# MF 1861

Monolith Freezer- Fully Integrated, panel ready

LIEBHERR

## Refrigeration and Freezing

GERMAN ENGINEERING

home.liebherr.com



| | MF 1861 |
|---|---|
| Energy consumption (kWh / y) | 381 |
| Estimated Yearly Energy Cost in US $[1] | 53 |
| Sound rating dB(A)[2] | 37 |
| Total capacity cu. ft. (l) | 7.8 (222) |
| Number of shelves | 4 |
| Number of door racks | 3 |
| Number of FrostSafe Drawers | 3 |
| Electronic control | InfinitySwipe |
| Freezer temperature range °F (°C) | +7 °F to -17 °F (-14 °C to -27 °C) |
| Defrost type | Automatic |
| Interior light | InfinityLight |
| Internal water dispenser | InfinitySpring |
| IceMaker | Fixed water connection |
| Ice cube output lbs. (kg.) | 3.5 (1.6) |
| Ice cube stock lbs. (kg.) | 4.0 (1.8) |
| Door hinges[3] | Left, reversible |
| **Product dimensions** | |
| in inch (H / W / D) | 83 3/4" / 17 3/4" / 24" |
| in cm (H / W / D) | 212.6 / 45 / 61 |
| **Cut out dimensions** | |
| in inch (H / W / D) | 84" / 18" / 25" |
| in cm (H / W / D) | 213.4 / 45.7 / 63.5 |
| Net weight lbs. (kg) | 302.0 (137.0) |
| Voltage V / Hz | 115/60 |

[1] Estimated energy cost will depend on utility rates and use.
Estimated energy cost based on a national average electricity cost of 14 cents per KWh.
[2]Noise output – according to EN 60704-3.
[3]Please contact your Liebherr Authorized Dealer for door reversal.

Subject to modification. For up-to-date information, visit home.liebherr.com
Specifications are for planning purposes only. For more detailed information, refer to installation instructions or Design Guide

November, 2025

## Accessories

| | |
|---|---|
| **Stainless-steel door panel 18"** | 9901 916 |
| **Monolith brushed aluminum square handle** | 9901 461 |
| **Monolith stainless steel round handle** | 9904 680 |
| **Monolith brushed aluminum soft-edge handle** | 9901 492 |
| **Stainless-steel Toe Kick 18"** | 9901 493 |
| **Water filter** | 9880 980 |
| **Anti-tip bracket wall mounted** | 9903 038 |

## Accessories for Side-by-Side installation

| | |
|---|---|
| **Side-by-Side kit (includes wall heater)** | 9901 428 |

Other stainless-steel Toe Kicks for Side-by-Side installation, please visit home.liebherr.com/monolith or refer to the accessory section on the Design Guide for more information.

## Features

**Infinity Swipe** Intuitive electronic touch-control panel features a full-color 3.5-inch touch & swipe screen that allows you to control every function.

**Infinity Light** Casts beautiful and even side lighting that can tuned according to personal taste, including a soft brightening effect upon opening the doors.

**Super Frost** Quick freeze just-bought groceries to preserve optimum food freshness, while sealing in flavors and maintaining essential vitamins and minerals.

**Ice Maker** Monolith's automatic IceMaker produces 1.6 kg (3.5 pounds) of filtered ice in 24 hours. Activate the SuperFrost function for an even greater production capability. With a 1.8 kg (4-pound) storage capacity, you'll never be without.

**Super Quiet** Noise levels are kept to a minimum thanks to virtually silent, speed-controlled and sound absorbing compressors.

# Diagrams

## Product Dimensions

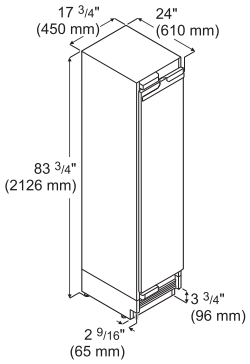


IMPORTANT!
Stated minimum height dimensions include when the leveled feet are fully inserted.

Height can be increased by a maximum of 1" (26 mm) by turning the adjustable feet. When the appliance is fitted in the recess, the appliance must be raised by turning the adjustable feet so that the appliance top has contact with the anti-tipping bracket. This results in a 4" (102 mm) Toe Kick height.

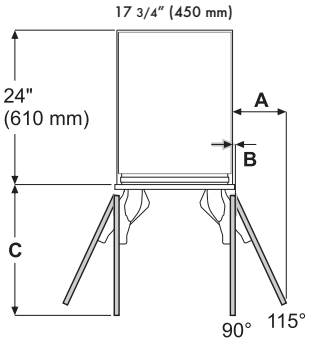


**Inset**
A = 8 1/4" (210 mm)
B = 1/2" (12.5 mm)
C = 19 7/8" (505 mm)

**Frameless**
A = 8 1/2" (216 mm)
B = 1/2" (12.5 mm)
C = 20 3/8" (517 mm)

Dimension A = without mounted door handle

## Cutout Dimensions

**Continuous Toe Kick**

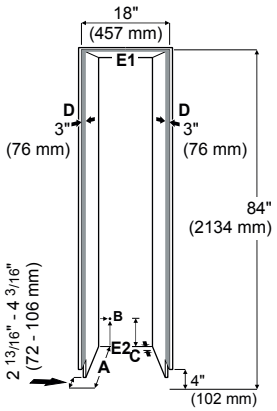


**Individual Toe Kick**

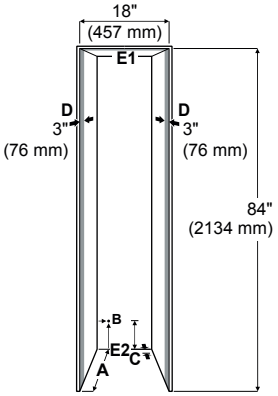


**A**
Cabinet depth frameless installation style = 25" (635 mm)
Cabinet depth inset installation style = 25" (635 mm) + panel thickness.
**B**
This is the point where the power cord exits from the appliance rear. 3/4" (19 mm) from the left and 5" (127 mm) from the floor. Free length of the power cord is 98" (2.5 m). We recommend the power outlet to be placed outside of the appliance opening. A 15 or 20 A, 110-120 VAC circuit grounded and protected by a circuit breaker or fuse is required.
**C**
The appliance has a recess in this area for cable and waterline laying. 1" (25 mm) in depth and 5 1/2" (140 mm) in height over the whole width of the appliance. The water pressure must be in the range of 40 - 90 psi. A shut-off valve must be installed between the water line and the main water supply. It must be easily accessible so the water supply can be stopped immediately if necessary.
**D**
This surface is visible when the appliance door is open. Designed finish is required.
**E1, E2**
Depending on the appliance, the anti-tipping bracket is positioned at the top (E1) or base (E2) of the appliance and must be secured to the wall or to the floor, please refer to the installation manual for more information.

## Door Panel Dimensions and dimensions of free length for power

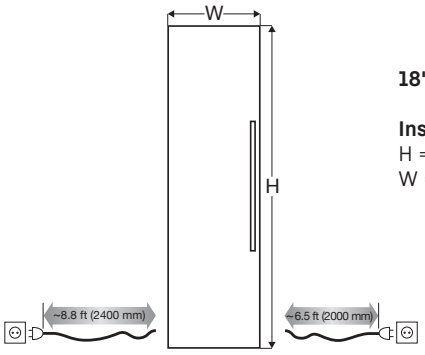


**18" recess**

**Inset installation style**
H = 79 7/8" (2029 mm)
W = 17 3/4" (451 mm)

**Frameless installation style**
H = 80" (2032 mm) Add overlapping dimension to the panel on the top.
W = 18" (457 mm) Add overlapping dimension to the panel on both sides.

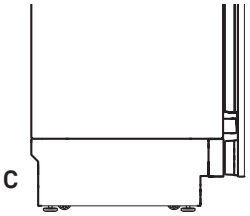


Panel thickness: Min. 5/8" (16 mm)* / Max. 1" (25.4 mm)
Panel and handle weight: Max. 55 lbs. (25 kg)
Ventilation takes place through the toe kick area. Door panels must be a minimum of 4" (102mm) above the floor.

* If a shaker style panel is used, which is thinner than the minimumpanel thickness, shorter screws than those supplied in the accessory pack must be used.