R 926 Litronic

LIEBHERR

Crawler excavator

Generation
8

Operating weight
26,500–28,950 kg

Engine
150 kW / 204 HP
Stage V

Bucket capacity
0.55–1.75 m³

Experience the progress R 926

① Safety

- Panoramic visibility with no obstructions and camera on the rear and the right side equipment
- Liftable console for easy and safe access to cab
- ROPS-certified cab structure: rollover protection
- Emergency exit via the rear cab window whatever the configuration of the excavator
- Right window and windshield in laminated and tinted glass

② Equipment

- Large choice of types and sizes of equipment
- Safety check valves for hoist and stick cylinders (option)
- Longer lifespan of components and higher productivity thanks to automatic centralised lubrication system

③ Maintenance

- Innovative servicing concept, with service points accessible from ground level
- Lateral access to uppercarriage and large maintenance platform
- Engine oil, hydraulic oil, fuel and urea levels visible on the display

④ Comfort

- Spacious, air-conditioned work space
- Pneumatic seat with vertical and horizontal suspension
- Easy-to-use high resolution 9" colour touchscreen
- Completely retractable front cab window
- LED lighting as standard

⑤ Engine

- Liebherr engine that conforms with the Stage V European exhaust emissions standard
- Automatic engine speed increase / decrease controlled by proximity sensors in the joysticks

⑥ Undercarriage

- Robust, reliable X-frame undercarriage, easy to secure thanks to its integrated eyelets
- Easy maintenance
- Maintenance-free travel gear and track rollers with lifetime lubrication
- Extra storage as an option

Technical data

Engine

Rating per ISO 9249	150 kW (204 HP) at 1,800 RPM
Torque	1,245 Nm at 1,100 RPM
Model	Liebherr D934 A7-25
Type	4 cylinder in-line
Bore	122 mm
Stroke	150 mm
Displacement	7.0 l
Engine operation	4-stroke diesel Common-Rail Turbo-charged and after-cooler
Exhaust gas treatment	Stage V DOC + SCR Filter Passive regeneration by thermo management
Cooling system	Water-cooled and oil cooler, after-cooled and fuel cooled
Air cleaner	Dry-type air cleaner with pre-cleaner
Fuel tank	620 l
Urea tank	90 l
Electrical system	
Voltage	24 V
Batteries	2 x 135 Ah / 12 V
Alternator	Three-phase current 24 V / 140 A
Engine idling	Sensor controlled

Hydraulic controls

Power distribution	Via control valves, simultaneous and independent actuation of undercarriage, swing drive and equipment
Electric servo circuit	Electro-hydraulic control
Equipment and swing	Proportional via joystick levers
Travel	– Proportional control via foot pedals or removable levers – Automatic or manual speed adjustment
Additional functions	Proportional regulation via foot pedals or mini-joystick

Hydraulic system

Hydraulic system	Positive Control hydraulic system. Demand-based, double independent pump flows Features high system dynamics and sensitivity provided by integrated system controlling Independent circuit for rotation
Hydraulic pumps	
For equipment and travel drive	Liebherr, variable displacement, swashplate double pump
Max. flow	2 x 265 l/min.
Max. pressure	380 bar
For swing drive	Swashplate pump, closed-loop circuit
Max. flow	200 l/min.
Max. pressure	365 bar
Pump management	Electronic management synchronous to the control block
Hydraulic tank	239 l
Hydraulic system	max. 475 l
Filtration	1 main return filter with integrated partial micro filtration (10 µm)
Cooling system	Compact cooler, consisting of a water cooler, with hydraulic oil cooler, gearbox oil cooler, fuel cooler and after-cooler cores and hydrostatically driven fan
MODE selection	Adjustment of engine and hydraulic performance via a mode pre-selector to match application, e.g. for especially economical and environmentally friendly operation or for maximum digging performance and heavy-duty jobs
Engine speed and performance setting	Stepless adjustment of engine output and hydraulic power via engine speed

Swing drive

Drive	Liebherr swashplate motor with integrated brake valve and torque control
Transmission	Liebherr compact planetary reduction gears
Swing ring	Liebherr, sealed race ball bearing swing ring, internal teeth
Swing speed	0–10.1 RPM stepless
Swing torque	90 kNm
Holding brake	Wet multi-disc (spring applied, pressure released)

Cab

Cab	ROPS safety cab structure (roll-over protection system according to ISO 12117-2:2008) with windscreen, totally or partially retractable (only upper part), under cab roof, LED headlights integrated in the ceiling, a door with a sliding window (can be opened on both sides), large storing box and several stowing possibilities, shock-absorbing suspension, laminated right hand side and roof windows, all windows tinted, separate extensible window shades for the sunroof window and windscreen, cigarette lighter and 24 V plug, 12 V plug, cup holder, mobile phone storage net
Operator's seat	Liebherr-Comfort seat, airsprung with automatic weight adjustment, vertical and longitudinal seat damping including consoles and joysticks. Seat and armrests adjustable separately and in combination (adjustable in length, height and inclination), seat heating as standard
Arm consoles	Oscillating consoles with seat, tiltable console left
Operation and displays	Large high-resolution operating unit, intuitive, colour display with touchscreen, video-compatible, numerous setting, control and monitoring options, e.g. air conditioning control, fuel consumption, machine and attachment parameters
Air-conditioning	Automatic air-conditioning, recirculated air function, fast de-icing and demisting at the press of a button, air vents can be operated via a menu. Recirculated air and fresh air filters can be easily replaced and are accessible from the outside. Heating-cooling unit, designed for extreme outside temperatures, sensors for solar radiation, inside and outside temperatures The air conditioning system contains fluorinated greenhouse gases
Refrigerant	R134a
Global warming potential	1,430
Quantity at 25 °C*	1,260 g
CO_2 equivalent	1.80 t
Vibration emission**	
Hand / arm vibrations	< 2.5 m/s², according with ISO 5349-1:2001
Whole-body vibrations	< 0.5 m/s²
Measuring inaccuracy	According with standard EN 12096:1997
Noise emission	
ISO 6396	70 dB(A) = L_{pA} (inside cab)
2000/14/EC	104 dB(A) = L_{WA} (surround noise)

Undercarriage

Versions	
XNLC	Gauge 2,240 mm
NLC	Gauge 2,390 mm
LC	Gauge 2,590 mm
Drive	Liebherr swashplate motor with brake valves on both sides
Transmission	Liebherr planetary reduction gear
Maximum travel speed	3.9 km/h low range 6.1 km/h high range
Drawbar pull on crawler	236 kN
Track components	B60, D6C, maintenance-free
Track rollers / Carrier rollers	9 / 2
Tracks	Sealed and greased
Track pads	Triple grouser
Holding brake	Wet multi-disc (spring applied, pressure released)
Brake valves	Integrated into travel motor
Lashing eyes	Integrated

Equipment

Type	Combination of resistant steel plates and cast steel components
Hydraulic cylinders	Liebherr cylinders with seal and guidance systems
Bearings	Sealed, low maintenance
Lubrication	Liebherr central lubrication system
Hydraulic connections	Pipes and hoses equipped with SAE split-flange connections
Buckets	Standard equipped with Liebherr tooth system

* Valid for standard machine without operator's cab elevation and without height adjustable cab
** For the risk assessment according to 2002/44/EC see ISO/TR 25398:2006

Dimensions

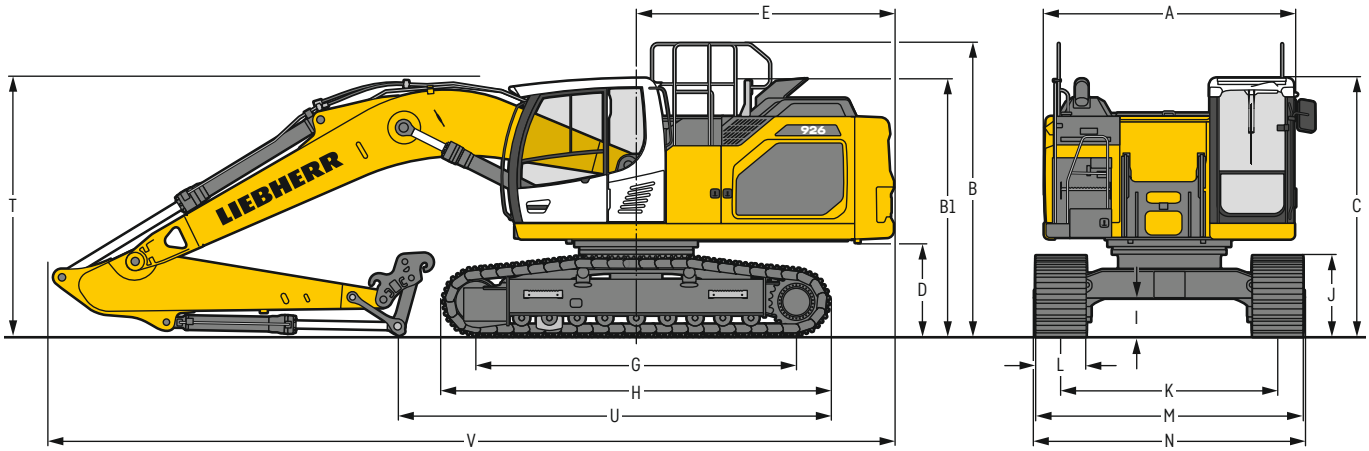

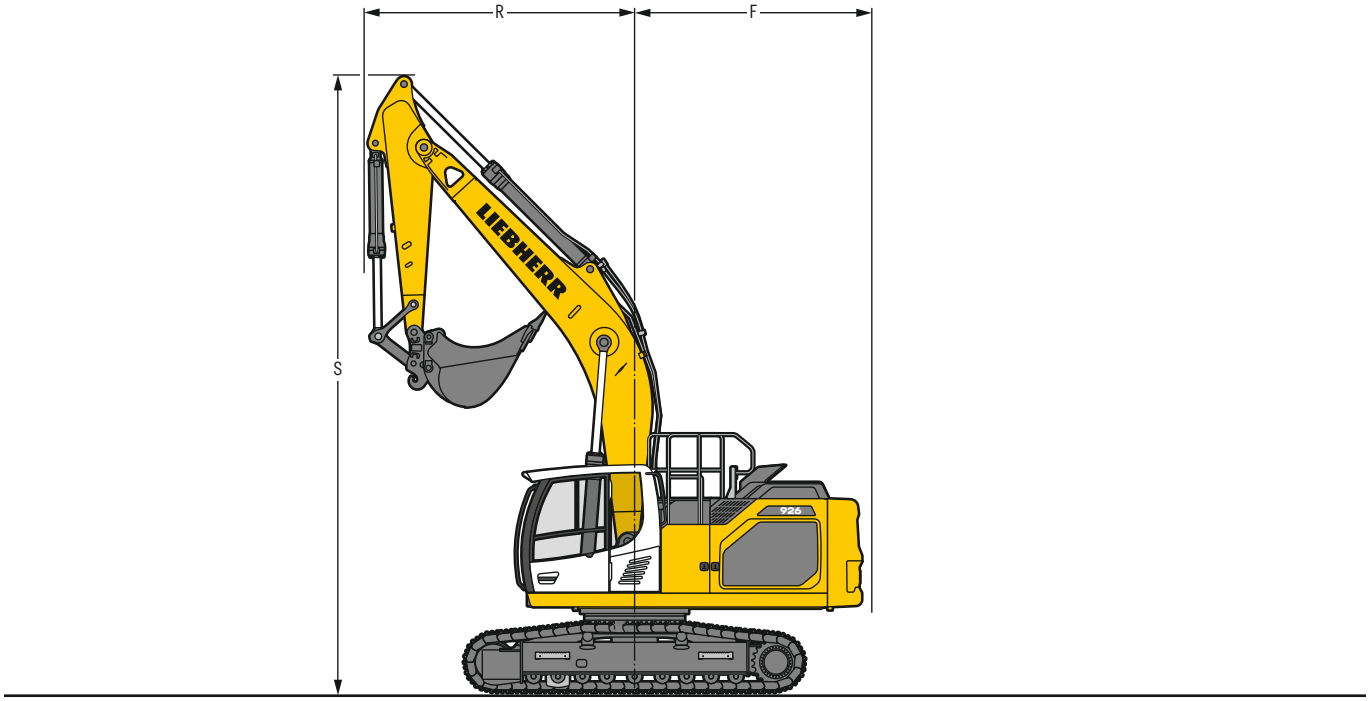

		XNLC				mm	NLC				mm	LC				mm
A	Uppercarriage width					2,990[2]					2,990[2]					2,990[2]
B	Uppercarriage height					3,510					3,510					3,510
B1	Uppercarriage height (handrails folded)					3,075					3,075					3,075
C	Cab height					3,090					3,090					3,090
D	Counterweight ground clearance					1,115					1,115					1,115
E	Rear-end length					3,075					3,075					3,075
F	Tail swing radius					3,200					3,200					3,200
G	Wheelbase					3,830					3,830					3,830
H	Undercarriage length					4,625					4,625					4,625
I	Undercarriage ground clearance					495					495					495
J	Track height					965					965					965
K	Track gauge					2,240					2,390					2,590
L	Track pad width	600	700	750	800		600	700	750	800	900	600	700	750	800	900
M	Width over tracks	2,840	2,940	2,990	3,040		2,990	3,090	3,140	3,190	3,290	3,190	3,290	3,340	3,390	3,490
N	Width over steps	2,775	2,975[1]	2,975[1]	2,975[1]		2,925	3,125[1]	3,125[1]	3,125[1]	3,225[1]	3,125	3,325[1]	3,325[1]	3,325[1]	3,425[1]

[1] width with removable steps
[2] without door stop device and spacer

		Stick length	Mono boom 6.00 m with quick coupler	Mono boom straight 6.20 m with quick coupler	Two-piece boom 6.20 m with quick coupler
		m	mm	mm	mm
R	Front swing radius	2.50	3,650	3,100	3,000
		3.00	3,650	3,100	2,900
		3.50	3,650	3,100	2,850
S	Height with boom up		8,350	8,950	9,200
T	Boom height	2.50	3,000	2,900	2,850
		3.00	3,100	3,050	3,000
		3.50	3,100	3,200	3,100
U	Length on ground	2.50	8,350	6,100	6,000
		3.00	5,150	5,750	5,700
		3.50	4,650	5,350	5,300
V	Overall length		10,100	10,450	10,400
	Bucket		1.45 m³	1.45 m³	1.45 m³

Transport dimensions

removable elements disassembled

	Undercarriage	Mono boom 6.00 m					Mono boom straight 6.20 m					Two-piece boom 6.20 m				
		mm					mm					mm				
Pad width		600	700	750	800	900	600	700	750	800	900	600	700	750	800	900
Transport width	XNLC	2,990	2,990	2,990	3,040	–	2,990	2,990	2,990	3,040	–	2,990	2,990	2,990	3,040	–
	NLC	2,990	2,990	3,140	3,190	3,290	2,990	2,990	3,140	3,190	3,290	2,990	2,990	3,140	3,190	3,290
	LC	3,190	3,290	3,340	3,390	3,490	3,190	3,290	3,340	3,390	3,490	3,190	3,290	3,340	3,390	3,490

	Undercarriage / Stick	XNLC / NLC / LC	XNLC / NLC / LC	XNLC / NLC / LC
	m	mm	mm	mm
Transport length		10,100	10,450	10,400
Transport height	2.50	3,090	3,090	3,090
	3.00	3,100	3,090	3,090
	3.50	3,100	3,200	3,100

Backhoe bucket

with mono boom 6.00 m

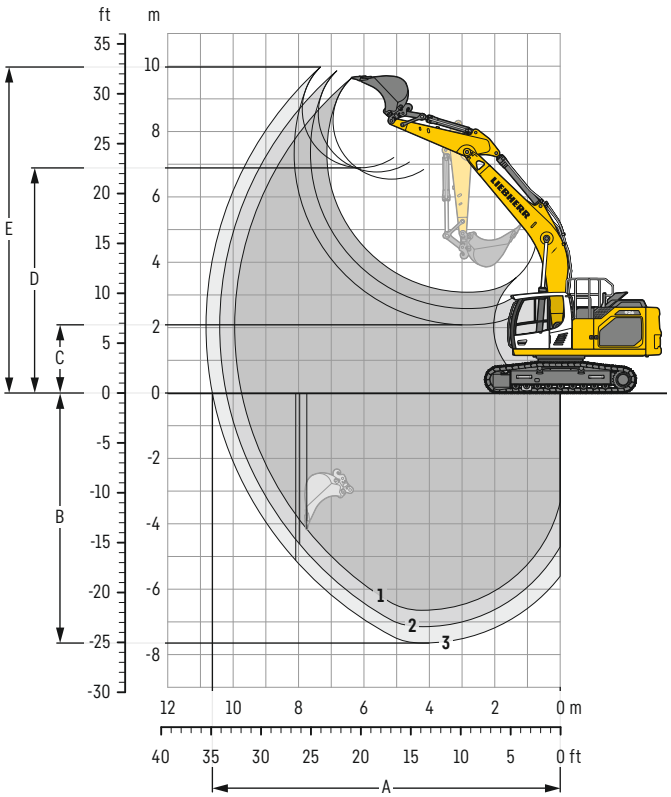

Digging envelope

with quick coupler		1	2	3
Stick length	m	2.50	3.00	3.50
A Max. reach at ground level	m	9.74	10.21	10.63
B Max. digging depth	m	6.64	7.14	7.64
C Min. dumping height	m	3.09	2.59	2.09
D Max. dumping height	m	6.54	6.76	6.89
E Max. cutting height	m	9.64	9.85	9.97

Forces

without quick coupler		1	2	3
Stick digging force (ISO 6015)	kN	152	134	120
Bucket digging force (ISO 6015)	kN	187	187	187
Stick digging force (SAE J1179)	kN	145	129	116
Bucket digging force (SAE J1179)	kN	166	166	166

Operating weight and ground pressure

The operating weight includes the basic machine with counterweight 4.6 t, mono boom 6.00 m, stick 3.00 m, quick coupler SWA 48 (250 kg) and bucket 1.45 m³ (910 kg).

Undercarriage		XNLC				
Pad width	mm	600	700	750	800	900
Weight	kg	26,500	26,750	26,900	27,050	–
Ground pressure	kg/cm²	0.54	0.47	0.44	0.41	–

Undercarriage		NLC				
Pad width	mm	600	700	750	800	900
Weight	kg	26,550	26,800	26,950	27,100	27,400
Ground pressure	kg/cm²	0.54	0.47	0.44	0.41	0.37

Undercarriage		LC				
Pad width	mm	600	700	750	800	900
Weight	kg	26,650	26,900	27,050	27,200	27,500
Ground pressure	kg/cm²	0.54	0.47	0.44	0.41	0.37

The operating weight includes the basic machine with counterweight 5.1 t, mono boom 6.00 m, stick 3.00 m, quick coupler SWA 48 (250 kg) and bucket 1.45 m³ (910 kg).

Undercarriage		XNLC				
Pad width	mm	600	700	750	800	900
Weight	kg	27,000	27,250	27,400	27,550	–
Ground pressure	kg/cm²	0.55	0.47	0.44	0.42	–

Undercarriage		NLC				
Pad width	mm	600	700	750	800	900
Weight	kg	27,050	27,300	27,450	27,600	27,900
Ground pressure	kg/cm²	0.55	0.47	0.45	0.42	0.38

Undercarriage		LC				
Pad width	mm	600	700	750	800	900
Weight	kg	27,150	27,400	27,550	27,700	28,000
Ground pressure	kg/cm²	0.55	0.48	0.45	0.42	0.38

Buckets Machine stability per ISO 10567* (75 % of tipping capacity)

	Cutting width	Capacity ISO 7451	Weight[3]	Weight[4]	XNLC undercarriage (with track pads 600 mm)						NLC undercarriage (with track pads 600 mm)						LC undercarriage (with track pads 600 mm)					
					Stick length (m)						Stick length (m)						Stick length (m)					
					without quick coupler			with quick coupler			without quick coupler			with quick coupler			without quick coupler			with quick coupler		
	mm	m³	kg	kg	2.50	3.00	3.50	2.50	3.00	3.50	2.50	3.00	3.50	2.50	3.00	3.50	2.50	3.00	3.50	2.50	3.00	3.50
with counterweight 4.6 t																						
STD[1]	650	0.55	580	590	▲	▲	▲	▲	▲	▲	▲	▲	▲	▲	▲	▲	▲	▲	▲	▲	▲	▲
	850	0.75	620	640	▲	▲	▲	▲	▲	▲	▲	▲	▲	▲	▲	▲	▲	▲	▲	▲	▲	▲
	1,050	0.95	710	740	▲	▲	▲	▲	▲	▲	▲	▲	▲	▲	▲	▲	▲	▲	▲	▲	▲	▲
	1,250	1.15	810	830	▲	▲	▲	▲	▲	▲	▲	▲	▲	▲	▲	▲	▲	▲	▲	▲	▲	▲
	1,250	1.25	890	910	▲	▲	■	▲	▲	■	▲	▲	▲	▲	▲	▲	▲	▲	▲	▲	▲	▲
	1,400	1.35	850	880	▲	▲	■	▲	■	▲	▲	▲	▲	▲	▲	■	▲	▲	▲	▲	▲	▲
	1,500	1.45	910	910	▲	■	▲	▲	■	■	▲	▲	■	▲	▲	▲	▲	▲	▲	▲	▲	▲
	1,600	1.55	950	970	■	▲	■	■	▲	△	▲	■	▲	▲	■	■	▲	▲	■	▲	▲	■
	1,500	1.65	1,020	1,020	■	■	△	▲	■	△	■	▲	■	■	▲	■	▲	■	▲	▲	■	▲
	1,600	1.75	1,060	1,080	▲	■	△	▲	△	△	■	▲	△	■	■	△	▲	■	▲	▲	▲	■
HD[2]	650	0.55	640	650	▲	▲	▲	▲	▲	▲	▲	▲	▲	▲	▲	▲	▲	▲	▲	▲	▲	▲
	850	0.75	690	720	▲	▲	▲	▲	▲	▲	▲	▲	▲	▲	▲	▲	▲	▲	▲	▲	▲	▲
	1,050	0.95	800	830	▲	▲	▲	▲	▲	▲	▲	▲	▲	▲	▲	▲	▲	▲	▲	▲	▲	▲
	1,250	1.15	910	940	▲	▲	▲	▲	▲	▲	▲	▲	▲	▲	▲	▲	▲	▲	▲	▲	▲	▲
	1,250	1.25	1,010	1,030	▲	▲	■	▲	▲	■	▲	▲	▲	▲	▲	■	▲	▲	▲	▲	▲	▲
	1,400	1.35	970	990	▲	▲	▲	▲	■	▲	▲	▲	■	▲	▲	■	▲	▲	▲	▲	▲	▲
	1,500	1.45	1,030	1,030	▲	■	■	▲	▲	■	▲	▲	▲	▲	■	▲	▲	▲	▲	▲	▲	■
	1,600	1.55	1,070	1,090	■	▲	■	■	■	△	▲	■	▲	▲	▲	■	▲	▲	■	▲	▲	▲
	1,500	1.65	1,160	1,160	▲	■	△	▲	△	△	■	▲	■	■	■	△	▲	■	▲	▲	■	■
	1,600	1.75	1,220	1,230	■	△	△	■	△	△	▲	■	△	▲	■	△	▲	▲	■	■	▲	■
with counterweight 5.1 t																						
STD[1]	650	0.55	580	590	▲	▲	▲	▲	▲	▲	▲	▲	▲	▲	▲	▲	▲	▲	▲	▲	▲	▲
	850	0.75	620	640	▲	▲	▲	▲	▲	▲	▲	▲	▲	▲	▲	▲	▲	▲	▲	▲	▲	▲
	1,050	0.95	710	740	▲	▲	▲	▲	▲	▲	▲	▲	▲	▲	▲	▲	▲	▲	▲	▲	▲	▲
	1,250	1.15	810	830	▲	▲	▲	▲	▲	▲	▲	▲	▲	▲	▲	▲	▲	▲	▲	▲	▲	▲
	1,250	1.25	890	910	▲	▲	▲	▲	▲	▲	▲	▲	▲	▲	▲	▲	▲	▲	▲	▲	▲	▲
	1,400	1.35	850	880	▲	▲	▲	▲	▲	■	▲	▲	▲	▲	▲	▲	▲	▲	▲	▲	▲	▲
	1,500	1.45	910	910	▲	▲	■	▲	■	▲	▲	▲	▲	▲	▲	■	▲	▲	▲	▲	▲	▲
	1,600	1.55	950	970	▲	■	▲	▲	■	■	▲	▲	■	▲	■	▲	▲	▲	▲	▲	▲	■
	1,500	1.65	1,020	1,020	■	▲	■	■	▲	■	▲	■	▲	▲	■	■	▲	▲	■	▲	▲	■
	1,600	1.75	1,060	1,080	■	■	△	▲	■	△	▲	▲	■	■	▲	■	▲	■	▲	▲	■	▲
HD[2]	650	0.55	640	650	▲	▲	▲	▲	▲	▲	▲	▲	▲	▲	▲	▲	▲	▲	▲	▲	▲	▲
	850	0.75	690	720	▲	▲	▲	▲	▲	▲	▲	▲	▲	▲	▲	▲	▲	▲	▲	▲	▲	▲
	1,050	0.95	800	830	▲	▲	▲	▲	▲	▲	▲	▲	▲	▲	▲	▲	▲	▲	▲	▲	▲	▲
	1,250	1.15	910	940	▲	▲	▲	▲	▲	▲	▲	▲	▲	▲	▲	▲	▲	▲	▲	▲	▲	▲
	1,250	1.25	1,010	1,030	▲	▲	▲	▲	▲	■	▲	▲	▲	▲	▲	▲	▲	▲	▲	▲	▲	▲
	1,400	1.35	970	990	▲	▲	■	▲	▲	■	▲	▲	▲	▲	▲	▲	▲	▲	▲	▲	▲	▲
	1,500	1.45	1,030	1,030	▲	■	▲	▲	■	▲	▲	▲	■	▲	▲	■	▲	▲	▲	▲	▲	▲
	1,600	1.55	1,070	1,090	▲	■	■	▲	▲	■	▲	▲	▲	▲	■	▲	▲	▲	▲	▲	▲	■
	1,500	1.65	1,160	1,160	■	▲	■	■	■	△	▲	■	■	▲	▲	■	▲	▲	■	▲	■	▲
	1,600	1.75	1,220	1,230	▲	■	△	▲	■	△	■	▲	■	■	▲	△	▲	■	▲	▲	■	■

* Indicated loads are based on ISO 10567, at maximum reach, and may be swung 360° on firm and even ground
1) Standard bucket with teeth Z 40
2) HD bucket with teeth Z 40
3) Bucket for direct mounting
4) Bucket for mounting to quick coupler SWA 48 (250 kg)
Other buckets available upon request

Max. material weight ▲ = ≤ 2.0 t/m³, ■ = ≤ 1.8 t/m³, ▲ = ≤ 1.65 t/m³, ■ = ≤ 1.5 t/m³, △ = ≤ 1.2 t/m³

Backhoe bucket

with mono boom straight 6.20 m

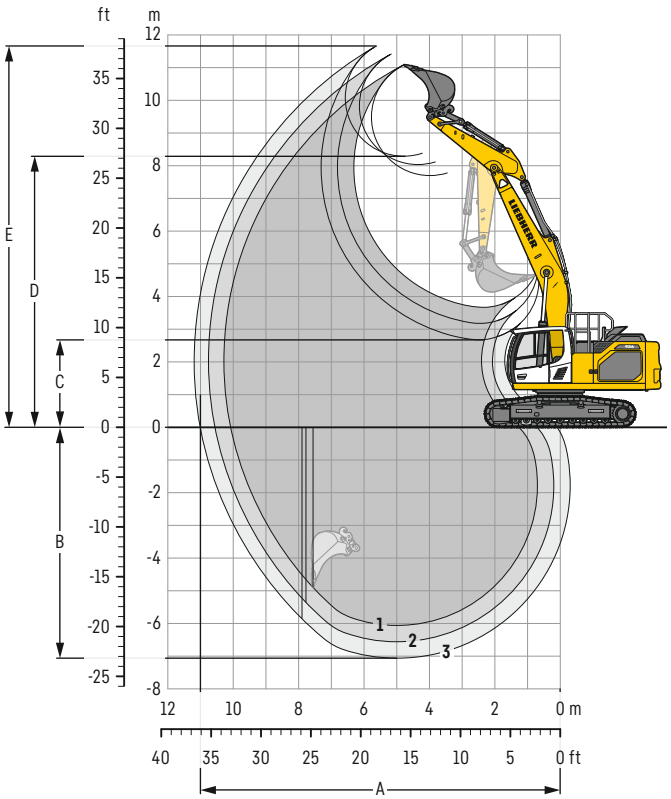

Digging envelope

with quick coupler		1	2	3
Stick length	m	2.50	3.00	3.50
A Max. reach at ground level	m	10.08	10.56	11.00
B Max. digging depth	m	6.06	6.56	7.06
C Min. dumping height	m	3.67	3.18	2.67
D Max. dumping height	m	7.70	8.04	8.30
E Max. cutting height	m	11.08	11.42	11.66

Forces

without quick coupler		1	2	3
Stick digging force (ISO 6015)	kN	152	134	120
Bucket digging force (ISO 6015)	kN	187	187	187
Stick digging force (SAE J1179)	kN	145	129	116
Bucket digging force (SAE J1179)	kN	166	166	166

Operating weight and ground pressure

The operating weight includes the basic machine with counterweight 4.6 t, mono boom straight 6.20 m, stick 3.00 m, quick coupler SWA 48 (250 kg) and bucket 1.45 m³ (910 kg).

Undercarriage		XNLC				
Pad width	mm	600	700	750	800	900
Weight	kg	26,550	26,800	26,950	27,100	–
Ground pressure	kg/cm²	0.54	0.47	0.44	0.41	–

Undercarriage		NLC				
Pad width	mm	600	700	750	800	900
Weight	kg	26,600	26,850	27,000	27,150	27,450
Ground pressure	kg/cm²	0.54	0.47	0.44	0.41	0.37

Undercarriage		LC				
Pad width	mm	600	700	750	800	900
Weight	kg	26,700	26,950	27,100	27,250	27,550
Ground pressure	kg/cm²	0.54	0.47	0.44	0.41	0.37

The operating weight includes the basic machine with counterweight 5.1 t, mono boom straight 6.20 m, stick 3.00 m, quick coupler SWA 48 (250 kg) and bucket 1.45 m³ (910 kg).

Undercarriage		XNLC				
Pad width	mm	600	700	750	800	900
Weight	kg	27,050	27,300	27,450	27,600	–
Ground pressure	kg/cm²	0.55	0.47	0.45	0.42	–

Undercarriage		NLC				
Pad width	mm	600	700	750	800	900
Weight	kg	27,100	27,350	27,500	27,650	27,950
Ground pressure	kg/cm²	0.55	0.48	0.45	0.42	0.38

Undercarriage		LC				
Pad width	mm	600	700	750	800	900
Weight	kg	27,200	27,450	27,600	27,750	28,050
Ground pressure	kg/cm²	0.55	0.48	0.45	0.42	0.38

Buckets Machine stability per ISO 10567* (75 % of tipping capacity)

	Cutting width	Capacity ISO 7451	Weight[3]	Weight[4]	XNLC undercarriage (with track pads 600 mm)						NLC undercarriage (with track pads 600 mm)						LC undercarriage (with track pads 600 mm)					
					Stick length (m)						Stick length (m)						Stick length (m)					
					without quick coupler			with quick coupler			without quick coupler			with quick coupler			without quick coupler			with quick coupler		
	mm	m³	kg	kg	2.50	3.00	3.50	2.50	3.00	3.50	2.50	3.00	3.50	2.50	3.00	3.50	2.50	3.00	3.50	2.50	3.00	3.50
with counterweight 4.6 t																						
STD[1]	650	0.55	580	590	▲	▲	▲	▲	▲	▲	▲	▲	▲	▲	▲	▲	▲	▲	▲	▲	▲	▲
	850	0.75	620	640	▲	▲	▲	▲	▲	▲	▲	▲	▲	▲	▲	▲	▲	▲	▲	▲	▲	▲
	1,050	0.95	710	740	▲	▲	▲	▲	▲	▲	▲	▲	▲	▲	▲	▲	▲	▲	▲	▲	▲	▲
	1,250	1.15	810	830	▲	▲	■	▲	▲	■	▲	▲	▲	▲	▲	▲	▲	▲	▲	▲	▲	▲
	1,250	1.25	890	910	▲	■	▲	▲	■	▲	▲	▲	■	▲	▲	■	▲	▲	▲	▲	▲	▲
	1,400	1.35	850	880	▲	■	▲	▲	▲	■	▲	▲	■	▲	■	▲	▲	▲	▲	▲	▲	■
	1,500	1.45	910	910	■	▲	■	■	■	△	▲	■	▲	▲	▲	■	▲	▲	■	▲	▲	▲
	1,600	1.55	950	970	▲	■	△	▲	△	△	■	▲	■	■	■	△	▲	■	▲	▲	■	■
	1,500	1.65	1,020	1,020	▲	△	△	■	△	△	■	■	△	▲	■	△	▲	▲	■	■	▲	■
	1,600	1.75	1,060	1,080	■	△	—	△	△	—	▲	△	△	■	△	△	■	▲	△	■	■	△
HD[2]	650	0.55	640	650	▲	▲	▲	▲	▲	▲	▲	▲	▲	▲	▲	▲	▲	▲	▲	▲	▲	▲
	850	0.75	690	720	▲	▲	▲	▲	▲	▲	▲	▲	▲	▲	▲	▲	▲	▲	▲	▲	▲	▲
	1,050	0.95	800	830	▲	▲	▲	▲	▲	▲	▲	▲	▲	▲	▲	▲	▲	▲	▲	▲	▲	▲
	1,250	1.15	910	940	▲	▲	■	▲	▲	▲	▲	▲	▲	▲	▲	■	▲	▲	▲	▲	▲	▲
	1,250	1.25	1,010	1,030	▲	■	▲	▲	■	■	▲	▲	■	▲	▲	▲	▲	▲	▲	▲	▲	■
	1,400	1.35	970	990	▲	■	■	■	▲	△	▲	■	▲	▲	■	▲	▲	▲	■	▲	▲	■
	1,500	1.45	1,030	1,030	■	▲	△	■	■	△	▲	■	■	■	▲	■	▲	▲	■	▲	■	▲
	1,600	1.55	1,070	1,090	▲	■	△	▲	△	△	■	▲	△	■	■	△	▲	■	▲	▲	▲	■
	1,500	1.65	1,160	1,160	■	△	△	■	△	—	▲	■	△	▲	△	△	■	▲	■	■	▲	△
	1,600	1.75	1,220	1,230	△	△	—	△	△	—	■	△	△	■	△	—	■	■	△	▲	■	△
with counterweight 5.1 t																						
STD[1]	650	0.55	580	590	▲	▲	▲	▲	▲	▲	▲	▲	▲	▲	▲	▲	▲	▲	▲	▲	▲	▲
	850	0.75	620	640	▲	▲	▲	▲	▲	▲	▲	▲	▲	▲	▲	▲	▲	▲	▲	▲	▲	▲
	1,050	0.95	710	740	▲	▲	▲	▲	▲	▲	▲	▲	▲	▲	▲	▲	▲	▲	▲	▲	▲	▲
	1,250	1.15	810	830	▲	▲	▲	▲	▲	▲	▲	▲	▲	▲	▲	▲	▲	▲	▲	▲	▲	▲
	1,250	1.25	890	910	▲	▲	■	▲	▲	■	▲	▲	▲	▲	▲	■	▲	▲	▲	▲	▲	▲
	1,400	1.35	850	880	▲	▲	■	▲	■	▲	▲	▲	■	▲	▲	■	▲	▲	▲	▲	▲	▲
	1,500	1.45	910	910	▲	■	▲	▲	▲	■	▲	▲	■	▲	■	▲	▲	▲	▲	▲	▲	■
	1,600	1.55	950	970	■	▲	■	■	■	△	▲	■	▲	▲	▲	■	▲	▲	■	▲	■	▲
	1,500	1.65	1,020	1,020	■	■	△	▲	■	△	■	▲	■	■	▲	△	▲	■	▲	▲	■	■
	1,600	1.75	1,060	1,080	▲	△	△	■	△	△	■	■	△	▲	■	△	▲	■	■	■	▲	■
HD[2]	650	0.55	640	650	▲	▲	▲	▲	▲	▲	▲	▲	▲	▲	▲	▲	▲	▲	▲	▲	▲	▲
	850	0.75	690	720	▲	▲	▲	▲	▲	▲	▲	▲	▲	▲	▲	▲	▲	▲	▲	▲	▲	▲
	1,050	0.95	800	830	▲	▲	▲	▲	▲	▲	▲	▲	▲	▲	▲	▲	▲	▲	▲	▲	▲	▲
	1,250	1.15	910	940	▲	▲	▲	▲	▲	■	▲	▲	▲	▲	▲	▲	▲	▲	▲	▲	▲	▲
	1,250	1.25	1,010	1,030	▲	▲	■	▲	■	▲	▲	▲	▲	▲	▲	■	▲	▲	▲	▲	▲	▲
	1,400	1.35	970	990	▲	■	▲	▲	■	■	▲	▲	■	▲	▲	■	▲	▲	▲	▲	▲	▲
	1,500	1.45	1,030	1,030	▲	■	■	■	▲	■	▲	■	▲	▲	■	▲	▲	▲	■	▲	▲	■
	1,600	1.55	1,070	1,090	■	▲	△	■	■	△	▲	■	■	■	▲	■	▲	▲	■	▲	■	▲
	1,500	1.65	1,160	1,160	▲	■	△	▲	△	△	■	▲	△	■	■	△	▲	■	▲	▲	▲	■
	1,600	1.75	1,220	1,230	■	△	△	■	△	—	▲	■	△	▲	△	△	■	▲	■	■	▲	△

* Indicated loads are based on ISO 10567, at maximum reach, and may be swung 360° on firm and even ground
[1] Standard bucket with teeth Z 40
[2] HD bucket with teeth Z 40
[3] Bucket for direct mounting
[4] Bucket for mounting to quick coupler SWA 48 (250 kg)
Other buckets available upon request

Max. material weight ▲ = ≤ 2.0 t/m³, ■ = ≤ 1.8 t/m³, ▲ = ≤ 1.65 t/m³, ■ = ≤ 1.5 t/m³, △ = ≤ 1.2 t/m³, — = not authorised

Backhoe bucket

with two-piece boom 6.20 m

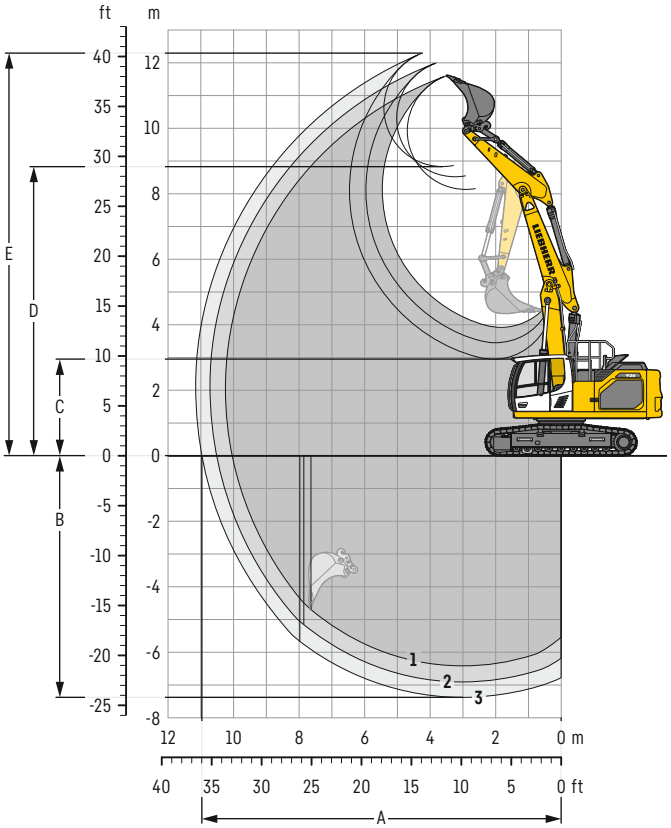

Digging envelope

with quick coupler		1	2	3
Stick length	m	2.50	3.00	3.50
A Max. reach at ground level	m	10.04	10.52	10.97
B Max. digging depth	m	6.42	6.91	7.38
C Min. dumping height	m	3.92	3.45	2.95
D Max. dumping height	m	8.13	8.52	8.83
E Max. cutting height	m	11.60	11.99	12.29

Forces

without quick coupler		1	2	3
Stick digging force (ISO 6015)	kN	152	134	120
Bucket digging force (ISO 6015)	kN	187	187	187
Stick digging force (SAE J1179)	kN	145	129	116
Bucket digging force (SAE J1179)	kN	166	166	166

Operating weight and ground pressure

The operating weight includes the basic machine with counterweight 4.6 t, two-piece boom 6.20 m, stick 3.00 m, quick coupler SWA 48 (250 kg) and bucket 1.45 m³ (910 kg).

Undercarriage		XNLC				
Pad width	mm	600	700	750	800	900
Weight	kg	27,450	27,700	27,850	28,000	–
Ground pressure	kg/cm²	0.56	0.48	0.45	0.43	–

Undercarriage		NLC				
Pad width	mm	600	700	750	800	900
Weight	kg	27,500	27,750	27,900	28,050	28,350
Ground pressure	kg/cm²	0.56	0.48	0.45	0.43	0.38

Undercarriage		LC				
Pad width	mm	600	700	750	800	900
Weight	kg	27,600	27,850	28,000	28,150	28,450
Ground pressure	kg/cm²	0.56	0.48	0.45	0.43	0.38

The operating weight includes the basic machine with counterweight 5.1 t, two-piece boom 6.20 m, stick 3.00 m, quick coupler SWA 48 (250 kg) and bucket 1.45 m³ (910 kg).

Undercarriage		XNLC				
Pad width	mm	600	700	750	800	900
Weight	kg	27,950	28,200	28,350	28,500	–
Ground pressure	kg/cm²	0.57	0.49	0.46	0.43	–

Undercarriage		NLC				
Pad width	mm	600	700	750	800	900
Weight	kg	28,000	28,250	28,400	28,550	28,850
Ground pressure	kg/cm²	0.57	0.49	0.46	0.43	0.39

Undercarriage		LC				
Pad width	mm	600	700	750	800	900
Weight	kg	28,100	28,350	28,500	28,650	28,950
Ground pressure	kg/cm²	0.57	0.49	0.46	0.44	0.39

Buckets Machine stability per ISO 10567* (75 % of tipping capacity)

	Cutting width	Capacity ISO 7451	Weight[3]	Weight[4]	XNLC undercarriage (with track pads 600 mm)						NLC undercarriage (with track pads 600 mm)						LC undercarriage (with track pads 600 mm)					
					Stick length (m)						Stick length (m)						Stick length (m)					
					without quick coupler			with quick coupler			without quick coupler			with quick coupler			without quick coupler			with quick coupler		
	mm	m³	kg	kg	2.50	3.00	3.50	2.50	3.00	3.50	2.50	3.00	3.50	2.50	3.00	3.50	2.50	3.00	3.50	2.50	3.00	3.50
with counterweight 4.6 t																						
STD[1]	650	0.55	580	590	▲	▲	▲	▲	▲	▲	▲	▲	▲	▲	▲	▲	▲	▲	▲	▲	▲	▲
	850	0.75	620	640	▲	▲	▲	▲	▲	▲	▲	▲	▲	▲	▲	▲	▲	▲	▲	▲	▲	▲
	1,050	0.95	710	740	▲	▲	▲	▲	▲	▲	▲	▲	▲	▲	▲	▲	▲	▲	▲	▲	▲	▲
	1,250	1.15	810	830	▲	▲	■	▲	▲	■	▲	▲	▲	▲	▲	▲	▲	▲	▲	▲	▲	▲
	1,250	1.25	890	910	▲	■	▲	▲	■	■	▲	▲	■	▲	▲	■	▲	▲	▲	▲	▲	▲
	1,400	1.35	850	880	▲	■	■	■	▲	■	▲	▲	▲	▲	■	▲	▲	▲	▲	▲	▲	■
	1,500	1.45	910	910	■	▲	△	■	■	△	▲	■	■	▲	▲	■	▲	▲	■	▲	■	▲
	1,600	1.55	950	970	▲	■	△	▲	△	△	■	▲	■	■	■	△	▲	■	▲	▲	■	■
	1,500	1.65	1,020	1,020	■	△	△	■	△	—	▲	■	△	▲	△	△	■	▲	■	■	▲	■
	1,600	1.75	1,060	1,080	■	△	—	△	△	—	▲	△	△	■	△	△	■	■	△	▲	■	△
HD[2]	650	0.55	640	650	▲	▲	▲	▲	▲	▲	▲	▲	▲	▲	▲	▲	▲	▲	▲	▲	▲	▲
	850	0.75	690	720	▲	▲	▲	▲	▲	▲	▲	▲	▲	▲	▲	▲	▲	▲	▲	▲	▲	▲
	1,050	0.95	800	830	▲	▲	▲	▲	▲	▲	▲	▲	▲	▲	▲	▲	▲	▲	▲	▲	▲	▲
	1,250	1.15	910	940	▲	▲	■	▲	■	▲	▲	▲	▲	▲	▲	■	▲	▲	▲	▲	▲	▲
	1,250	1.25	1,010	1,030	▲	■	▲	▲	▲	■	▲	▲	■	▲	■	▲	▲	▲	▲	▲	▲	■
	1,400	1.35	970	990	▲	▲	■	■	▲	△	▲	■	▲	▲	■	■	▲	▲	■	▲	▲	■
	1,500	1.45	1,030	1,030	■	■	△	▲	■	△	▲	▲	■	■	▲	△	▲	▲	▲	▲	■	▲
	1,600	1.55	1,070	1,090	▲	△	△	■	△	△	■	■	△	▲	■	△	▲	■	■	▲	▲	■
	1,500	1.65	1,160	1,160	■	△	—	△	△	—	▲	■	△	▲	△	△	■	▲	■	■	■	△
	1,600	1.75	1,220	1,230	△	△	—	△	—	—	■	△	△	■	△	—	▲	■	△	▲	■	△
with counterweight 5.1 t																						
STD[1]	650	0.55	580	590	▲	▲	▲	▲	▲	▲	▲	▲	▲	▲	▲	▲	▲	▲	▲	▲	▲	▲
	850	0.75	620	640	▲	▲	▲	▲	▲	▲	▲	▲	▲	▲	▲	▲	▲	▲	▲	▲	▲	▲
	1,050	0.95	710	740	▲	▲	▲	▲	▲	▲	▲	▲	▲	▲	▲	▲	▲	▲	▲	▲	▲	▲
	1,250	1.15	810	830	▲	▲	▲	▲	▲	■	▲	▲	▲	▲	▲	▲	▲	▲	▲	▲	▲	▲
	1,250	1.25	890	910	▲	▲	■	▲	▲	▲	▲	▲	▲	▲	▲	■	▲	▲	▲	▲	▲	▲
	1,400	1.35	850	880	▲	■	▲	▲	■	▲	▲	▲	■	▲	▲	■	▲	▲	▲	▲	▲	▲
	1,500	1.45	910	910	▲	■	■	■	▲	■	▲	■	▲	▲	■	▲	▲	▲	■	▲	▲	■
	1,600	1.55	950	970	■	▲	△	■	■	△	▲	■	■	■	▲	■	▲	▲	■	▲	■	▲
	1,500	1.65	1,020	1,020	▲	■	△	▲	△	△	■	▲	■	■	■	△	▲	■	▲	▲	■	■
	1,600	1.75	1,060	1,080	■	△	△	■	△	—	▲	■	△	▲	■	△	■	▲	■	■	▲	■
HD[2]	650	0.55	640	650	▲	▲	▲	▲	▲	▲	▲	▲	▲	▲	▲	▲	▲	▲	▲	▲	▲	▲
	850	0.75	690	720	▲	▲	▲	▲	▲	▲	▲	▲	▲	▲	▲	▲	▲	▲	▲	▲	▲	▲
	1,050	0.95	800	830	▲	▲	▲	▲	▲	▲	▲	▲	▲	▲	▲	▲	▲	▲	▲	▲	▲	▲
	1,250	1.15	910	940	▲	▲	▲	▲	▲	■	▲	▲	▲	▲	▲	▲	▲	▲	▲	▲	▲	▲
	1,250	1.25	1,010	1,030	▲	▲	■	▲	■	▲	▲	▲	▲	▲	▲	■	▲	▲	▲	▲	▲	▲
	1,400	1.35	970	990	▲	■	▲	▲	■	■	▲	▲	■	▲	▲	▲	▲	▲	▲	▲	▲	▲
	1,500	1.45	1,030	1,030	■	▲	■	■	▲	△	▲	■	▲	▲	■	■	▲	▲	■	▲	▲	■
	1,600	1.55	1,070	1,090	■	■	△	▲	■	△	▲	▲	■	■	▲	■	▲	■	▲	▲	■	▲
	1,500	1.65	1,160	1,160	▲	△	△	■	△	△	■	■	△	▲	■	△	▲	■	■	▲	▲	■
	1,600	1.75	1,220	1,230	■	△	△	■	△	—	▲	■	△	▲	△	△	■	▲	■	■	■	△

* Indicated loads are based on ISO 10567, at maximum reach, and may be swung 360° on firm and even ground
1) Standard bucket with teeth Z 40
2) HD bucket with teeth Z 40
3) Bucket for direct mounting
4) Bucket for mounting to quick coupler SWA 48 (250 kg)
Other buckets available upon request

Max. material weight ▲ = ≤ 2.0 t/m³, ■ = ≤ 1.8 t/m³, ▲ = ≤ 1.65 t/m³, ■ = ≤ 1.5 t/m³, △ = ≤ 1.2 t/m³, — = not authorised

Lift capacities

with mono boom 6.00 m, counterweight 4.6 t and track pads 600 mm

Stick 2.50 m

Under-carriage	m	3.0 m		4.5 m		6.0 m		7.5 m		9.0 m				m
XNLC	7.5					6.2	7.9*					6.1	7.7*	6.0
	6.0					6.1	8.6*					4.6	7.5*	7.1
	4.5	16.7	17.5*	8.9	11.7*	5.9	9.4*	4.2	6.9			3.9	6.5	7.8
	3.0			8.2	14.0*	5.5	9.5	4.0	6.7			3.6	6.0	8.1
	1.5			7.6	14.5	5.2	9.2	3.9	6.6			3.5	5.8	8.1
	0			7.4	14.3	5.1	9.0	3.8	6.5			3.5	6.0	7.9
	-1.5	12.9*	12.9*	7.5	14.3	5.0	8.9					3.9	6.7	7.3
	-3.0	14.5	15.7*	7.6	12.3*	5.1	9.0					4.7	8.2	6.4
	-4.5	10.5*	10.5*	8.0	8.2*							7.2	7.6*	4.8
NLC	7.5					6.6	7.9*					6.5	7.7*	6.0
	6.0					6.5	8.6*					4.9	7.5*	7.1
	4.5	17.5*	17.5*	9.6	11.7*	6.2	9.4*	4.4	6.9			4.2	6.5	7.8
	3.0			8.8	14.0*	5.9	9.5	4.3	6.8			3.8	6.0	8.1
	1.5			8.3	14.5	5.6	9.2	4.2	6.6			3.7	5.8	8.1
	0			8.1	14.3	5.4	9.0	4.1	6.5			3.8	6.0	7.9
	-1.5	12.9*	12.9*	8.1	14.3	5.4	8.9					4.2	6.7	7.3
	-3.0	15.7*	15.7*	8.2	12.3*	5.5	9.1					5.1	8.3	6.4
	-4.5	10.5*	10.5*	8.2*	8.2*							7.6*	7.6*	4.8
LC	7.5					7.1	7.9*					7.0	7.7*	6.0
	6.0					7.0	8.6*					5.3	7.5*	7.1
	4.5	17.5*	17.5*	10.5	11.7*	6.8	9.4*	4.8	6.9			4.5	6.5	7.8
	3.0			9.7	14.0*	6.4	9.5	4.7	6.8			4.2	6.0	8.1
	1.5			9.1	14.6	6.1	9.2	4.5	6.6			4.0	5.9	8.1
	0			8.9	14.3	6.0	9.0	4.4	6.5			4.1	6.1	7.9
	-1.5	12.9*	12.9*	8.9	14.3	5.9	9.0					4.5	6.7	7.3
	-3.0	15.7*	15.7*	9.1	12.3*	6.0	9.1					5.5	8.3	6.4
	-4.5	10.5*	10.5*	8.2*	8.2*							7.6*	7.6*	4.8

Stick 3.00 m

Under-carriage	m	3.0 m		4.5 m		6.0 m		7.5 m		9.0 m				m
XNLC	7.5					6.3	7.7*					5.3	6.3*	6.6
	6.0					6.2	8.0*	4.3	6.7*			4.1	6.1*	7.6
	4.5			9.1	10.7*	5.9	8.9*	4.2	6.9			3.6	5.9	8.3
	3.0			8.3	13.1*	5.6	9.5	4.0	6.7			3.3	5.5	8.6
	1.5			7.7	14.6	5.2	9.2	3.9	6.6			3.2	5.3	8.6
	0	6.5*	6.5*	7.4	14.2	5.0	8.9	3.7	6.4			3.2	5.5	8.4
	-1.5	12.0*	12.0*	7.3	14.1	4.9	8.8	3.7	6.4			3.5	6.0	7.9
	-3.0	14.2	17.5*	7.4	13.1*	5.0	8.9					4.1	7.1	7.0
	-4.5	12.9*	12.9*	7.7	9.9*							5.8	7.8*	5.6
NLC	7.5					6.7	7.7*					5.6	6.3*	6.6
	6.0					6.6	8.0*	4.6	6.7*			4.4	6.1*	7.6
	4.5			9.8	10.7*	6.3	8.9*	4.5	7.0			3.8	5.9	8.3
	3.0			9.0	13.1*	5.9	9.6	4.3	6.8			3.5	5.5	8.6
	1.5			8.3	14.6	5.6	9.2	4.1	6.6			3.4	5.4	8.6
	0	6.5*	6.5*	8.0	14.3	5.4	8.9	4.0	6.4			3.5	5.5	8.4
	-1.5	12.0*	12.0*	7.9	14.2	5.3	8.8	4.0	6.4			3.7	6.0	7.9
	-3.0	15.6	17.5*	8.0	13.1*	5.4	8.9					4.4	7.2	7.0
	-4.5	12.9*	12.9*	8.3	9.9*							6.2	7.8*	5.6
LC	7.5					7.2	7.7*					6.1	6.3*	6.6
	6.0					7.1	8.0*	4.9	6.7*			4.8	6.1*	7.6
	4.5			10.7	10.7*	6.8	8.9*	4.8	7.0			4.1	6.0	8.3
	3.0			9.8	13.1*	6.5	9.6	4.7	6.8			3.8	5.5	8.6
	1.5			9.2	14.7	6.1	9.2	4.5	6.6			3.7	5.4	8.6
	0	6.5*	6.5*	8.9	14.3	5.9	9.0	4.4	6.5			3.8	5.5	8.4
	-1.5	12.0*	12.0*	8.8	14.2	5.8	8.9	4.3	6.4			4.1	6.0	7.9
	-3.0	17.5*	17.5*	8.9	13.1*	5.9	8.9					4.8	7.2	7.0
	-4.5	12.9*	12.9*	9.2	9.9*							6.8	7.8*	5.6

Stick 3.50 m

Under-carriage	m	3.0 m		4.5 m		6.0 m		7.5 m		9.0 m				m
XNLC	7.5											4.7	5.2*	7.2
	6.0							4.3	6.6*			3.8	5.1*	8.1
	4.5					6.0	8.2*	4.2	7.0			3.3	5.2*	8.7
	3.0	12.9*	12.9*	8.5	12.2*	5.6	9.4*	4.0	6.8			3.0	5.1	9.0
	1.5	5.5*	5.5*	7.8	14.3*	5.2	9.2	3.8	6.5	2.9	5.0	2.9	4.9	9.0
	0	7.6*	7.6*	7.4	14.2	5.0	8.9	3.7	6.4			2.9	5.1	8.8
	-1.5	11.5*	11.5*	7.2	14.0	4.8	8.7	3.6	6.3			3.2	5.4	8.3
	-3.0	13.9	17.0*	7.3	13.8*	4.9	8.7					3.6	6.3	7.5
	-4.5	14.3	14.9*	7.5	11.1*	5.0	8.2*					4.8	7.8*	6.2
NLC	7.5											5.0	5.2*	7.2
	6.0							4.6	6.6*			4.0	5.1*	8.1
	4.5					6.4	8.2*	4.5	7.0			3.5	5.2*	8.7
	3.0	12.9*	12.9*	9.1	12.2*	6.0	9.4*	4.3	6.8			3.2	5.1	9.0
	1.5	5.5*	5.5*	8.4	14.3*	5.6	9.2	4.1	6.6	3.1	5.0	3.1	5.0	9.0
	0	7.6*	7.6*	8.0	14.2	5.3	8.9	3.9	6.4			3.2	5.1	8.8
	-1.5	11.5*	11.5*	7.8	14.0	5.2	8.8	3.9	6.3			3.4	5.5	8.3
	-3.0	15.3	17.0*	7.9	13.8*	5.2	8.8					3.9	6.4	7.5
	-4.5	14.9*	14.9*	8.1	11.1*	5.4	8.2*					5.2	7.8*	6.2
LC	7.5											5.2*	5.2*	7.2
	6.0							5.0	6.6*			4.4	5.1*	8.1
	4.5					6.9	8.2*	4.9	7.0			3.8	5.2*	8.7
	3.0	12.9*	12.9*	10.0	12.2*	6.5	9.4*	4.7	6.8			3.5	5.1	9.0
	1.5	5.5*	5.5*	9.3	14.3*	6.1	9.2	4.5	6.6	3.4	5.0	3.4	5.0	9.0
	0	7.6*	7.6*	8.8	14.3	5.9	8.9	4.3	6.4			3.5	5.1	8.8
	-1.5	11.5*	11.5*	8.7	14.1	5.7	8.8	4.2	6.3			3.7	5.5	8.3
	-3.0	17.0*	17.0*	8.7	13.8*	5.7	8.8					4.3	6.4	7.5
	-4.5	14.9*	14.9*	8.9	11.1*	5.9	8.2*					5.7	7.8*	6.2

Height **Can be slewed through 360°** **In longitudinal position of undercarriage** **Max. reach** *** Limited by hydr. capacity**

The load values are quoted in tons (t) at stick end (without bucket), and may be swung 360° on firm and even ground. Adjacent values are valid for the undercarriage when in the longitudinal position. Capacities are valid for 600 mm wide track pads. Indicated loads are based on ISO 10567 standard and do not exceed 75 % of tipping or 87 % of hydraulic capacity (indicated via *). Without bucket cylinder, link and lever the lift capacities will increase by 345 kg. Lifting capacity of the excavator is limited by machine stability and hydraulic capacity.
According to European Standard, EN 474-5: In the European Union excavators have to be equipped with an overload warning device, a load diagram and automatic safety check valves on hoist cylinders and stick cylinder(s), when they are used for lifting operations which require the use of lifting accessories.
Determine maximum load lift from load lift chart displayed in the operator's cab or from load lift chart detailed in the operator's manual supplied with the machine.

Lift capacities

with mono boom 6.00 m, counterweight 5.1 t and track pads 600 mm

Stick 2.50 m

Under-carriage	m	3.0 m		4.5 m		6.0 m		7.5 m		9.0 m				m
XNLC	7.5					6.5	7.9*					6.4	7.7*	6.0
	6.0					6.4	8.6*					4.9	7.5*	7.1
	4.5	17.5*	17.5*	9.4	11.7*	6.2	9.4*	4.4	7.2			4.2	6.8	7.8
	3.0			8.6	14.0*	5.8	9.9	4.3	7.1			3.8	6.3	8.1
	1.5			8.1	15.2	5.5	9.6	4.1	6.9			3.7	6.1	8.1
	0			7.9	14.9	5.4	9.4	4.0	6.8			3.8	6.3	7.9
	-1.5	12.9*	12.9*	7.9	14.4*	5.3	9.3					4.1	7.0	7.3
	-3.0	15.4	15.7*	8.1	12.3*	5.4	9.3*					5.0	8.5*	6.4
	-4.5	10.5*	10.5*	8.2*	8.2*							7.6*	7.6*	4.8
NLC	7.5					6.9	7.9*					6.8	7.7*	6.0
	6.0					6.8	8.6*					5.2	7.5*	7.1
	4.5	17.5*	17.5*	10.1	11.7*	6.6	9.4*	4.7	7.2			4.4	6.8	7.8
	3.0			9.3	14.0*	6.2	9.9	4.5	7.1			4.0	6.3	8.1
	1.5			8.7	15.2	5.9	9.6	4.4	6.9			3.9	6.1	8.1
	0			8.5	15.0	5.8	9.4	4.3	6.8			4.0	6.3	7.9
	-1.5	12.9*	12.9*	8.5	14.4*	5.7	9.4					4.4	7.0	7.3
	-3.0	15.7*	15.7*	8.7	12.3*	5.8	9.3*					5.4	8.5*	6.4
	-4.5	10.5*	10.5*	8.2*	8.2*							7.6*	7.6*	4.8
LC	7.5					7.5	7.9*					7.4	7.7*	6.0
	6.0					7.4	8.6*					5.6	7.5*	7.1
	4.5	17.5*	17.5*	11.0	11.7*	7.1	9.4*	5.1	7.3			4.8	6.8	7.8
	3.0			10.2	14.0*	6.8	10.0	4.9	7.1			4.4	6.3	8.1
	1.5			9.6	15.3	6.5	9.6	4.8	6.9			4.3	6.1	8.1
	0			9.4	15.0	6.3	9.4	4.7	6.8			4.4	6.4	7.9
	-1.5	12.9*	12.9*	9.4	14.4*	6.3	9.4					4.8	7.0	7.3
	-3.0	15.7*	15.7*	9.6	12.3*	6.4	9.3*					5.9	8.5*	6.4
	-4.5	10.5*	10.5*	8.2*	8.2*							7.6*	7.6*	4.8

Stick 3.00 m

Under-carriage	m	3.0 m		4.5 m		6.0 m		7.5 m		9.0 m				m
XNLC	7.5					6.6	7.7*					5.6	6.3*	6.6
	6.0					6.5	8.0*	4.5	6.7*			4.4	6.1*	7.6
	4.5			9.6	10.7*	6.2	8.9*	4.4	7.3			3.8	6.2*	8.3
	3.0			8.8	13.1*	5.9	10.0*	4.3	7.1			3.5	5.7	8.6
	1.5			8.2	14.9*	5.5	9.6	4.1	6.9			3.4	5.6	8.6
	0	6.5*	6.5*	7.9	14.9	5.3	9.4	4.0	6.7			3.4	5.8	8.4
	-1.5	12.0*	12.0*	7.8	14.8*	5.2	9.3	3.9	6.7			3.7	6.3	7.9
	-3.0	15.0	17.5*	7.9	13.1*	5.3	9.3					4.4	7.5	7.0
	-4.5	12.9*	12.9*	8.2	9.9*							6.1	7.8*	5.6
NLC	7.5					7.0	7.7*					5.9	6.3*	6.6
	6.0					6.9	8.0*	4.8	6.7*			4.7	6.1*	7.6
	4.5			10.3	10.7*	6.6	8.9*	4.7	7.3			4.0	6.2*	8.3
	3.0			9.4	13.1*	6.3	10.0*	4.5	7.1			3.7	5.8	8.6
	1.5			8.8	14.9*	5.9	9.6	4.4	6.9			3.6	5.6	8.6
	0	6.5*	6.5*	8.5	14.9	5.7	9.4	4.2	6.8			3.7	5.8	8.4
	-1.5	12.0*	12.0*	8.4	14.8*	5.6	9.3	4.2	6.7			4.0	6.3	7.9
	-3.0	16.5	17.5*	8.5	13.1*	5.7	9.3					4.7	7.5	7.0
	-4.5	12.9*	12.9*	8.8	9.9*							6.5	7.8*	5.6
LC	7.5					7.6	7.7*					6.3*	6.3*	6.6
	6.0					7.5	8.0*	5.2	6.7*			5.0	6.1*	7.6
	4.5			10.7*	10.7*	7.2	8.9*	5.1	7.3			4.4	6.2*	8.3
	3.0			10.3	13.1*	6.8	10.0*	4.9	7.1			4.0	5.8	8.6
	1.5			9.7	14.9*	6.5	9.7	4.7	6.9			3.9	5.6	8.6
	0	6.5*	6.5*	9.4	15.0	6.3	9.4	4.6	6.8			4.0	5.8	8.4
	-1.5	12.0*	12.0*	9.3	14.8*	6.2	9.3	4.6	6.7			4.3	6.3	7.9
	-3.0	17.5*	17.5*	9.4	13.1*	6.2	9.4					5.1	7.5	7.0
	-4.5	12.9*	12.9*	9.7	9.9*							7.1	7.8*	5.6

Stick 3.50 m

Under-carriage	m	3.0 m		4.5 m		6.0 m		7.5 m		9.0 m				m
XNLC	7.5											5.0	5.2*	7.2
	6.0							4.6	6.6*			4.0	5.1*	8.1
	4.5					6.3	8.2*	4.4	7.3			3.5	5.2*	8.7
	3.0	12.9*	12.9*	9.0	12.2*	5.9	9.4*	4.3	7.1			3.2	5.3	9.0
	1.5	5.5*	5.5*	8.2	14.3*	5.5	9.6	4.1	6.9	3.1	5.2	3.1	5.2	9.0
	0	7.6*	7.6*	7.8	14.9	5.3	9.3	3.9	6.7			3.1	5.3	8.8
	-1.5	11.5*	11.5*	7.7	14.7	5.2	9.2	3.8	6.6			3.4	5.7	8.3
	-3.0	14.7	17.0*	7.7	13.8*	5.2	9.2					3.9	6.7	7.5
	-4.5	14.9*	14.9*	7.9	11.1*	5.3	8.2*					5.1	7.8*	6.2
NLC	7.5											5.2*	5.2*	7.2
	6.0							4.9	6.6*			4.2	5.1*	8.1
	4.5					6.7	8.2*	4.7	7.3			3.7	5.2*	8.7
	3.0	12.9*	12.9*	9.6	12.2*	6.3	9.4*	4.5	7.1			3.4	5.3	9.0
	1.5	5.5*	5.5*	8.9	14.3*	5.9	9.6	4.3	6.9	3.3	5.2	3.3	5.2	9.0
	0	7.6*	7.6*	8.4	14.9	5.7	9.3	4.2	6.7			3.4	5.3	8.8
	-1.5	11.5*	11.5*	8.3	14.7	5.5	9.2	4.1	6.6			3.6	5.7	8.3
	-3.0	16.2	17.0*	8.3	13.8*	5.6	9.2					4.2	6.7	7.5
	-4.5	14.9*	14.9*	8.6	11.1*	5.7	8.2*					5.5	7.8*	6.2
LC	7.5											5.2*	5.2*	7.2
	6.0							5.3	6.6*			4.6	5.1*	8.1
	4.5					7.3	8.2*	5.1	7.3			4.0	5.2*	8.7
	3.0	12.9*	12.9*	10.5	12.2*	6.9	9.4*	4.9	7.1			3.7	5.4	9.0
	1.5	5.5*	5.5*	9.8	14.3*	6.5	9.7	4.7	6.9	3.6	5.2	3.6	5.2	9.0
	0	7.6*	7.6*	9.3	15.0	6.2	9.4	4.6	6.7			3.7	5.3	8.8
	-1.5	11.5*	11.5*	9.2	14.8	6.1	9.2	4.5	6.6			3.9	5.8	8.3
	-3.0	17.0*	17.0*	9.2	13.8*	6.1	9.2					4.5	6.7	7.5
	-4.5	14.9*	14.9*	9.4	11.1*	6.3	8.2*					6.0	7.8*	6.2

Height **Can be slewed through 360°** **In longitudinal position of undercarriage** **Max. reach** *** Limited by hydr. capacity**

The load values are quoted in tons (t) at stick end (without bucket), and may be swung 360° on firm and even ground. Adjacent values are valid for the undercarriage when in the longitudinal position. Capacities are valid for 600 mm wide track pads. Indicated loads are based on ISO 10567 standard and do not exceed 75 % of tipping or 87 % of hydraulic capacity (indicated via *). Without bucket cylinder, link and lever the lift capacities will increase by 345 kg. Lifting capacity of the excavator is limited by machine stability and hydraulic capacity.
According to European Standard, EN 474-5: In the European Union excavators have to be equipped with an overload warning device, a load diagram and automatic safety check valves on hoist cylinders and stick cylinder(s), when they are used for lifting operations which require the use of lifting accessories.
Determine maximum load lift from load lift chart displayed in the operator's cab or from load lift chart detailed in the operator's manual supplied with the machine.

Lift capacities

with mono boom straight 6.20 m, counterweight 4.6 t and track pads 600 mm

Stick 2.50 m

Under-carriage	m	3.0 m		4.5 m		6.0 m		7.5 m		9.0 m				m
XNLC	9.0			9.7	9.8*							8.7	8.9*	4.8
	7.5			9.7	10.1*	6.1	9.5*					5.4	7.9*	6.5
	6.0			9.4	11.3*	6.0	9.7*	4.2	6.9			4.2	6.9	7.5
	4.5			8.7	13.2*	5.7	9.7	4.1	6.8			3.6	6.0	8.1
	3.0			7.9	14.9	5.4	9.3	3.9	6.7			3.3	5.6	8.4
	1.5			7.5	13.7*	5.1	9.0	3.8	6.5			3.2	5.5	8.5
	0			7.3	14.1	5.0	8.9	3.7	6.4			3.3	5.6	8.2
	-1.5	9.9*	9.9*	7.4	12.7*	5.0	8.8	3.7	6.4			3.6	6.2	7.7
	-3.0	10.7*	10.7*	7.6	9.9*	5.1	7.8*					4.4	6.3*	6.8
	-4.5													
NLC	9.0			9.8*	9.8*							8.9*	8.9*	4.8
	7.5			10.1*	10.1*	6.5	9.5*					5.7	7.9*	6.5
	6.0			10.0	11.3*	6.4	9.7*	4.5	6.9			4.5	6.9	7.5
	4.5			9.3	13.2*	6.1	9.8	4.4	6.8			3.8	6.0	8.1
	3.0			8.6	14.9	5.8	9.4	4.2	6.7			3.5	5.6	8.4
	1.5			8.1	13.7*	5.5	9.1	4.1	6.5			3.5	5.5	8.5
	0			7.9	14.2	5.4	8.9	4.0	6.4			3.6	5.6	8.2
	-1.5	9.9*	9.9*	8.0	12.7*	5.3	8.9	4.0	6.4			3.9	6.2	7.7
	-3.0	10.7*	10.7*	8.2	9.9*	5.5	7.8*					4.7	6.3*	6.8
	-4.5													
LC	9.0			9.8*	9.8*							8.9*	8.9*	4.8
	7.5			10.1*	10.1*	7.0	9.5*					6.2	7.9*	6.5
	6.0			10.9	11.3*	6.9	9.7*	4.8	7.0			4.8	7.0	7.5
	4.5			10.2	13.2*	6.6	9.8	4.7	6.9			4.2	6.0	8.1
	3.0			9.4	15.0	6.3	9.4	4.6	6.7			3.9	5.6	8.4
	1.5			8.9	13.7*	6.0	9.1	4.4	6.5			3.8	5.5	8.5
	0			8.8	14.2	5.9	8.9	4.4	6.4			3.9	5.7	8.2
	-1.5	9.9*	9.9*	8.8	12.7*	5.8	8.9	4.4	6.5			4.2	6.2	7.7
	-3.0	10.7*	10.7*	9.0	9.9*	6.0	7.8*					5.1	6.3*	6.8
	-4.5													

Stick 3.00 m

Under-carriage	m	3.0 m		4.5 m		6.0 m		7.5 m		9.0 m				m
XNLC	9.0											6.9	7.1*	5.6
	7.5					6.2	8.3*					4.7	6.4*	7.1
	6.0			8.6*	8.6*	6.1	9.0*	4.2	7.0			3.7	6.1*	8.0
	4.5	16.9	18.2*	8.9	12.4*	5.8	9.8	4.1	6.8			3.3	5.5	8.6
	3.0			8.1	14.4*	5.4	9.4	3.9	6.7			3.0	5.1	8.9
	1.5			7.5	14.4	5.1	9.0	3.8	6.5			2.9	5.0	9.0
	0			7.3	14.0	4.9	8.8	3.7	6.3			3.0	5.1	8.7
	-1.5	9.4*	9.4*	7.2	13.5*	4.9	8.7	3.6	6.3			3.3	5.6	8.2
	-3.0	13.1*	13.1*	7.4	11.0*	4.9	8.7*					3.8	6.2*	7.4
	-4.5			7.1*	7.1*	5.0*	5.0*					4.8*	4.8*	6.1
NLC	9.0											7.1*	7.1*	5.6
	7.5					6.6	8.3*					5.0	6.4*	7.1
	6.0			8.6*	8.6*	6.5	9.0*	4.5	7.0			4.0	6.1*	8.0
	4.5	18.2*	18.2*	9.5	12.4*	6.2	9.8	4.4	6.9			3.5	5.5	8.6
	3.0			8.7	14.4*	5.8	9.4	4.2	6.7			3.2	5.1	8.9
	1.5			8.1	14.4	5.5	9.1	4.0	6.5			3.2	5.0	9.0
	0			7.9	14.1	5.3	8.8	3.9	6.4			3.2	5.2	8.7
	-1.5	9.4*	9.4*	7.9	13.5*	5.2	8.8	3.9	6.3			3.5	5.6	8.2
	-3.0	13.1*	13.1*	8.0	11.0*	5.3	8.7*					4.1	6.2*	7.4
	-4.5			7.1*	7.1*	5.0*	5.0*					4.8*	4.8*	6.1
LC	9.0											7.1*	7.1*	5.6
	7.5					7.2	8.3*					5.4	6.4*	7.1
	6.0			8.6*	8.6*	7.0	9.0*	4.9	7.0			4.3	6.1*	8.0
	4.5	18.2*	18.2*	10.4	12.4*	6.7	9.9	4.8	6.9			3.8	5.5	8.6
	3.0			9.6	14.4*	6.3	9.4	4.6	6.7			3.5	5.1	8.9
	1.5			9.0	14.4	6.0	9.1	4.4	6.5			3.4	5.0	9.0
	0			8.7	14.1	5.8	8.9	4.3	6.4			3.5	5.2	8.7
	-1.5	9.4*	9.4*	8.7	13.5*	5.8	8.8	4.3	6.4			3.8	5.6	8.2
	-3.0	13.1*	13.1*	8.8	11.0*	5.8	8.7*					4.5	6.2*	7.4
	-4.5			7.1*	7.1*	5.0*	5.0*					4.8*	4.8*	6.1

Stick 3.50 m

Under-carriage	m	3.0 m		4.5 m		6.0 m		7.5 m		9.0 m				m
XNLC	9.0					6.2	6.4*					5.8	5.8*	6.3
	7.5					6.3	7.0*	4.3	5.7*			4.2	5.3*	7.6
	6.0					6.2	7.5*	4.3	7.0			3.4	5.1*	8.5
	4.5	12.2*	12.2*	9.1	10.0*	5.8	9.2*	4.1	6.9	3.0	5.1	3.0	5.0	9.1
	3.0			8.2	13.7*	5.5	9.5	3.9	6.7	3.0	5.0	2.8	4.7	9.4
	1.5			7.6	14.4	5.1	9.0	3.7	6.4	2.9	4.9	2.7	4.6	9.4
	0	5.3*	5.3*	7.2	14.0	4.9	8.8	3.6	6.3	2.8	4.8	2.7	4.7	9.2
	-1.5	9.2*	9.2*	7.1	13.9	4.8	8.6	3.5	6.2			2.9	5.1	8.7
	-3.0	13.8	14.5*	7.2	12.0*	4.8	8.7	3.6	6.3			3.4	5.8	7.9
	-4.5	10.2*	10.2*	7.4	8.6*	5.0	6.5*					4.3	5.2*	6.7
NLC	9.0					6.4*	6.4*					5.8*	5.8*	6.3
	7.5					6.7	7.0*	4.6	5.7*			4.4	5.3*	7.6
	6.0					6.5	7.5*	4.5	7.1			3.6	5.1*	8.5
	4.5	12.2*	12.2*	9.7	10.0*	6.2	9.2*	4.4	6.9	3.2	5.1	3.2	5.0	9.1
	3.0			8.9	13.7*	5.8	9.5	4.2	6.7	3.2	5.0	3.0	4.7	9.4
	1.5			8.2	14.5	5.5	9.1	4.0	6.5	3.1	4.9	2.9	4.6	9.4
	0	5.3*	5.3*	7.8	14.0	5.2	8.8	3.9	6.3	3.0	4.9	2.9	4.7	9.2
	-1.5	9.2*	9.2*	7.7	13.9	5.1	8.7	3.8	6.2			3.1	5.1	8.7
	-3.0	14.5*	14.5*	7.8	12.0*	5.2	8.7	3.9	6.3			3.6	5.8	7.9
	-4.5	10.2*	10.2*	8.0	8.6*	5.3	6.5*					4.6	5.2*	6.7
LC	9.0					6.4*	6.4*					5.8*	5.8*	6.3
	7.5					7.0*	7.0*	5.0	5.7*			4.8	5.3*	7.6
	6.0					7.1	7.5*	4.9	7.1			3.9	5.1*	8.5
	4.5	12.2*	12.2*	10.0*	10.0*	6.8	9.2*	4.8	6.9	3.5	5.1	3.5	5.1	9.1
	3.0			9.8	13.7*	6.4	9.5	4.6	6.7	3.5	5.0	3.2	4.7	9.4
	1.5			9.0	14.5	6.0	9.1	4.4	6.5	3.4	4.9	3.2	4.6	9.4
	0	5.3*	5.3*	8.7	14.1	5.8	8.8	4.2	6.3	3.3	4.9	3.2	4.7	9.2
	-1.5	9.2*	9.2*	8.6	14.0	5.7	8.7	4.2	6.3			3.4	5.1	8.7
	-3.0	14.5*	14.5*	8.6	12.0*	5.7	8.7	4.2	6.3			4.0	5.9	7.9
	-4.5	10.2*	10.2*	8.6*	8.6*	5.9	6.5*					5.1	5.2*	6.7

Height **Can be slewed through 360°** **In longitudinal position of undercarriage** **Max. reach** *** Limited by hydr. capacity**

The load values are quoted in tons (t) at stick end (without bucket), and may be swung 360° on firm and even ground. Adjacent values are valid for the undercarriage when in the longitudinal position. Capacities are valid for 600 mm wide track pads. Indicated loads are based on ISO 10567 standard and do not exceed 75 % of tipping or 87 % of hydraulic capacity (indicated via *). Without bucket cylinder, link and lever the lift capacities will increase by 345 kg. Lifting capacity of the excavator is limited by machine stability and hydraulic capacity.
According to European Standard, EN 474-5: In the European Union excavators have to be equipped with an overload warning device, a load diagram and automatic safety check valves on hoist cylinders and stick cylinder(s), when they are used for lifting operations which require the use of lifting accessories.
Determine maximum load lift from load lift chart displayed in the operator's cab or from load lift chart detailed in the operator's manual supplied with the machine.

Lift capacities

with mono boom straight 6.20 m, counterweight 5.1 t and track pads 600 mm

Stick 2.50 m

Under-carriage	m	3.0 m		4.5 m		6.0 m		7.5 m		9.0 m				m
XNLC	9.0			9.8*	9.8*							8.9*	8.9*	4.8
	7.5			10.1*	10.1*	6.4	9.5*					5.6	7.9*	6.5
	6.0			9.8	11.3*	6.3	9.7*	4.4	7.2			4.4	7.2	7.5
	4.5			9.2	13.2*	6.0	10.2	4.3	7.1			3.8	6.3	8.1
	3.0			8.4	15.0*	5.7	9.8	4.2	7.0			3.5	5.8	8.4
	1.5			7.9	13.7*	5.4	9.5	4.1	6.8			3.4	5.7	8.5
	0			7.8	14.6*	5.3	9.3	4.0	6.7			3.5	5.9	8.2
	-1.5	9.9*	9.9*	7.8	12.7*	5.3	9.3	4.0	6.7			3.9	6.5	7.7
	-3.0	10.7*	10.7*	8.0	9.9*	5.4	7.8*					4.6	6.3*	6.8
	-4.5													
NLC	9.0			9.8*	9.8*							8.9*	8.9*	4.8
	7.5			10.1*	10.1*	6.8	9.5*					6.0	7.9*	6.5
	6.0			10.5	11.3*	6.7	9.7*	4.7	7.3			4.7	7.3	7.5
	4.5			9.8	13.2*	6.4	10.2	4.6	7.2			4.1	6.3	8.1
	3.0			9.0	15.0*	6.1	9.8	4.5	7.0			3.8	5.9	8.4
	1.5			8.6	13.7*	5.8	9.5	4.3	6.8			3.7	5.7	8.5
	0			8.4	14.6*	5.7	9.3	4.2	6.7			3.8	5.9	8.2
	-1.5	9.9*	9.9*	8.5	12.7*	5.7	9.3	4.3	6.8			4.1	6.5	7.7
	-3.0	10.7*	10.7*	8.6	9.9*	5.8	7.8*					4.9	6.3*	6.8
	-4.5													
LC	9.0			9.8*	9.8*							8.9*	8.9*	4.8
	7.5			10.1*	10.1*	7.4	9.5*					6.5	7.9*	6.5
	6.0			11.3*	11.3*	7.3	9.7*	5.1	7.3			5.1	7.3	7.5
	4.5			10.7	13.2*	7.0	10.2	5.0	7.2			4.4	6.3	8.1
	3.0			9.9	15.0*	6.6	9.8	4.8	7.0			4.1	5.9	8.4
	1.5			9.4	13.7*	6.4	9.5	4.7	6.9			4.0	5.8	8.5
	0			9.3	14.6*	6.2	9.3	4.6	6.8			4.1	5.9	8.2
	-1.5	9.9*	9.9*	9.3	12.7*	6.2	9.3	4.6	6.8			4.5	6.5	7.7
	-3.0	10.7*	10.7*	9.5	9.9*	6.3	7.8*					5.4	6.3*	6.8
	-4.5													

Stick 3.00 m

Under-carriage	m	3.0 m		4.5 m		6.0 m		7.5 m		9.0 m				m
XNLC	9.0											7.1*	7.1*	5.6
	7.5					6.5	8.3*					4.9	6.4*	7.1
	6.0			8.6*	8.6*	6.4	9.0*	4.5	7.3			4.0	6.1*	8.0
	4.5	17.8	18.2*	9.3	12.4*	6.1	9.9*	4.4	7.2			3.5	5.7	8.6
	3.0			8.5	14.4*	5.7	9.8	4.2	7.0			3.2	5.4	8.9
	1.5			8.0	15.0	5.4	9.5	4.0	6.8			3.1	5.3	9.0
	0			7.7	14.7	5.2	9.2	3.9	6.7			3.2	5.4	8.7
	-1.5	9.4*	9.4*	7.7	13.5*	5.2	9.2	3.9	6.6			3.5	5.9	8.2
	-3.0	13.1*	13.1*	7.8	11.0*	5.2	8.7*					4.0	6.2*	7.4
	-4.5			7.1*	7.1*	5.0*	5.0*					4.8*	4.8*	6.1
NLC	9.0											7.1*	7.1*	5.6
	7.5					6.9	8.3*					5.2	6.4*	7.1
	6.0			8.6*	8.6*	6.8	9.0*	4.8	7.3			4.2	6.1*	8.0
	4.5	18.2*	18.2*	10.0	12.4*	6.5	9.9*	4.6	7.2			3.7	5.7	8.6
	3.0			9.2	14.4*	6.1	9.9	4.5	7.0			3.4	5.4	8.9
	1.5			8.6	15.1	5.8	9.5	4.3	6.8			3.4	5.3	9.0
	0			8.3	14.8	5.6	9.3	4.2	6.7			3.4	5.4	8.7
	-1.5	9.4*	9.4*	8.3	13.5*	5.6	9.2	4.2	6.7			3.7	5.9	8.2
	-3.0	13.1*	13.1*	8.5	11.0*	5.6	8.7*					4.3	6.2*	7.4
	-4.5			7.1*	7.1*	5.0*	5.0*					4.8*	4.8*	6.1
LC	9.0											7.1*	7.1*	5.6
	7.5					7.5	8.3*					5.7	6.4*	7.1
	6.0			8.6*	8.6*	7.3	9.0*	5.1	7.3			4.6	6.1*	8.0
	4.5	18.2*	18.2*	10.9	12.4*	7.0	9.9*	5.0	7.2			4.0	5.8	8.6
	3.0			10.1	14.4*	6.7	9.9	4.8	7.0			3.7	5.4	8.9
	1.5			9.5	15.1	6.3	9.5	4.7	6.8			3.6	5.3	9.0
	0			9.2	14.8	6.2	9.3	4.6	6.7			3.7	5.4	8.7
	-1.5	9.4*	9.4*	9.2	13.5*	6.1	9.2	4.5	6.7			4.0	5.9	8.2
	-3.0	13.1*	13.1*	9.3	11.0*	6.2	8.7*					4.7	6.2*	7.4
	-4.5			7.1*	7.1*	5.0*	5.0*					4.8*	4.8*	6.1

Stick 3.50 m

Under-carriage	m	3.0 m		4.5 m		6.0 m		7.5 m		9.0 m				m
XNLC	9.0					6.4*	6.4*					5.8*	5.8*	6.3
	7.5					6.6	7.0*	4.5	5.7*			4.4	5.3*	7.6
	6.0					6.5	7.5*	4.5	7.1*			3.6	5.1*	8.5
	4.5	12.2*	12.2*	9.5	10.0*	6.2	9.2*	4.4	7.2	3.2	5.3	3.2	5.1*	9.1
	3.0			8.7	13.7*	5.8	9.9	4.2	7.0	3.2	5.3	3.0	4.9	9.4
	1.5			8.0	15.1*	5.4	9.5	4.0	6.8	3.1	5.2	2.9	4.8	9.4
	0	5.3*	5.3*	7.7	14.7	5.2	9.2	3.8	6.6	3.0	5.1	2.9	5.0	9.2
	-1.5	9.2*	9.2*	7.6	14.1*	5.1	9.1	3.8	6.5			3.1	5.3	8.7
	-3.0	14.5*	14.5*	7.6	12.0*	5.1	9.1	3.8	6.6			3.6	6.1	7.9
	-4.5	10.2*	10.2*	7.9	8.6*	5.3	6.5*					4.6	5.2*	6.7
NLC	9.0					6.4*	6.4*					5.8*	5.8*	6.3
	7.5					7.0	7.0*	4.8	5.7*			4.7	5.3*	7.6
	6.0					6.9	7.5*	4.8	7.1*			3.8	5.1*	8.5
	4.5	12.2*	12.2*	10.0*	10.0*	6.6	9.2*	4.6	7.2	3.4	5.4	3.4	5.1*	9.1
	3.0			9.4	13.7*	6.2	9.9	4.5	7.0	3.4	5.3	3.2	5.0	9.4
	1.5			8.6	15.1*	5.8	9.5	4.3	6.8	3.3	5.2	3.1	4.9	9.4
	0	5.3*	5.3*	8.3	14.7	5.6	9.2	4.1	6.6	3.2	5.1	3.1	5.0	9.2
	-1.5	9.2*	9.2*	8.2	14.1*	5.5	9.1	4.1	6.6			3.4	5.3	8.7
	-3.0	14.5*	14.5*	8.3	12.0*	5.5	9.1	4.1	6.6			3.8	6.1	7.9
	-4.5	10.2*	10.2*	8.5	8.6*	5.7	6.5*					4.9	5.2*	6.7
LC	9.0					6.4*	6.4*					5.8*	5.8*	6.3
	7.5					7.0*	7.0*	5.2	5.7*			5.0	5.3*	7.6
	6.0					7.4	7.5*	5.2	7.1*			4.2	5.1*	8.5
	4.5	12.2*	12.2*	10.0*	10.0*	7.1	9.2*	5.0	7.2	3.7	5.4	3.7	5.1*	9.1
	3.0			10.3	13.7*	6.7	9.9	4.8	7.0	3.7	5.3	3.4	5.0	9.4
	1.5			9.5	15.1*	6.3	9.5	4.6	6.8	3.6	5.2	3.4	4.9	9.4
	0	5.3*	5.3*	9.2	14.8	6.1	9.2	4.5	6.6	3.5	5.1	3.4	5.0	9.2
	-1.5	9.2*	9.2*	9.1	14.1*	6.0	9.1	4.4	6.6			3.7	5.4	8.7
	-3.0	14.5*	14.5*	9.1	12.0*	6.0	9.2	4.5	6.6			4.2	6.2	7.9
	-4.5	10.2*	10.2*	8.6*	8.6*	6.2	6.5*					5.2*	5.2*	6.7

Height **Can be slewed through 360°** **In longitudinal position of undercarriage** **Max. reach** *** Limited by hydr. capacity**

The load values are quoted in tons (t) at stick end (without bucket), and may be swung 360° on firm and even ground. Adjacent values are valid for the undercarriage when in the longitudinal position. Capacities are valid for 600 mm wide track pads. Indicated loads are based on ISO 10567 standard and do not exceed 75 % of tipping or 87 % of hydraulic capacity (indicated via *). Without bucket cylinder, link and lever the lift capacities will increase by 345 kg. Lifting capacity of the excavator is limited by machine stability and hydraulic capacity.
According to European Standard, EN 474-5: In the European Union excavators have to be equipped with an overload warning device, a load diagram and automatic safety check valves on hoist cylinders and stick cylinder(s), when they are used for lifting operations which require the use of lifting accessories.
Determine maximum load lift from load lift chart displayed in the operator's cab or from load lift chart detailed in the operator's manual supplied with the machine.

Lift capacities

with two-piece boom 6.20 m, counterweight 4.6 t and track pads 600 mm

Stick 2.50 m

Under-carriage	m	3.0 m		4.5 m		6.0 m		7.5 m		9.0 m				m
XNLC	9.0			9.7*	9.7*							8.9	9.0*	4.7
	7.5			10.1	10.2*	6.2	9.4*					5.4	7.9*	6.4
	6.0	11.0*	11.0*	9.9	11.8*	6.4	10.2					4.2	7.0	7.5
	4.5	17.6	20.5*	9.7	14.2*	6.3	10.1	4.2	7.0			3.6	6.1	8.1
	3.0	16.7	20.0*	9.1	15.1	5.9	9.9	4.1	6.9			3.3	5.6	8.4
	1.5	14.7	15.0*	8.3	15.0	5.6	9.7	3.9	6.7			3.2	5.5	8.4
	0	14.2	18.8*	7.8	14.9	5.3	9.3	3.7	6.5			3.3	5.7	8.2
	-1.5	14.1	22.5*	7.6	14.6	5.1	9.1	3.7	6.4			3.6	5.9*	7.7
	-3.0	14.3	19.7*	7.6	13.5*	5.0	8.2*					4.3	4.3*	6.8
	-4.5	11.1*	11.1*									6.6*	6.6*	4.2
NLC	9.0			9.7*	9.7*							9.0*	9.0*	4.7
	7.5			10.2*	10.2*	6.6	9.4*					5.8	7.9*	6.4
	6.0	11.0*	11.0*	10.6	11.8*	6.8	10.3					4.5	7.0	7.5
	4.5	18.8	20.5*	10.3	14.2*	6.7	10.1	4.5	7.0			3.8	6.1	8.1
	3.0	18.3	20.0*	9.8	15.1	6.3	10.0	4.3	6.9			3.5	5.6	8.4
	1.5	15.0*	15.0*	8.9	15.0	6.0	9.7	4.2	6.7			3.4	5.5	8.4
	0	15.7	18.8*	8.4	14.9	5.7	9.3	4.0	6.5			3.5	5.7	8.2
	-1.5	15.6	22.5*	8.2	14.6	5.4	9.1	3.9	6.4			3.8	5.9*	7.7
	-3.0	15.8	19.7*	8.2	13.5*	5.4	8.2*					4.3*	4.3*	6.8
	-4.5	11.1*	11.1*									6.6*	6.6*	4.2
LC	9.0			9.7*	9.7*							9.0*	9.0*	4.7
	7.5			10.2*	10.2*	7.2	9.4*					6.3	7.9*	6.4
	6.0	11.0*	11.0*	11.4	11.8*	7.4	10.3					4.9	7.1	7.5
	4.5	20.4	20.5*	11.1	14.2*	7.3	10.1	4.8	7.0			4.2	6.1	8.1
	3.0	19.9	20.0*	10.7	15.2	6.9	10.0	4.7	6.9			3.8	5.6	8.4
	1.5	15.0*	15.0*	9.8	15.0	6.5	9.7	4.6	6.7			3.7	5.5	8.4
	0	17.8	18.8*	9.3	15.0	6.2	9.4	4.4	6.5			3.8	5.7	8.2
	-1.5	17.7	22.5*	9.1	14.7	6.0	9.1	4.3	6.5			4.2	5.9*	7.7
	-3.0	17.9	19.7*	9.1	13.5*	5.9	8.2*					4.3*	4.3*	6.8
	-4.5	11.1*	11.1*									6.6*	6.6*	4.2

Stick 3.00 m

Under-carriage	m	3.0 m		4.5 m		6.0 m		7.5 m		9.0 m				m
XNLC	9.0			8.6*	8.6*							7.0	7.1*	5.5
	7.5			8.3*	8.3*	6.5	8.2*					4.7	6.4*	7.0
	6.0			9.2*	9.2*	6.5	9.1*	4.3	7.1			3.7	6.1*	8.0
	4.5	17.8	20.0*	9.7	13.5*	6.4	10.1	4.3	7.1			3.2	5.5	8.6
	3.0	17.1	19.8*	9.3	14.9*	6.0	9.9	4.2	7.0			3.0	5.1	8.9
	1.5	15.2	19.3*	8.4	14.9	5.6	9.7	4.0	6.8			2.9	5.0	8.9
	0	14.3	18.8*	7.8	14.9	5.3	9.3	3.7	6.5			2.9	5.2	8.7
	-1.5	14.0	23.0*	7.5	14.6	5.1	9.1	3.6	6.4			3.2	5.6	8.2
	-3.0	14.1	21.0*	7.5	14.4*	4.9	8.9					3.8	4.6*	7.4
	-4.5	14.5	15.4*	7.6	9.0*							4.6*	4.6*	5.6
NLC	9.0			8.6*	8.6*							7.1*	7.1*	5.5
	7.5			8.3*	8.3*	6.9	8.2*					5.0	6.4*	7.0
	6.0			9.2*	9.2*	7.0	9.1*	4.6	7.1			4.0	6.1*	8.0
	4.5	19.0	20.0*	10.4	13.5*	6.8	10.1	4.6	7.1			3.5	5.5	8.6
	3.0	18.3	19.8*	10.0	14.9*	6.4	9.9	4.4	7.0			3.2	5.2	8.9
	1.5	16.8	19.3*	9.1	14.9	6.0	9.8	4.2	6.8			3.1	5.0	8.9
	0	15.7	18.8*	8.5	14.9	5.7	9.4	4.0	6.5			3.2	5.2	8.7
	-1.5	15.4	23.0*	8.1	14.6	5.5	9.1	3.9	6.4			3.4	5.6	8.2
	-3.0	15.5	21.0*	8.1	14.4*	5.3	8.9					4.0	4.6*	7.4
	-4.5	15.4*	15.4*	8.2	9.0*							4.6*	4.6*	5.6
LC	9.0			8.6*	8.6*							7.1*	7.1*	5.5
	7.5			8.3*	8.3*	7.4	8.2*					5.5	6.4*	7.0
	6.0			9.2*	9.2*	7.5	9.1*	5.0	7.1			4.4	6.1*	8.0
	4.5	20.0*	20.0*	11.1	13.5*	7.4	10.1	5.0	7.1			3.8	5.6	8.6
	3.0	19.8*	19.8*	10.9	14.9*	7.0	9.9	4.8	7.0			3.5	5.2	8.9
	1.5	19.0	19.3*	10.0	14.9	6.6	9.8	4.6	6.8			3.4	5.1	8.9
	0	17.9	18.8*	9.3	15.0	6.2	9.4	4.4	6.6			3.5	5.2	8.7
	-1.5	17.6	23.0*	9.0	14.6	6.0	9.1	4.3	6.4			3.8	5.6	8.2
	-3.0	17.7	21.0*	9.0	14.4*	5.8	9.0					4.4	4.6*	7.4
	-4.5	15.4*	15.4*	9.0*	9.0*							4.6*	4.6*	5.6

Stick 3.50 m

Under-carriage	m	3.0 m		4.5 m		6.0 m		7.5 m		9.0 m				m
XNLC	10.5											7.3*	7.3*	3.9
	9.0					6.3	6.3*					5.8*	5.8*	6.2
	7.5					6.6	7.0*	4.3	5.6*			4.2	5.3*	7.6
	6.0			7.2*	7.2*	6.5	7.6*	4.4	7.1*			3.4	5.1*	8.5
	4.5	12.2*	12.2*	9.7	10.6*	6.4	9.5*	4.4	7.2	3.0	5.1	3.0	5.1	9.0
	3.0	17.1	20.1*	9.4	14.4*	6.1	9.9	4.3	7.1	2.9	5.1	2.7	4.7	9.3
	1.5	15.8	20.6*	8.6	14.8	5.7	9.7	4.0	6.9	2.8	5.0	2.6	4.6	9.4
	0	14.4	19.6*	7.9	14.8	5.3	9.4	3.8	6.6	2.7	4.8	2.7	4.7	9.1
	-1.5	13.9	22.1*	7.5	14.5	5.0	9.1	3.6	6.3			2.9	5.1	8.7
	-3.0	13.8	21.9*	7.3	14.4	4.9	8.9	3.5	6.3			3.3	4.7*	7.9
	-4.5	14.2	18.1*	7.4	11.4*	4.9	6.2*					3.7*	3.7*	6.5
NLC	10.5											7.3*	7.3*	3.9
	9.0					6.3*	6.3*					5.8*	5.8*	6.2
	7.5					6.9	7.0*	4.6	5.6*			4.5	5.3*	7.6
	6.0			7.2*	7.2*	7.0	7.6*	4.7	7.1*			3.6	5.1*	8.5
	4.5	12.2*	12.2*	10.4	10.6*	6.8	9.5*	4.7	7.2	3.2	5.1	3.2	5.1	9.0
	3.0	18.3	20.1*	10.1	14.4*	6.5	9.9	4.5	7.1	3.2	5.1	2.9	4.8	9.3
	1.5	17.4	20.6*	9.3	14.8	6.1	9.8	4.3	6.9	3.1	5.0	2.8	4.6	9.4
	0	15.9	19.6*	8.5	14.8	5.7	9.4	4.1	6.6	3.0	4.9	2.9	4.7	9.1
	-1.5	15.4	22.1*	8.1	14.6	5.4	9.1	3.8	6.4			3.1	5.1	8.7
	-3.0	15.3	21.9*	8.0	14.4	5.2	8.9	3.8	6.3			3.6	4.7*	7.9
	-4.5	15.6	18.1*	8.0	11.4*	5.3	6.2*					3.7*	3.7*	6.5
LC	10.5											7.3*	7.3*	3.9
	9.0					6.3*	6.3*					5.8*	5.8*	6.2
	7.5					7.0*	7.0*	5.0	5.6*			4.9	5.3*	7.6
	6.0			7.2*	7.2*	7.5	7.6*	5.1	7.1*			4.0	5.1*	8.5
	4.5	12.2*	12.2*	10.6*	10.6*	7.4	9.5*	5.1	7.2	3.5	5.1	3.5	5.1	9.0
	3.0	19.9	20.1*	10.8	14.4*	7.1	9.9	4.9	7.1	3.5	5.1	3.2	4.8	9.3
	1.5	19.6	20.6*	10.2	14.9	6.6	9.8	4.7	6.9	3.4	5.0	3.1	4.7	9.4
	0	18.1	19.6*	9.4	14.8	6.2	9.4	4.4	6.6	3.3	4.9	3.2	4.8	9.1
	-1.5	17.5	22.1*	9.0	14.6	5.9	9.1	4.2	6.4			3.4	5.1	8.7
	-3.0	17.4	21.9*	8.8	14.4	5.8	8.9	4.2	6.3			3.9	4.7*	7.9
	-4.5	17.8	18.1*	8.9	11.4*	5.8	6.2*					3.7*	3.7*	6.5

Height **Can be slewed through 360°** **In longitudinal position of undercarriage** **Max. reach** *** Limited by hydr. capacity**

The load values are quoted in tons (t) at stick end (without bucket), and may be swung 360° on firm and even ground. Adjacent values are valid for the undercarriage when in the longitudinal position. Capacities are valid for 600 mm wide track pads with adjusting cylinder in optimal position. Indicated loads are based on ISO 10567 standard and do not exceed 75 % of tipping or 87 % of hydraulic capacity (indicated via *). Without bucket cylinder, link and lever the lift capacities will increase by 345 kg. Lifting capacity of the excavator is limited by machine stability and hydraulic capacity.
According to European Standard, EN 474-5: In the European Union excavators have to be equipped with an overload warning device, a load diagram and automatic safety check valves on hoist cylinders and stick cylinder(s), when they are used for lifting operations which require the use of lifting accessories.
Determine maximum load lift from load lift chart displayed in the operator's cab or from load lift chart detailed in the operator's manual supplied with the machine.

Lift capacities

with two-piece boom 6.20 m, counterweight 5.1 t and track pads 600 mm

Stick 2.50 m

Under-carriage	m	3.0 m		4.5 m		6.0 m		7.5 m		9.0 m				m
XNLC	9.0			9.7*	9.7*							9.0*	9.0*	4.7
	7.5			10.2*	10.2*	6.6	9.4*					5.7	7.9*	6.4
	6.0	11.0*	11.0*	10.4	11.8*	6.7	10.4*					4.4	7.3	7.5
	4.5	18.2	20.5*	10.1	14.2*	6.6	10.4	4.4	7.3			3.8	6.3	8.1
	3.0	17.5	20.0*	9.6	15.3*	6.3	10.3	4.3	7.2			3.5	5.9	8.4
	1.5	15.0*	15.0*	8.8	15.3	5.9	10.1	4.1	7.0			3.4	5.8	8.4
	0	15.0	18.8*	8.2	15.4	5.6	9.8	4.0	6.8			3.5	5.9	8.2
	−1.5	14.9	22.5*	8.0	15.3*	5.4	9.5	3.9	6.7			3.8	5.9*	7.7
	−3.0	15.1	19.7*	8.0	13.5*	5.3	8.2*					4.3*	4.3*	6.8
	−4.5	11.1*	11.1*									6.6*	6.6*	4.2
NLC	9.0			9.7*	9.7*							9.0*	9.0*	4.7
	7.5			10.2*	10.2*	7.0	9.4*					6.1	7.9*	6.4
	6.0	11.0*	11.0*	11.0	11.8*	7.1	10.4*					4.7	7.4	7.5
	4.5	19.4	20.5*	10.7	14.2*	7.0	10.4	4.7	7.3			4.1	6.4	8.1
	3.0	18.9	20.0*	10.2	15.3*	6.7	10.3	4.6	7.2			3.7	5.9	8.4
	1.5	15.0*	15.0*	9.4	15.3	6.3	10.1	4.4	7.0			3.6	5.8	8.4
	0	16.5	18.8*	8.9	15.4*	6.0	9.8	4.3	6.8			3.7	6.0	8.2
	−1.5	16.4	22.5*	8.7	15.3*	5.8	9.5	4.2	6.8			4.1	5.9*	7.7
	−3.0	16.6	19.7*	8.7	13.5*	5.7	8.2*					4.3*	4.3*	6.8
	−4.5	11.1*	11.1*									6.6*	6.6*	4.2
LC	9.0			9.7*	9.7*							9.0*	9.0*	4.7
	7.5			10.2*	10.2*	7.5	9.4*					6.6	7.9*	6.4
	6.0	11.0*	11.0*	11.8*	11.8*	7.7	10.4*					5.1	7.4	7.5
	4.5	20.5*	20.5*	11.5	14.2*	7.6	10.5	5.1	7.4			4.4	6.4	8.1
	3.0	20.0*	20.0*	11.2	15.3*	7.2	10.3	5.0	7.2			4.1	5.9	8.4
	1.5	15.0*	15.0*	10.3	15.3*	6.8	10.2	4.8	7.0			3.9	5.8	8.4
	0	18.8	18.8*	9.8	15.4*	6.5	9.8	4.6	6.9			4.1	6.0	8.2
	−1.5	18.7	22.5*	9.6	15.3*	6.3	9.6	4.6	6.8			4.4	5.9*	7.7
	−3.0	18.9	19.7*	9.6	13.5*	6.3	8.2*					4.3*	4.3*	6.8
	−4.5	11.1*	11.1*									6.6*	6.6*	4.2

Stick 3.00 m

Under-carriage	m	3.0 m		4.5 m		6.0 m		7.5 m		9.0 m				m
XNLC	9.0			8.6*	8.6*							7.1*	7.1*	5.5
	7.5			8.3*	8.3*	6.8	8.2*					5.0	6.4*	7.0
	6.0			9.2*	9.2*	6.9	9.1*	4.5	7.4			4.0	6.1*	8.0
	4.5	18.4	20.0*	10.1	13.5*	6.7	10.4	4.5	7.4			3.4	5.8	8.6
	3.0	17.7	19.8*	9.8	14.9*	6.3	10.2	4.4	7.3			3.2	5.4	8.9
	1.5	16.1	19.3*	8.9	15.2	5.9	10.2	4.2	7.1			3.1	5.3	8.9
	0	15.1	18.8*	8.3	15.2	5.6	9.8	4.0	6.8			3.1	5.4	8.7
	−1.5	14.8	23.0*	8.0	15.2	5.4	9.5	3.8	6.7			3.4	5.8*	8.2
	−3.0	14.9	21.0*	7.9	14.4*	5.2	9.4					4.0	4.6*	7.4
	−4.5	15.3	15.4*	8.0	9.0*							4.6*	4.6*	5.6
NLC	9.0			8.6*	8.6*							7.1*	7.1*	5.5
	7.5			8.3*	8.3*	7.2	8.2*					5.3	6.4*	7.0
	6.0			9.2*	9.2*	7.3	9.1*	4.8	7.4			4.2	6.1*	8.0
	4.5	19.7	20.0*	10.7	13.5*	7.1	10.4	4.8	7.4			3.7	5.8	8.6
	3.0	18.9	19.8*	10.5	14.9*	6.8	10.2	4.7	7.3			3.4	5.4	8.9
	1.5	17.6	19.3*	9.6	15.2	6.3	10.2	4.5	7.1			3.3	5.3	8.9
	0	16.6	18.8*	8.9	15.2	6.0	9.8	4.3	6.9			3.4	5.4	8.7
	−1.5	16.3	23.0*	8.6	15.3	5.8	9.6	4.1	6.7			3.7	5.8*	8.2
	−3.0	16.4	21.0*	8.6	14.4*	5.6	9.4					4.3	4.6*	7.4
	−4.5	15.4*	15.4*	8.7	9.0*							4.6*	4.6*	5.6
LC	9.0			8.6*	8.6*							7.1*	7.1*	5.5
	7.5			8.3*	8.3*	7.7	8.2*					5.7	6.4*	7.0
	6.0			9.2*	9.2*	7.8	9.1*	5.2	7.4			4.6	6.1*	8.0
	4.5	20.0*	20.0*	11.5	13.5*	7.7	10.4	5.2	7.5			4.0	5.8	8.6
	3.0	19.8*	19.8*	11.3	14.9*	7.3	10.3	5.1	7.3			3.7	5.4	8.9
	1.5	19.3*	19.3*	10.5	15.2*	6.9	10.2	4.9	7.1			3.6	5.3	8.9
	0	18.8*	18.8*	9.9	15.2*	6.5	9.8	4.7	6.9			3.7	5.4	8.7
	−1.5	18.5	23.0*	9.5	15.3*	6.3	9.6	4.5	6.7			4.0	5.8*	8.2
	−3.0	18.6	21.0*	9.5	14.4*	6.2	9.4					4.6*	4.6*	7.4
	−4.5	15.4*	15.4*	9.0*	9.0*							4.6*	4.6*	5.6

Stick 3.50 m

Under-carriage	m	3.0 m		4.5 m		6.0 m		7.5 m		9.0 m				m
XNLC	10.5											7.3*	7.3*	3.9
	9.0					6.3*	6.3*					5.8*	5.8*	6.2
	7.5					6.8	7.0*	4.5	5.6*			4.4	5.3*	7.6
	6.0			7.2*	7.2*	6.9	7.6*	4.7	7.1*			3.6	5.1*	8.5
	4.5	12.2*	12.2*	10.2	10.6*	6.7	9.5*	4.6	7.5	3.2	5.3*	3.2	5.1*	9.0
	3.0	17.8*	20.1*	9.9	14.4*	6.4	10.2	4.5	7.4	3.1	5.3	2.9	5.0	9.3
	1.5	16.7	20.6*	9.1	15.2*	6.0	10.1	4.3	7.2	3.0	5.2	2.8	4.9	9.4
	0	15.3	19.6*	8.3	15.1	5.6	9.8	4.0	6.9	2.9	5.1	2.9	5.0	9.1
	−1.5	14.7	22.1*	7.9	15.2*	5.3	9.5	3.8	6.7			3.1	5.4	8.7
	−3.0	14.7	21.9*	7.8	14.7*	5.2	9.3	3.8	6.4*			3.5	4.7*	7.9
	−4.5	15.0	18.1*	7.8	11.4*	5.2	6.2*					3.7*	3.7*	6.5
NLC	10.5											7.3*	7.3*	3.9
	9.0					6.3*	6.3*					5.8*	5.8*	6.2
	7.5					7.0*	7.0*	4.8	5.6*			4.7	5.3*	7.6
	6.0			7.2*	7.2*	7.3	7.6*	5.0	7.1*			3.8	5.1*	8.5
	4.5	12.2*	12.2*	10.6*	10.6*	7.2	9.5*	4.9	7.5	3.4	5.3*	3.4	5.1*	9.0
	3.0	18.9	20.1*	10.5	14.4*	6.9	10.2	4.8	7.4	3.4	5.3	3.1	5.0	9.3
	1.5	18.2	20.6*	9.7	15.2*	6.4	10.1	4.6	7.2	3.3	5.2	3.0	4.9	9.4
	0	16.8	19.6*	9.0	15.1	6.0	9.8	4.3	6.9	3.2	5.1	3.1	5.0	9.1
	−1.5	16.2	22.1*	8.6	15.2*	5.7	9.5	4.1	6.7			3.3	5.4	8.7
	−3.0	16.2	21.9*	8.4	14.7*	5.6	9.3	4.0	6.4*			3.8	4.7*	7.9
	−4.5	16.5	18.1*	8.5	11.4*	5.6	6.2*					3.7*	3.7*	6.5
LC	10.5											7.3*	7.3*	3.9
	9.0					6.3*	6.3*					5.8*	5.8*	6.2
	7.5					7.0*	7.0*	5.2	5.6*			5.1	5.3*	7.6
	6.0			7.2*	7.2*	7.6*	7.6*	5.4	7.1*			4.2	5.1*	8.5
	4.5	12.2*	12.2*	10.6*	10.6*	7.7	9.5*	5.3	7.5	3.7	5.3*	3.7	5.1*	9.0
	3.0	20.1*	20.1*	11.2	14.4*	7.4	10.2	5.2	7.4	3.7	5.3	3.4	5.0	9.3
	1.5	20.3	20.6*	10.7	15.2*	7.0	10.1	4.9	7.2	3.6	5.2	3.3	4.9	9.4
	0	19.0	19.6*	9.9	15.1*	6.6	9.9	4.7	6.9	3.5	5.1	3.4	5.0	9.1
	−1.5	18.5	22.1*	9.5	15.2*	6.3	9.5	4.5	6.7			3.6	5.4	8.7
	−3.0	18.4	21.9*	9.3	14.7*	6.1	9.3	4.4	6.4*			4.2	4.7*	7.9
	−4.5	18.1*	18.1*	9.4	11.4*	6.1	6.2*					3.7*	3.7*	6.5

Height **Can be slewed through 360°** **In longitudinal position of undercarriage** **Max. reach** *** Limited by hydr. capacity**

The load values are quoted in tons (t) at stick end (without bucket), and may be swung 360° on firm and even ground. Adjacent values are valid for the undercarriage when in the longitudinal position. Capacities are valid for 600 mm wide track pads with adjusting cylinder in optimal position. Indicated loads are based on ISO 10567 standard and do not exceed 75 % of tipping or 87 % of hydraulic capacity (indicated via *). Without bucket cylinder, link and lever the lift capacities will increase by 345 kg. Lifting capacity of the excavator is limited by machine stability and hydraulic capacity.
According to European Standard, EN 474-5: In the European Union excavators have to be equipped with an overload warning device, a load diagram and automatic safety check valves on hoist cylinders and stick cylinder(s), when they are used for lifting operations which require the use of lifting accessories.
Determine maximum load lift from load lift chart displayed in the operator's cab or from load lift chart detailed in the operator's manual supplied with the machine.

Attachments

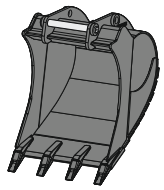

Backhoe bucket TL 04-02

Mounting		direct mounting, SWA 48 mechanical, SWA 48 hydraulic, SWA 48 Solidlink, Oilquick OQ 70, Oilquick OQ 70/55, S 70 mechanical, S 70/55 mechanical								
Cutting width	mm	650	850	1,050	1,250	1,400	1,500	1,600	1,700	1,800
Capacity	m³	0.55	0.75	0.95	1.15	1.35	1.45	1.55	1.85	2.00
Weight[1]	kg	545	630	720	815	875	890	945	1,090	1,133

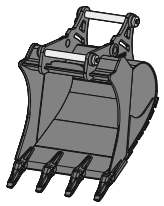

2in1 bucket HTL 04-02

Mounting		SWA 48 mechanical, SWA 48 hydraulic, SWA 48 Solidlink								
Cutting width	mm	650	850	1,050	1,250	1,400	1,500	1,600	1,700	1,800
Capacity	m³	0.55	0.75	0.95	1.15	1.35	1.45	1.55	1.85	2.00
Weight[1]	kg	612	697	787	882	942	978	1,016	1,179	1,223

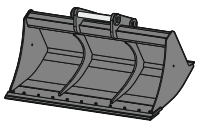

Ditch cleaning bucket GRL rigid 04

Mounting		direct mounting, SWA 48 mechanical, SWA 48 hydraulic, SWA 48 Solidlink			
Cutting width	mm	1,500	2,000	2,000	2,400
Capacity	m³	0.50	0.70	1.20	0.85
Weight[1]	kg	425	522	637	605

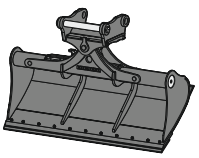

Ditch cleaning bucket GRL 90

Mounting		direct mounting, SWA 48 mechanical, SWA 48 hydraulic, SWA 48 Solidlink										
Cutting width	mm	1,600	1,600	2,000	2,000	2,000	2,200	2,200	2,200	2,400	2,400	2,800
Capacity	m³	0.55	0.80	0.50	0.70	1.00	0.80	1.15	1.40	0.85	1.25	1.85
Weight[1]	kg	690	850	695	875	935	910	985	995	890	1,000	1,090
Tilt angle		2 x 50°	2 x 50°	2 x 50°	2 x 50°	2 x 50°	2 x 50°	2 x 50°	2 x 50°	2 x 50°	2 x 50°	2 x 50°

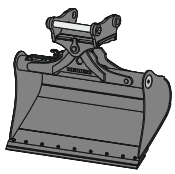

Tilt bucket SL 90

Mounting		direct mounting, SWA 48 mechanical, SWA 48 hydraulic, SWA 48 Solidlink						
Cutting width	mm	1,400	1,500	1,500	1,600	1,600	1,600	1,600
Capacity	m³	0.55	0.60	1.20	0.80	1.00	1.35	1.55
Weight[1]	kg	715	738	970	820	890	970	1,030
Tilt angle		2 x 50°	2 x 50°	2 x 50°	2 x 50°	2 x 50°	2 x 50°	2 x 50°

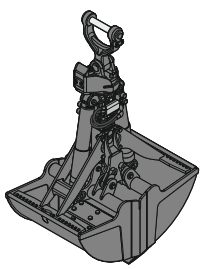

Clamshell grab

Mounting		direct mounting, SWA 48 mechanical, SWA 48 hydraulic, SWA 48 Solidlink, SWA 66 mechanical, SWA 66 hydraulic, SWA 66 Solidlink, Oilquick OQ 70, Oilquick OQ 70/55, Oilquick OQ 80				
GMZ 30 Clamshell buckets						
Shell width	mm	600	800	1,000	1,200	
Capacity[2]	m³	0.38	0.52	0.65	0.80	
Opening width	mm	1,644	1,644	1,644	1,644	
Weight[3]	kg	1,050	1,130	1,210	1,290	
GMZ 40 Clamshell buckets						
Shell width	mm	800	1,000	1,200	1,400	1,600
Capacity[2]	m³	0.65	0.85	1.05	1.20	1.40
Opening width	mm	1,962	1,962	1,962	1,962	1,962
Weight[3]	kg	1,345	1,430	1,520	1,605	1,695

[1] based on an attachment in a standard design with SWA 48 Solidlink quick coupler mounting
[2] capacity specifications are theoretically determined values; fill level varies depending on the material being loaded
[3] with XHD suspension

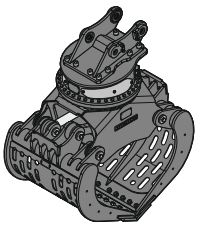

Sorting grab SG 30B

Mounting		direct mounting, SWA 48 mechanical, SWA 48 hydraulic, SWA 48 Solidlink, SWA 66 mechanical, SWA 66 hydraulic, SWA 66 Solidlink, Oilquick OQ 70, Oilquick OQ 70/55, Oilquick OQ 80							
Shell type		perforated[2]			ribbed[2]			closed[2]	Stone shell[3]
Shell width	mm	1,000	1,200	1,400	1,000	1,200	1,400	1,000	1,020
Capacity	m³	0.85	1.00	1.15	0.75	0.90	1.05	0.85	0.85
Max. closing force	kN	80	80	80	80	80	80	80	80
Weight[1]	kg	1,485	1,560	1,635	1,565	1,675	1,780	1,515	1,815

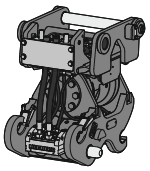

Tilt unit LiTiU 48[5] [6]

Mounting machine side		SWA 48 Solidlink
Mounting attachment side		SWA 48 hydraulic, SWA 48 Solidlink
Weight[4]	kg	740
Tilt		2 x 45°

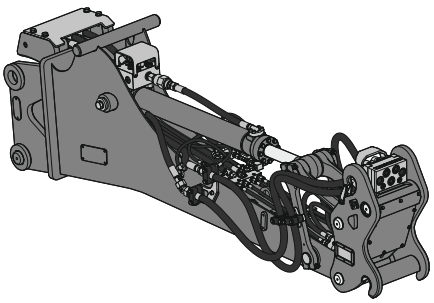

Stick extension

Mounting machine side		SWA 48 mechanical, SWA 48 hydraulic, SWA 48 Solidlink, SWA 48 Solidlink-10	
LS 12			
Mounting attachment side		direct mounting, SWA 33 mechanical, SWA 33 mechanical Solidlink[8], SWA 33 hydraulic[10], SWA 33 Solidlink[9] [10] [11]	
Length	m	2.25	2.70
Weight[7]	kg	650	700
LS 18			
Mounting attachment side		direct mounting, SWA 33 mechanical, SWA 33 mechanical Solidlink[8], SWA 33 hydraulic[10], SWA 33 Solidlink[9] [10] [11], SWA 48 mechanical, SWA 48 mechanical Solidlink[8], SWA 48 hydraulic[10], SWA 48 Solidlink[9] [10] [11]	
Length	m	2.65	3.05
Weight[7]	kg	1,130	1,190

[1] without quick coupler mounting
[2] with standard bolt-on cutting edge
[3] with Liebherr teeth Z 40 C
[4] based on standard tilt unit LiTiU 48 with SWA 48 Solidlink quick coupler mountings on both sides (underside of tilt unit and machine side quick coupler mounting)
[5] on the machine side, a 14-pin signal contact strip is always required; switching takes place between tilting the LiTiU and the grab rotation circle for the attachment
[6] on the machine side, the control unit for the second quick coupler is always required
[7] based on standard stick extension LS 12 / 18 with SWA 33 / 48 Solidlink quick coupler mountings on both sides (underside of stick extension and machine side mounting) and electric switchover
[8] attachment with high pressure circuit only possible with the manual switchover tipping cylinder or an extended hydraulic circuit on the carrier machine
[9] attachment with high pressure circuit only possible with the electric / manual switchover tipping cylinder or an extended hydraulic circuit on the carrier machine
[10] 14-pin signal contact strip is required, for example to control and monitor the hydraulic quick coupling system on the stick extension on the attachment side or to transfer electrical signals for the switchover
[11] to use different hydraulic circuits, either Solidlink 33-9 / Solidlink 48-10 is required on the machine side, or a switchover system using the equipment power socket, controlled via the carrier machine's signal contact strip

Serial equipment

Undercarriage

- Lashing eyes
- Sprocket with dirt ejector
- Track and carrier rollers, sealed and lifetime-lubricated

Uppercarriage

- Access platforms without protruding parts
- Anti-skid surfaces
- Automatic swing brake lock
- Centralised lubrication system (automatic)
- DEF tank filling indicator
- DEF tank lockable access hatch
- Engine hood with gas spring opening
- Filters accessible from ground level
- Handrails
- Hydraulic oil level, visible from ground level
- Lockable service doors
- Lockable storage and accessories compartment
- Lockable storage box
- Main switch, accessible from ground level
- Main switch, electric, with timer
- Main switch, manual, lockable
- Positioning swing brake manual
- Protection grid on radiator fan
- Safe uppercarriage side access platform
- Sound insulation
- Swing-out radiators
- Windshield washer fluid tank, accessible from ground level

Hydraulic system

- Dedicated swing circuit
- Filter with integrated fine filters
- Hydraulic pressure measuring ports
- Liebherr Positive Control system with 2 independent circuits
- Magnetic rod
- Pressure accumulator for controlled lowering of equipment with engine turned off

Engine

- Air filter with automatic dust ejector
- Automatic engine idling / speed increase, controlled via joystick sensors
- Common-Rail injection system
- Engine oil dipstick
- Exhaust gas after-treatment system – DOC + SCR Filter
- Fixed geometry turbocharger
- Fuel fine filter
- Fuel pre-filter and water separator
- Fuel priming pump
- Intercooler
- Power Pack EU Stage V

Cab

- 9" multifunction colour touchscreen
- Air conditioning, automatic, tri-zone, controlled via display
- Armrests adjustable in length, height and inclination
- Bottle holder
- Cab air filters housing, accessible from ground level
- Cab door sliding windows
- Cigarette lighter
- Coat hook
- DEF consumption on touchscreen
- DEF level on touchscreen
- Electric socket in cab (12 V)
- Electric socket in cab (24 V)
- Emergency hammer
- Engine coolant level, visible from the cab
- Engine oil level on touchscreen
- Fuel consumption on touchscreen
- Fuel level on touchscreen
- Hydraulic oil level on touchscreen
- Interior lighting
- Laminated right hand side window
- LiDAT Plus (Liebherr data transfer system)
- Mechanical hour meter, visible from ground level
- Mobile phone storage net
- Movement priority between swing and boom, adjustable via touchscreen
- Movement priority for stick-in, adjustable via touchscreen
- Operating modes
- Power modes
- Rain hood over front window opening
- Rearview mirror
- Rear view monitoring camera
- Rear window emergency exit
- Right hand side view monitoring camera
- Roll-down sun blinds for windscreen and roof window
- ROPS safety cab structure (ISO 12117-2)
- Rubber floor mat, fixed on floor and removable
- Shortkey buttons on joystick configurable
- Stepless adjustable engine speed
- Storage box
- Storage nets
- Storage spaces
- Swing braking torque adjustable via touchscreen
- Swing drive gearbox oil level, visible from the cab
- Tiltable console left
- Tinted windows
- Visco-elastic damping
- Windscreen wiper and washer

Equipment

- Anti-drift system boom cylinders
- Anti-drift system stick cylinder
- Boom cylinders regeneration
- Pivot points made of cast steel
- SAE split flanges on high pressure lines
- Stick cylinder regeneration

Equipment standard / option

Undercarriage

Chain guide 1 piece	●
Chain guide 3 pieces	+
Cover and base plate for undercarriage centre section	●
Reinforced cover and base plate for undercarriage centre section	+
Special painting	+
Steps	●
Steps wide	+
Track chains cleaner	+
Track pads triple grouser 600 mm	●
Track pads triple grouser 700 / 750 / 800 / 900 mm	+
Track pads triple grouser reinforced 600 / 700 / 750 / 800 mm	+
Tracks, sealed and greased	●
Tracks, sealed and greased, reinforced	+
Undercarriage LC	+
Undercarriage NLC	+
Undercarriage XNLC	+
Undercarriage storage compartment	+

Uppercarriage

Batteries high capacity	+
Batteries standard capacity	●
Boxing ring	+
Catwalk tiltable front left	+
Counterweight heavy 5.1 t	+
Counterweight standard 4.6 t	●
Electric socket on uppercarriage (24 V)	+
Extended tool set including tool box	+
External starting aid (24 V)	+
Front right rearview mirror	+[1]
Fuel anti-theft protection	+
Headlight on uppercarriage, front left, LED+, 1 piece, protection included	+[1]
Headlight on uppercarriage, front right, LED, 1 piece, protection included	●[1]
Headlight on uppercarriage, front right, LED+, 1 piece, protection included	+[1]
Headlight on uppercarriage, lateral left, LED+, 1 piece	+[1]
Headlight on uppercarriage, lateral right, LED+, 1 piece	+[1]
Headlights on uppercarriage, rear, LED+, 2 pieces	+[1]
Lighting for tank area	+[1]
Lighting for uppercarriage access	+[1]
Lockable fuel tank cap	●
Lockable fuel tank cap with padlock	+
Reflective warning stickers	+
Rotating beacons on uppercarriage, rear, LED, 2 pieces	+
Skyview 360°	+
Special painting	+
Tank refilling pump fuel	+
Tool set including storage case	●
Uppercarriage bottom and side protection	+
Uppercarriage bottom closure sheets	●

Hydraulic system

Bypass filter for hydraulic oil	+
Filter for hydraulic hammer return flow	+
High pressure circuit bypass	+
High pressure circuit flow summation	+
High pressure circuit switchable on pedals or mini-joystick	+
High pressure circuit with Tool Control (20 attachment adjustments on display)	+
Leak oil line for attachment	+
Liebherr hydraulic oil	●
Liebherr hydraulic oil, adapted for extreme climate conditions	+
Liebherr hydraulic oil, biodegradable	+
Medium pressure circuit	+

Engine

Air pre-filter with cyclonical dust trap	+
Automatic engine shutdown after idling	+
Engine shut-down with overrun	+
Lighting for engine compartment	+[1]
Pre-heating system for fuel	+
Radiator fine mesh protection grid	+
Reversible fan drive	+

Equipment standard / option

Cab

2" seat belt with retractor	●
3" seat belt with retractor, orange colour	+
4-points seat belt	+
Acoustic travel alarm deactivatable	+
Auxilary heater programmable	+
Bottom windscreen wiper	+
Coming / Leaving Home	+[1]
Cool box (12 V)	+
Dark tinted windows	+
Electrically adjustable and heated outside rear-view mirrors	+[1]
Electronic immobiliser	+
Emergency stop in cab	+
FGPS front guard	+
FGPS front guard tiltable	+
Fire extinguisher	+
First-aid box	+
Footrest	+
FOPS top guard	+
FOPS top guard flat	+
Handrests elevated for joysticks	+
Headlights on cab, front, LED, 2 pieces	●[1]
Headlights on cab, front, LED+, 2 pieces	+[1]
Headlights on cab roof, front, LED+, 2 pieces	+[1]
Impact resistant one-piece windscreen	+
Impact resistant roof window	+
Independent travel	+[1]
Integral protection guard	+
Laminated roof window	●
Lightbar on cab	+
Lighting for cab access	+[1]
Luminosity control (LED+ headlights)	+[1]
Mini-joystick proportional	+
Movement restriction for boom	+
Movement restriction for stick	+
Operator's seat Comfort	●
Operator's seat Premium	+
Overload warning system	+
Personalised operator profile	+
Preparation for tiltrotator	+
Radio Comfort	+
Radio pre-installation	●
Remote cab lock	+[1]
Retractable laminated two-piece windscreen	●
Roof sun shield	+
Roof window wiper	+
Rotating beacon on cab, LED, 1 piece	+
Seat belt reminder	+
Smart Key	+[1]
Special painting	+
Straight travel via mini-joystick	+[1]
Sun visor	+
Switch between high pressure and bucket cylinder controls	+
Travel speed management	+[1]
Windscreen bottom protection grid	+

Equipment

Boom cylinders rod protection	+
Bucket cylinder rod protection	+
Centralised lubrication extended for connecting link	+
Floating boom	+
Grapple hydraulic lines (bucket cylinder inactive)	+
Headlight guard on boom, right	+
Headlight guards on boom, right and left	+
Headlight on boom, left, LED+, 1 piece	+[1]
Headlight on boom, right, LED, 1 piece	●[1]
Headlight on boom, right, LED+, 1 piece	+[1]
Headlight on stick, bottom, LED+, 1 piece	+[1]
Hydraulic hose guard Solidlink	+
Liebherr bucket range	+
Liebherr tooth system	+
Load holding valve for bucket cylinder	+
Lubrication hoses protection on stick	+
Mono boom 6.00 m	+
Mono boom straight 6.20 m	+
Pipe fracture safety valve for stick cylinder	●
Pipe fracture safety valves for boom cylinders	●
Quick coupler SWA 48 hydraulic	+
Quick coupler SWA 48 mechanical	+
Solidlink electric signal plug	+
Solidlink for quick coupler SWA 48 hydraulic	+
Special painting	+
Stick 2.50 m	+
Stick 3.00 m	+
Stick 3.50 m	+
Stick bottom protection	+
Tool Management	+
Two-piece boom 6.20 m	+

Assistance system

Machine guidance system Leica 2D passive – "3D ready"	+
Machine guidance system Leica 2D semi-automatic – "3D ready"	+
Machine guidance system Leica 3D passive	+
Machine guidance system Leica 3D semi-automatic	+
Preparation for machine guidance system	+
Preparation for weighing system	+

● = Standard, + = Option
[1] Equipment not individually available, but only as predefined packages
Non-exhaustive list, please contact us for further information.

Options and / or special equipment, supplied by vendors other than Liebherr, are only to be installed with the knowledge and approval of Liebherr in order to retain warranty.

Liebherr-France SAS
2 avenue Joseph Rey, B.P. 90287 · 68005 Colmar Cedex, France · Phone +33 389 21 30 30
info.lfr@liebherr.com · www.liebherr.com · www.facebook.com/LiebherrConstruction

All illustrations and data may differ from standard equipment. Subject to change without notice.
All indicated loads are based in accordance with ISO 9248. RG-BK · LFR/SP-12247276-web-02.26_enGB