Installation Guide

Quality, Design and Innovation

home.liebherr.com/fridge-manuals

LIEBHERR

Contents

1 General safety instructions ... 2

2 Installation requirements ... 3
2.1 Installation site ... 3
2.2 Position in space ... 3

3 Appliance dimensions ... 3

4 Recess dimensions ... 5

5 Ventilation requirements ... 5

6 Custom panel weights ... 6

7 Water connection* ... 6
7.1 Dimensions for the water connection ... 6
7.2 Water pressure ... 6

8 Transporting the appliance ... 7
8.1 Transporting the appliance for initial use ... 7
8.2 Transporting the appliance after initial use ... 7

9 Unpacking the appliance ... 7

10 Setting up the appliance ... 7
10.1 After installation ... 7

11 Installing multiple appliances ... 7

12 Disposing of packaging ... 8

13 Explanation of symbols used ... 8

14 ** freezer compartment door* ... 9**
14.1 Moving the door hinge ... 9

15 Reversing the door ... 9

16 Connecting the appliance to the water supply*.. 11
16.1 Connecting the hose ... 11
16.2 Checking the water system ... 12

17 Installing the appliance in the recess ... 12

18 Cabinet fronts ... 19
18.1 Dimensions ... 19
18.2 Mounting the cabinet front(s) ... 20
18.3 Setting the clearance to avoid collision ... 20

19 Water tank* ... 20
19.1 Inserting the water tank ... 20

20 Water filter* ... 20
20.1 Inserting the water filter ... 21

21 Connecting the appliance to the power supply 21

The manufacturer is continually working on the further development of all types and models. Please be aware that we reserve the right to make changes to the shape, equipment and technology.

Symbol	Explanation
	Read instructions Please read the information in these instructions carefully to understand all of the benefits of your new appliance.
	Additional information on the Internet The digital manual with additional information and in other languages can be found via the QR code on the front of the manual or by entering the service number at **home.liebherr.com/fridge-manuals**. The service number can be found on the serial tag: 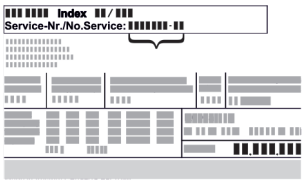 *Fig.* Example illustration
	Check appliance Check all parts for transport damage. If you have any complaints, please contact your agent or customer service.
	Differences These instructions apply to a range of models, so differences are possible. Sections that apply to certain models only are marked with an asterisk (*).
	Instructions and results Instructions are marked with a ▶. Results are marked with a ▷.
	Videos Videos about the appliances are available on the YouTube channels of Liebherr-Hausgeräte.

Open source licences:

The appliance contains software components that use open source licences. Information on the open source licences used can be found here: **home.liebherr.com/open-source-licences**

1 General safety instructions

- Please keep this assembly manual in a safe place so you can refer back to it at any time.
- If you pass the appliance on, please hand this assembly manual to the next user.
- Read this assembly manual carefully before installation and use to ensure safe and correct use of the appliance. Follow the instructions, safety instructions and warning messages included at all times. They are important for ensuring you can operate and install the appliance safely and without any problems.
- First read the general safety instructions in the "General safety instructions" section of the **operating instructions**, which accompany these installation instructions, and follow them. If you cannot find the **operating instructions**, you can download the **operating instructions** from the internet by entering the service number at **home.liebherr.com/fridge-manuals**.

*** Depending on model and options**

The service number can be found on the serial tag:

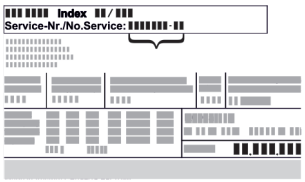

- **Observe the warning messages and other detailed information in the other sections when installing the appliance:**

⚠	DANGER	identifies a situation involving direct danger which, if not obviated, may result in death or severe bodily injury.
⚠	WARNING	identifies a dangerous situation which, if not obviated, may result in death or severe bodily injury.
⚠	CAUTION	identifies a dangerous situation which, if not obviated, may result in minor or medium bodily injury.
	NOTICE	identifies a dangerous situation which, if not obviated, may result in damage to property.
	Note	identifies useful instructions and tips.

2 Installation requirements

The installation conditions are crucial to ensure that you can operate your appliance safely, efficiently and without problems.

- Observe all safety instructions.
- Consider the location and position in the room.

⚠ **WARNING**
Danger of fire due to incorrect positioning!
If the mains cable or plug touches the back of the appliance, the vibration can damage the mains cable or the plug resulting in a short circuit.
▶ Make sure the mains cable is not trapped under the appliance when you position the appliance.
▶ Stand the appliance so that it is not touched by connectors or main cables.
▶ Do not connect any appliances to sockets in the area of the back of the appliance.
▶ Do **not** place and operate multi-sockets/power distributors and other electronic devices (such as halogen transformers) at the back of the appliances.

⚠ **WARNING**
Fire hazard due to dampness!
If live parts or the mains lead become damp this may cause short circuits.
▶ The appliance is designed for use in enclosed areas. Do not operate the appliance outdoors or in areas where it is exposed to splash water or damp conditions.

⚠ **WARNING**
Leaking coolant and oil!
Fire. The coolant contained in the appliance is eco-friendly, but also flammable. The oil contained in the appliance is flammable. Escaping coolant and oil can ignite if the concentration is high enough and in contact with an external heat source.
▶ Do not damage the pipelines of the coolant circuit and the compressor.

2.1 Installation site

- Only operate the appliance when it is installed.
- If the appliance is installed in a very damp environment, condensation may form on the appliance exterior.
  Always make sure there is good ventilation and aeration at the installation site.
- The more refrigerant there is in the appliance, the larger than room must be in which it is located. In rooms that are too small, a leak can product a flammable gas/air mixture. For every 8 g of refrigerant, the installation room must be at least 1 m^3 in size. Information on the refrigerant contained is given on the type plate inside the appliance.
- The floor on which the appliance stands must be horizontal and level.

2.2 Position in space

- Do not install the appliance in direct sunlight or near radiators or similar sources of heat.
- Only fit the appliance into solid units.
- Use in hazardous areas is not permitted.

3 Appliance dimensions

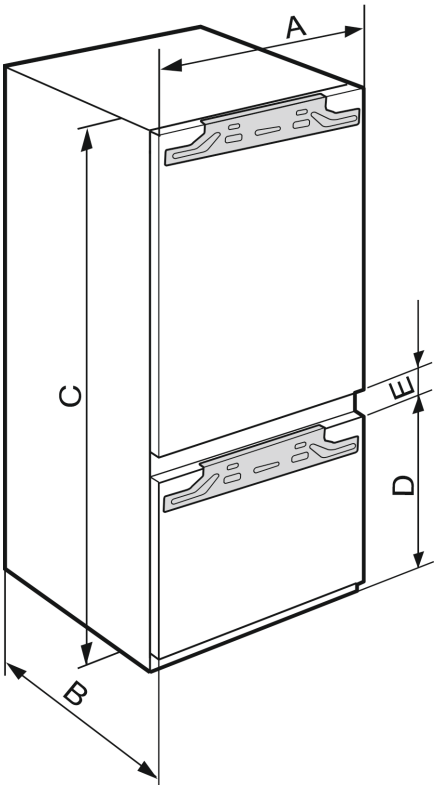

Fig. 1

Appliance dimensions

ICB..(i) 51..	
A (mm)	559
B (mm)	546
C (mm)	1770
D (mm)	549
E (mm)	15

Niche height 1780 - combinations with 2 freezer compartments

IC(B)(N)..(i) 51.. / ICBNbsci 5173 / IKG 51Ve03 / IKGN 51Vc03 / IKGBN 51VD23i / ICNbsci 5173 / SICN..i 51.. / IKGN 51Ve03 / IKGNc 1783	
A (mm)	559
B (mm)	546
C (mm)	1770
D (mm)	695
E (mm)	15

Niche height 1780 - combinations with 3 freezer compartments

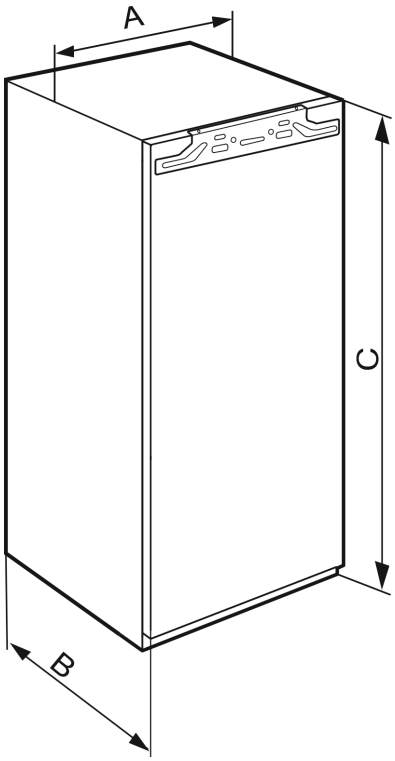

Fig. 2

IFN..(i) 35..	
A (mm)	559
B (mm)	546
C (mm)	712

Niche height 720 - single-door appliances

IFN..(i) 39.. / IR..(i) 39.. / SIBa20i 3905 / SIFN..i 39..	
A (mm)	559
B (mm)	546
C (mm)	872

Niche height 880 - single-door appliances

IR(B)..(i) 40..	
A (mm)	559
B (mm)	546
C (mm)	1022

Niche height 1020 - single-door appliances

IR(B)..(i) 41.. / IRBbsbi 4170 / SIFN..i 41..	
A (mm)	559
B (mm)	546
C (mm)	1213

Niche height 1220 - single-door appliances

IR(B)..(i) 45.. / IRBbsbi 4570 / SIFN..i 45..	
A (mm)	559
B (mm)	546
C (mm)	1395

Niche height 1400 - single-door appliances

IRB..i 48..	
A (mm)	559
B (mm)	546
C (mm)	1572

Niche height 1580 - single-door appliances

IR(B)(P)..(i) 51.. / IRD..i 51.. / IRBbsci 5170 / IRBbsci 5171 / IRBPbsci 5170 / IKB 51Vc50i / IKB 51Vc51i / IK 51Ve00 / IK 51Ve01 / IK 51Vd00 / SIFN..(i) 51.. / SIFNbsdi 51.. / IK(B).. 1780 / IK(B).. 1784 / SIGN 51Vd28	
A (mm)	559
B (mm)	546
C (mm)	1770

Niche height 1780 - single-door appliances

*** Depending on model and options**

4 Recess dimensions

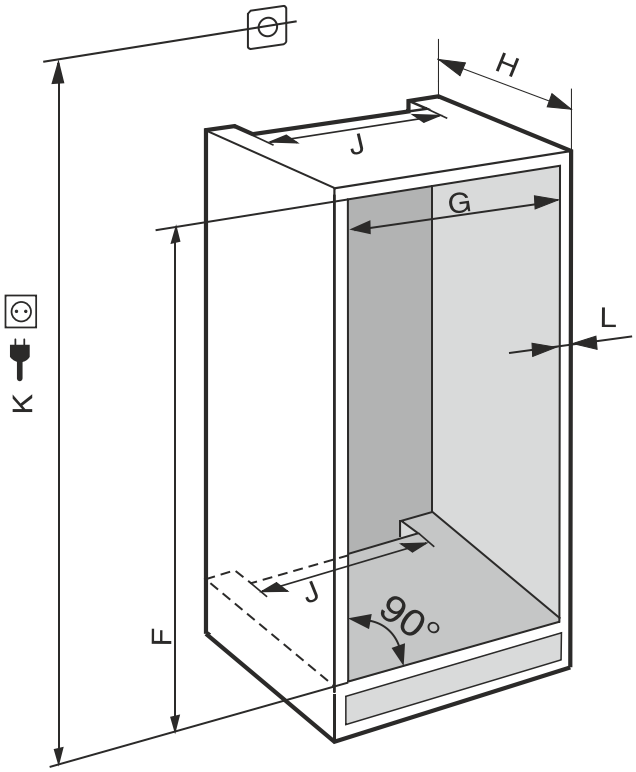

Fig. 3 ***(K):*** *max. 2100 mm*

Observe the following information for devices with a fixed water connection:

- Water connection (see 7 Water connection*)
- Connecting the device to the water supply (see 16 Connecting the appliance to the water supply*)

IFN..(i) 35..	
F (mm)	714 to 730
G (mm)	560 to 570
H (mm)	min. 550, recommended 560
J (mm)	min. 500
L (mm)	max. 19

IFN..(i) 39.. / IR..(i) 39.. / SIBa20i 3905 / SIFN..i 39..	
F (mm)	874 to 890
G (mm)	560 to 570
H (mm)	min. 550, recommended 560
J (mm)	min. 500
L (mm)	max. 19

IR(B)..(i) 40..	
F (mm)	1024 to 1040
G (mm)	560 to 570
H (mm)	min. 550, recommended 560
J (mm)	min. 500
L (mm)	max. 19

IR(B)..(i) 41.. / IRBbsbi 4170 / SIFN..i 41..	
F (mm)	1216 to 1236

IR(B)..(i) 41.. / IRBbsbi 4170 / SIFN..i 41..	
G (mm)	560 to 570
H (mm)	min. 550, recommended 560
J (mm)	min. 500
L (mm)	max. 19

IR(B)..(i) 45.. / IRBbsbi 4570 / SIFN..i 45..	
F (mm)	1397 to 1413
G (mm)	560 to 570
H (mm)	min. 550, recommended 560
J (mm)	min. 500
L (mm)	max. 19

IRB..i 48..	
F (mm)	1574 to 1590
G (mm)	560 to 570
H (mm)	min. 550, recommended 560
J (mm)	min. 500
L (mm)	max. 19

IC(B)(N)..(i) 51.. / ICBNbsci 5173 / IKG 51Ve03 / IKGN 51Vc03 / ICNbsci 5173 / IKGN 51Ve03 / IKGBN 51Vd23i / IR(B)(P)..(i) 51.. / IRD..i 51.. / IRBbsci 5170 / IRBbsci 5171 / IRBPbsci 5170 / IKB 51Vc50i / IKB 51Vc51i / IK 51Vd00 / IK 51Ve00 / IK 51Ve01 / IK(B).. 1780 / IK(B).. 1784 / IKGNc 1783 / SICN..i 51.. / SIFN..(i) 51.. / SIFNbsdi 51.. / SIGN 51Vd28	
F (mm)	1772 to 1788
G (mm)	560 to 570
H (mm)	min. 550, recommended 560
J (mm)	min. 500
L (mm)	max. 19

The specified energy consumption was determined with a kitchen unit depth of 560 mm. The appliance will work properly at a kitchen unit depth of 550 mm, but with a slightly higher energy consumption.

▶ Check the wall thickness of adjacent cabinets: They must have a minimum of 16 mm .
▶ Only fit the appliance into stable, solid kitchen units. Secure the unit against tipping.
▶ Align the cabinets with a spirit level and a try square. If necessary, level them by putting something underneath them.
▶ Make sure floor and the side panels of the cabinet are at right angles to each other.

5 Ventilation requirements

NOTICE
Covered vents!
Damage. Appliance can overheat, which can reduce the service life of various parts of the appliance and lead to operational impairments.

▶ Always make sure there is good ventilation.
▶ Always keep vents or ventilation grids in the appliance housing and in the kitchen furniture (fully integrated appliance) unobstructed.
▶ Always keep the fan air vents unobstructed.

Always follow the required ventilation gaps:

- The depth of the ventilation shaft at the back of the cabinet must be at least 38 mm.
- At least 200 cm^2 is required for the ventilation gap cross sections in the plinth and the housing cabinet.
- As a rule, the larger the ventilation cross-section, the more efficiently the appliance will run.

Sufficient ventilation is required for the operation of the appliance. The ventilation grids provided ensure an effective ventilation cross-section on the appliance of 200 cm^2. If you replace the ventilation grids with a cover plate the ventilation cross-section must be as least as large as the ventilation grid provided by the manufacturer.

6 Custom panel weights

NOTICE
An excessively heavy custom panel can potentially cause damage!
If the custom panel is too heavy, damage to the hinges cannot be ruled out, which may compromise the functionality of the unit.

▶ Before fitting the custom panel, ensure the custom panel does not exceed the permissible weight.

Recess height (mm)*	**Maximum weight of custom panel (kg)***
720	16
880	16
1020	13
1220	19
1400	21
1580	22
1780	26

Single-door fridges and freezers

Niche height (mm)*	**Maximum weight of custom panel (kg)***	
	Fridge compartment door*	Freezer compartment door*
1780	18	12

Customising combinations

7 Water connection*

If your appliance has a fixed water connection, a hose is supplied with it.

Note
You can purchase a hose of a different length as an accessory.

Overview of dimensions for the water connection:	(see 7.1 Dimensions for the water connection)
Requirements for the water pressure:	(see 7.2 Water pressure)
Make the water connection:	(see 16 Connecting the appliance to the water supply*)

7.1 Dimensions for the water connection

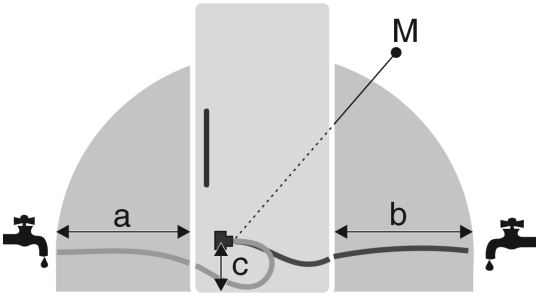

Fig. 4

(a) Maximum available hose length*
(b) Maximum available hose length*
(c) Distance of solenoid valve to floor*
(M) Solenoid valve*

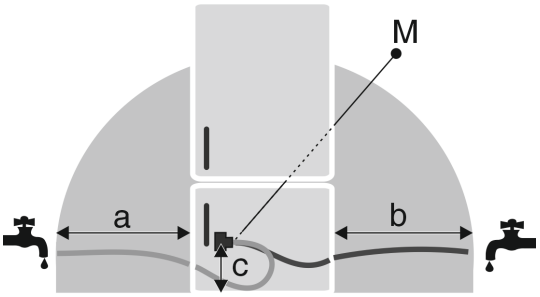

Fig. 5

(a) Maximum available hose length*
(b) Maximum available hose length*
(c) Distance of solenoid valve to floor*
(M) Solenoid valve*

a	b	c
~ 1200 mm	~ 1200 mm	~ 55 mm

7.2 Water pressure

The water connection line and solenoid valve of the appliance are suitable for a water pressure of up to 1 MPa (10 bar).

To ensure that the appliance functions correctly (flow rate, ice cube size, noise level), maintain the following water pressure:

Water pressure:	
bar	MPa
1.5 to 6.2	0.15 to 0.62

Water pressure when using the water filter:*	
bar*	MPa*
2.8 to 6.2	0.28 to 0.62

If the pressure is higher than 6.2 bar:

▶ Fit a pressure reducer.
▶ Make the water connection. (see 16 Connecting the appliance to the water supply*)

8 Transporting the appliance

8.1 Transporting the appliance for initial use

Ensure that the following requirements are met:

- ❑ The appliance is packaged.
- ❑ The appliance is upright.

▶ Transport the appliance with the help of two people.
▶ Unpacking the appliance. (see 9 Unpacking the appliance)

8.2 Transporting the appliance after initial use

Observe the following instructions if you wish to transport or move the appliance again after initial use.

Ensure that the following requirements are met:

- ❑ The appliance is emptied.
- ❑ The appliance is upright.
- ❑ Door is secured against accidental opening.
- ❑ The pull-out trolley is secured against accidental opening.

▶ Transport the appliance with the help of two people.

9 Unpacking the appliance

Before you connect the appliance, report any damage immediately to the delivery company.

▶ Check the appliance and the packaging for damage during transport. Contact the supplier immediately if you suspect any level of damage.
▶ Remove all materials from the back or the side walls of the appliance that may prevent proper installation or ventilation.
▶ Remove all protective films from the appliance. Do not use sharp or pointed objects for this.

10 Setting up the appliance

CAUTION
Risk of injury due to heavy appliance!
▶ Have two people transport the appliance to its installation site.

WARNING
Danger of injury and damage due to the appliance being unstable!
The appliance can topple over.
▶ Secure the appliance as described in the instructions.

WARNING
Fire hazard and danger of damage!
▶ Do not place appliances emitting heat e.g. microwaves, toasters etc. on the appliance!

If possible, have the appliance installed in the kitchen unit by a professional.

Do not install the appliance on your own.

10.1 After installation

▶ Remove all transport safety components.

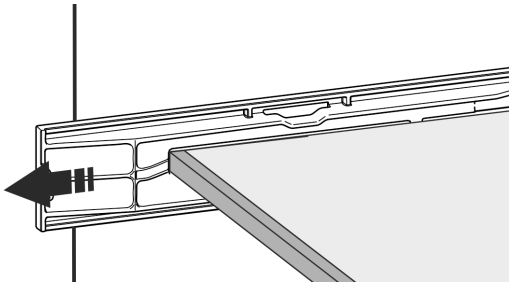

*Fig. 6 **

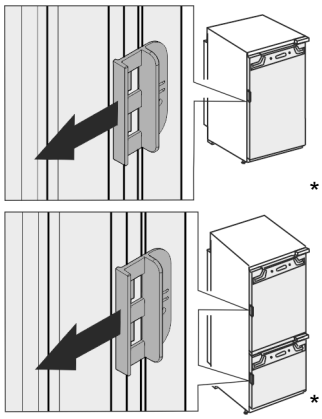

*

▶ Pull off the transport lock on the appliance door.

*

▶ Clean the appliance (see User Guide, Cleaning the appliance).

11 Installing multiple appliances

The appliances have been developed for different installation methods. If you wish to install several appliances next to each other or on top of each other, ensure that the following requirements are met:

- ❑ Only install appliances next to or on top of each other if they have been developed for this.
- ❑ Observe notices and the following table.

NOTICE
Risk of damage due to condensate!
▶ Do not place the appliance directly next to another cooling/refrigeration unit.

NOTICE
Risk of damage due to condensation!
▶ Do not place the appliance directly on top of another cooling/refrigeration unit.

Model	Installation method
All models	Standalone
Models with a model designation starting with **S...**.	Side-by-Side (SBS)
Models up to a maximum niche height of 880 mm and with a heated ceiling can be installed “on top of each other”. Top appliance: up to a maximum niche height of 140 mm	On top of each other

Models and their installation method

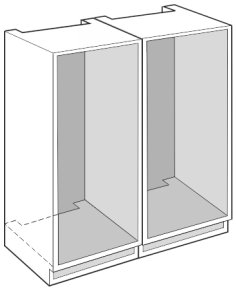

Fig. 7

Install each appliance into a separate unit niche.

12 Disposing of packaging

WARNING

Danger of suffocation due to packing material and plastic film!

▶ Do not allow children to play with packing material.

The packaging is made of recyclable materials:

- corrugated board/cardboard
- expanded polystyrene parts
- polythene bags and sheets
- polypropylene straps
- nailed wooden frame with polyethylene panel*

▶ Take the packaging material to an official collecting point.

13 Explanation of symbols used

	There is a danger of injury during this step! Observe the safety instructions!
	The instruction is valid for several models. Only perform this step if it applies to your appliance.
	For installation, please refer to the detailed description in the text section of the instructions.
	Section is valid for either a single-door appliance or a double-door appliance.
	Choose between the following options: Appliance with door hinge on the right or appliance with door hinge on the left.
	Installation step required for IceMaker and/or InfinitySpring.
	Only loosen or lightly tighten the screws.
	firmly tighten the screws.
	Check whether the following step is necessary for your model.
	Check that the components used are correctly installed/fitted.
	Measure the specified dimension and correct if necessary.
	Tool for installation: Metre stick
TORX® 20	Tool for installation: Cordless screwdriver and use A lengthwise bit insert is recommended for good access to the screws.
	Tool for installation: Spirit level
SW7 SW10	Tool for installation: Open-end wrench with AF 7 and AF 10
	Two people are required for this step.
	The step takes place at the marked location on the appliance.
	Aid for installation: String
	Aid for installation: Protractor
	Aid for installation: Screwdriver

* Depending on model and options

	Aid for installation: Scissors
	Aid for installation: Marking pen, wipeable
	Included: Remove components
	Dispose of components that are no longer required in accordance with local regulations.

14 **** freezer compartment door*

It is very easy to reposition the hinge of the **** freezer compartment door if the main door hinge is swapped. If the main door of the appliance can be opened to more than 115° (1), you can open the freezer compartment without repositioning the hinge. If the opening angle (2) of the appliance door is less than this, the hinge must be repositioned.

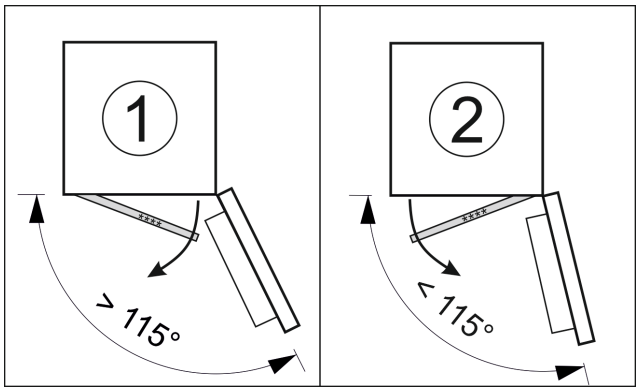

Fig. 8

14.1 Moving the door hinge

The slider for moving the door hinge is located on the back of the **** freezer compartment door at the bottom.

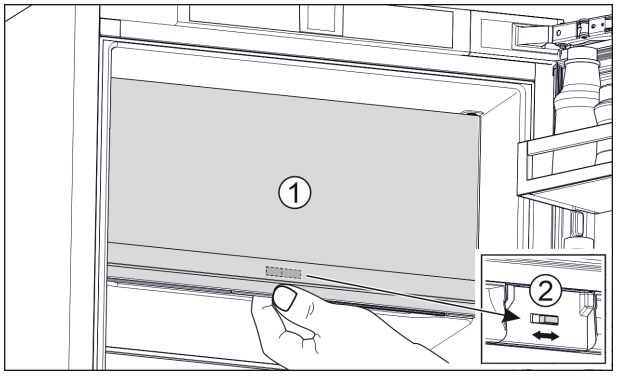

Fig. 9

▶ Close the **** freezer compartment door (1).
▶ Grab the **** freezer compartment door from below.
▶ Move the slider (2) either to the right or to the left.

15 Reversing the door

Tool

Fig. 10

NOTICE
Live parts!
Damage to electrical components.
▶ Remove the mains plug before you reverse the door.

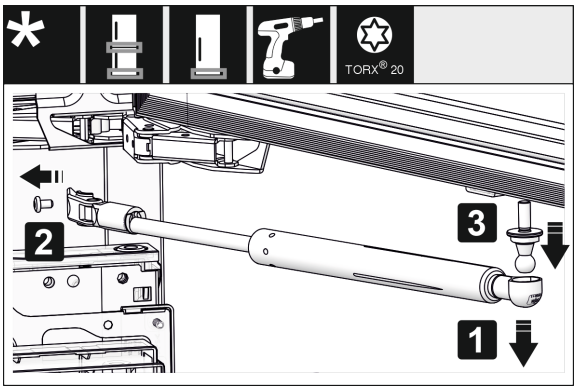

*Fig. 11 **

▶ Removing the soft stop damper: Remove the soft stop damper from the ball stud (1). Unscrew the retainer (2). Remove the ball stud with a screwdriver (3).*

Note
If the closing damper is only slightly above the floor, you can only remove the ball pins when the door is removed.*

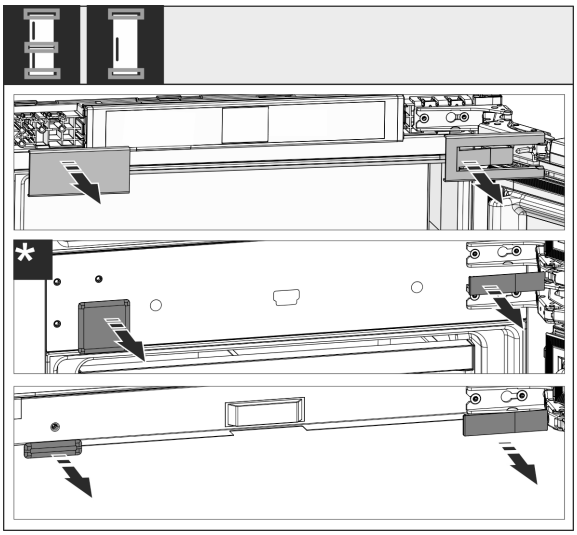

Fig. 12

▶ Remove covers.

Note
When removing the covers, ensure that the surface does not get scratched.

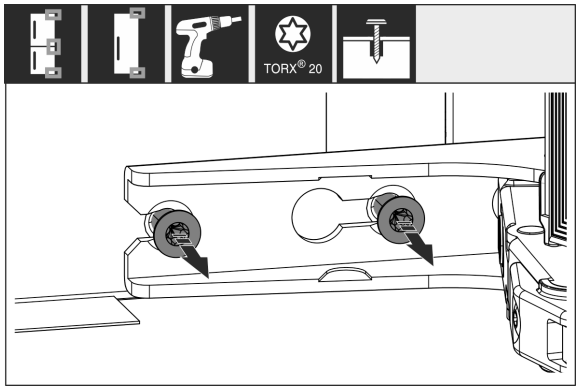

Fig. 13

▶ Loosen the screws on **all** hinges but do not remove them.

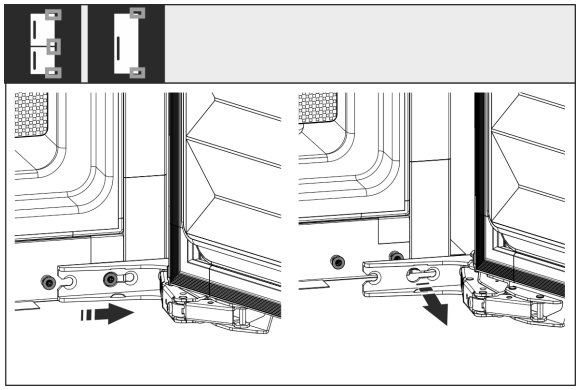

Fig. 14

▶ Removing the door: Push the door forward and then out, unhang it and put it to one side.

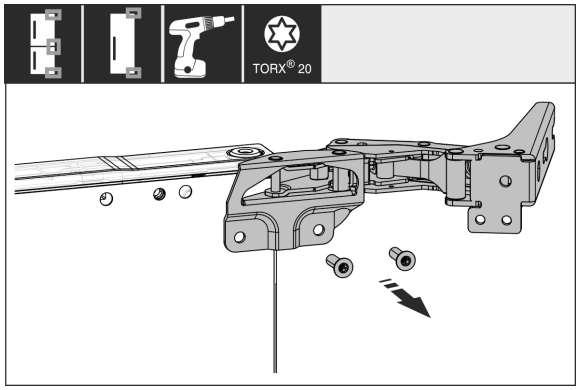

Fig. 15

▶ Unscrew all hinges and set aside together with the screws.

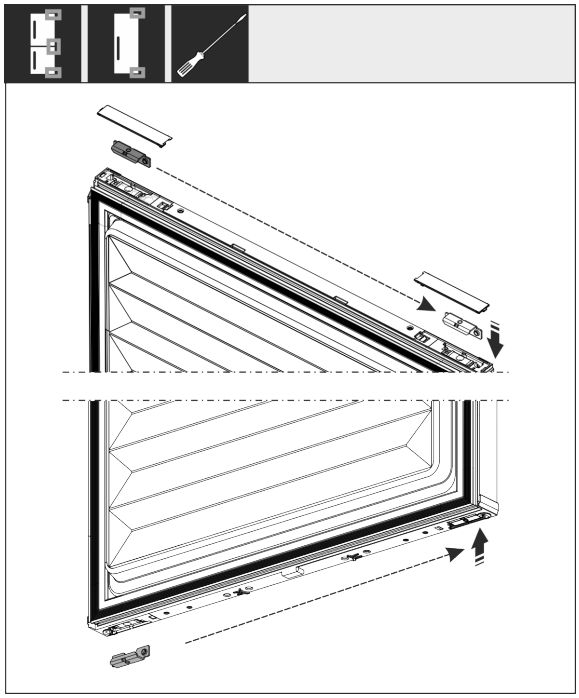

Fig. 16

▶ Loosen and shift the bracket at the top and bottom of the door. The bracket must be shifted so you can screw on the hinges.

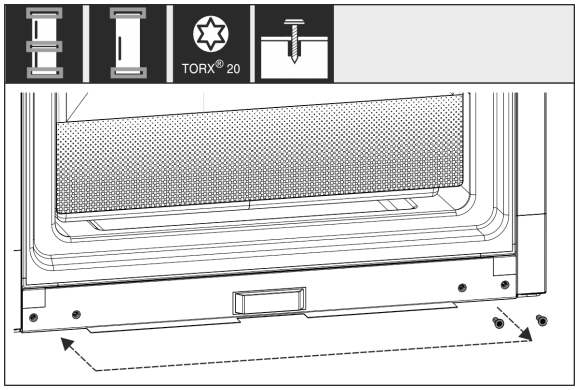

Fig. 17

▶ Shift the screws to fasten the hinge. Do not screw tightly after shifting – you need to hang the hinges later.

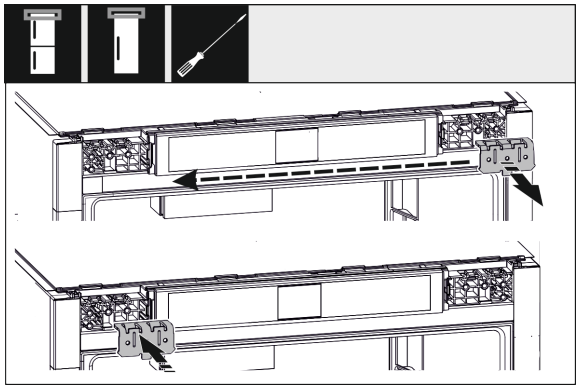

Fig. 18

▶ Move the fixing bracket to the opposite side.

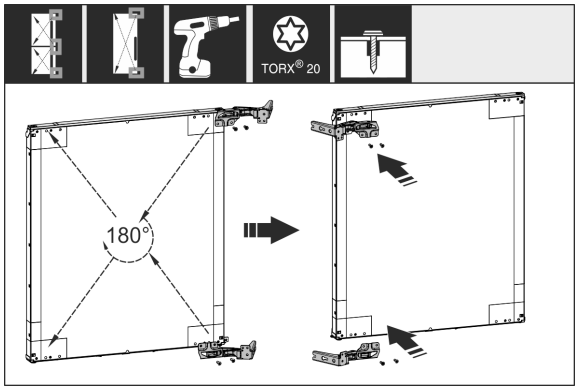

Fig. 19

▶ Turn all hinges 180° to the opposite side and screw firmly.

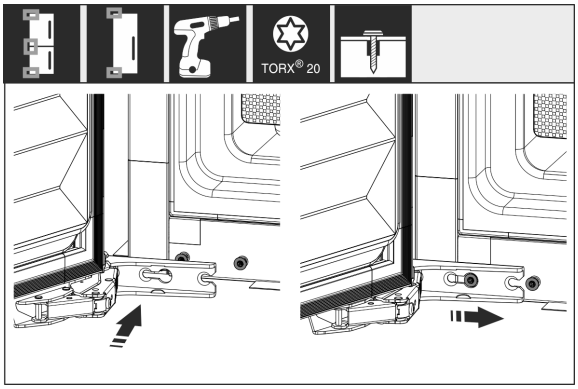

Fig. 20

▶ Refitting the door: Hang the door with its hinges and tighten the screws.

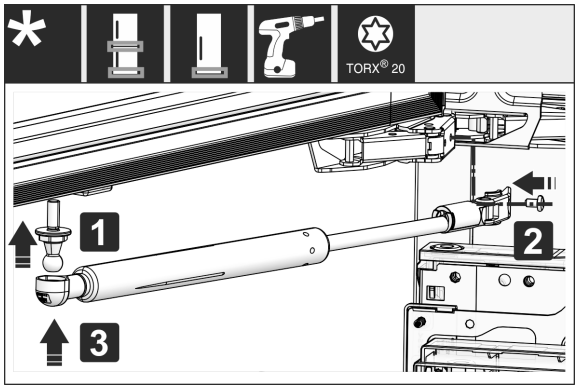

*Fig. 21 **

▶ Refitting the closing dampers: Screw in the ball studs (1), tighten the bracket (2) and hang the closing dampers in the ball studs.*

▶ Check all screws and retighten if necessary.

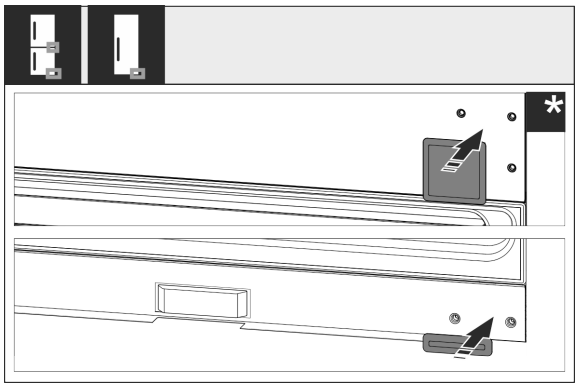

Fig. 22

▶ Reassemble the bottom and centre cover. Only replace the remaining covers after installing the appliance back into the cabinet.

16 Connecting the appliance to the water supply*

Make sure that the following requirements are fulfilled:

- ❑ The dimensions for the water supply connection are known and complied with. (see 7.1 Dimensions for the water connection)
- ❑ The correct water pressure is maintained. (see 7.1 Dimensions for the water connection)
- ❑ Water is supplied to the appliance via a cold water pipe which can withstand the operating pressure and is connected to the drinking water supply.
- ❑ All equipment and devices used to supply water must comply with the regulations in force in the respective country.
- ❑ The rear of appliance is accessible so that you can connect the appliance to the drinking water supply.
- ❑ The supplied hose is used. Old hoses have been disposed of.
- ❑ The hose connector contains a filter with a seal.
- ❑ There is a tap between the hose line and the domestic water connection so that you can turn off the water supply if necessary.
- ❑ The tap is not directly behind the appliance and is easily accessible. This way, you can push the appliance as far as possible into the cabinet recess and can quickly turn off the tap if necessary.

WARNING

Risk of electric shock from water!

▶ Before connecting to the water pipe: Disconnect the appliance from the mains.

▶ Before connecting to water supply lines: Shut off the water supply.

▶ Make sure that only qualified personnel connect the device to the drinking water supply.

WARNING

Risk of poisoning due to contaminated water!

▶ Only connect to the drinking water supply.

16.1 Connecting the hose

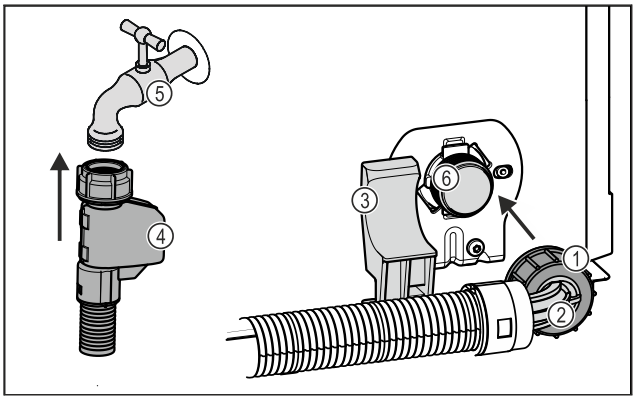

Fig. 23

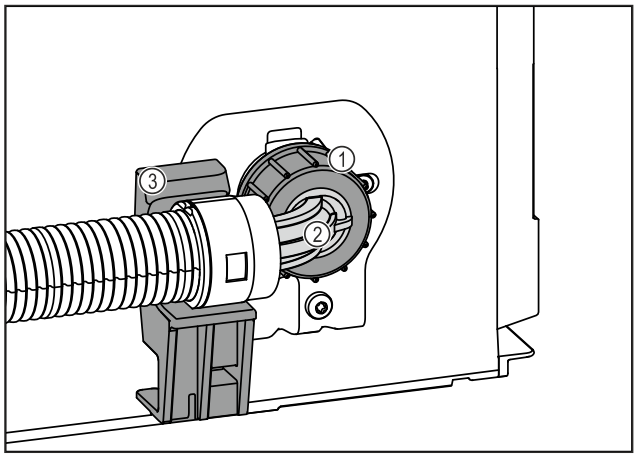

Fig. 23

(1) Nut
(2) Angled hose end
(3) Bracket
(4) Straight hose end
(5) Tap
(6) Solenoid valve: The solenoid valve is at the bottom on the back of the appliance. It has an R3/4 connecting thread.

NOTICE
Risk of damage from incorrect installation!
▶ Do not damage or kink the hose.
▶ Do not damage or kink the hose during installation in the cabinet recess.

Connecting the hose to the appliance:
▶ Position and hold the angled hose end *Fig. 23 (2)* horizontally on the bracket *Fig. 23 (3)*.
▶ Screw on the nut *Fig. 23 (1)* on by hand until it is firmly in place.
▷ The hose is connected to the appliance.

Connecting the hose to the tap:
▶ Connect the straight hose end *Fig. 23 (4)* to the tap *Fig. 23 (5)*.
▷ The hose is connected to the tap.

16.2 Checking the water system

Before you completely install the appliance in the cabinet recess, Liebherr recommends checking the water system for leaks.
▶ Put in the InfinitySpring water tank. (see 19 Water tank*) *
▶ Put in the InfinitySpring water filter. (see 20 Water filter*) *
▶ Slowly turn on the tap.
▶ Check the hose, water feed and connections for leaks.
▷ The water system has now been checked for leaks.
▷ The water system is not leaking: You can install the appliance completely in the cabinet recess.

Note
InfinitySpring: Before the first use, you must put the InfinitySpring into operation. To do this you must bleed and clean the water system. (see Quick Start Guide or operating instructions)*

IceMaker: Before the first use, you must clean the IceMaker. (see Quick Start Guide or operating instructions)*

17 Installing the appliance in the recess

Tool

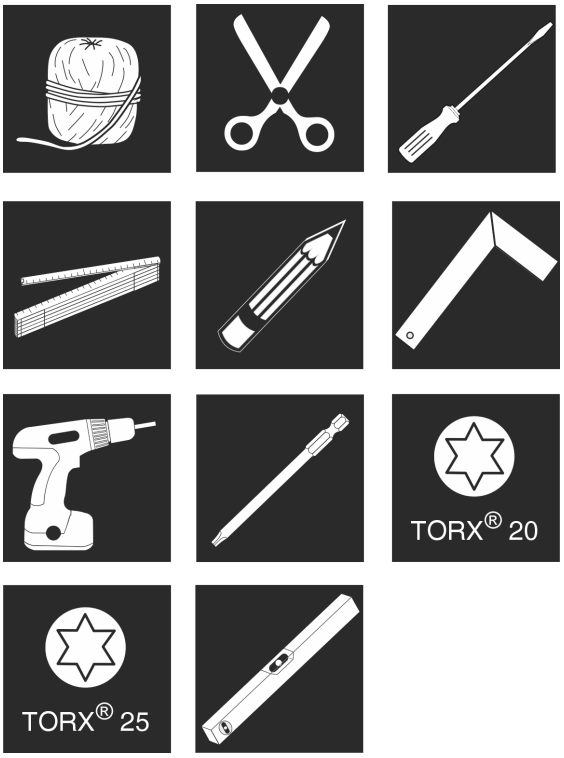

Fig. 24

Supplied assembly parts

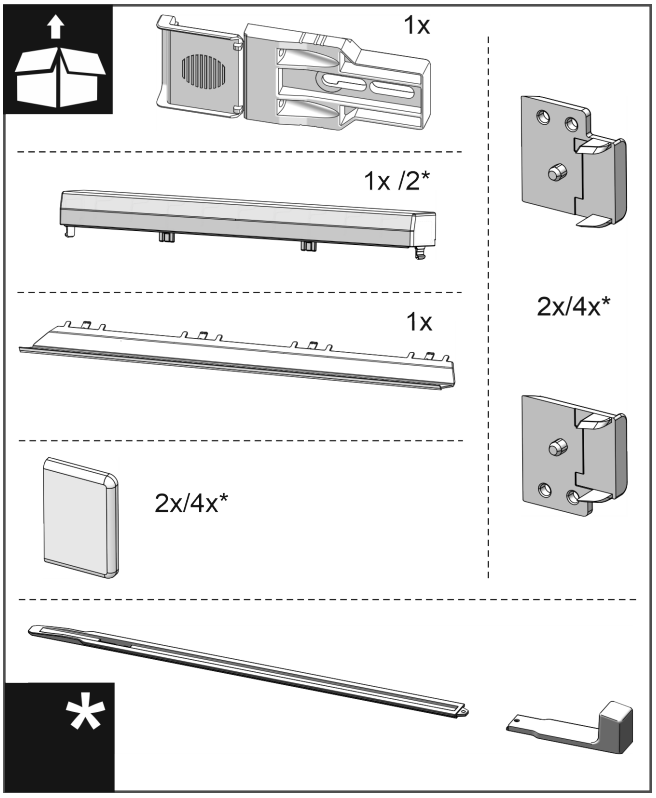

Fig. 25

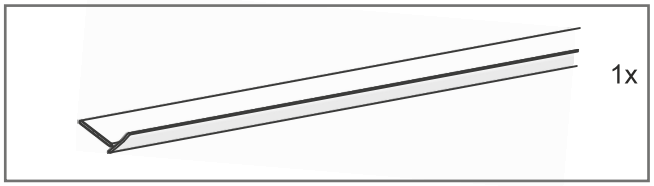

Fig. 26

*** Depending on model and options**

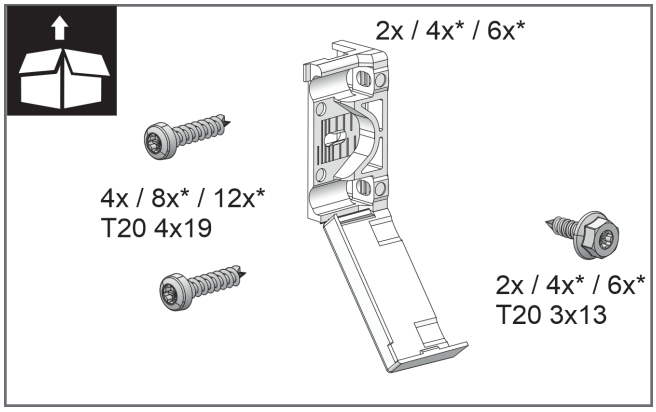

Fig. 27

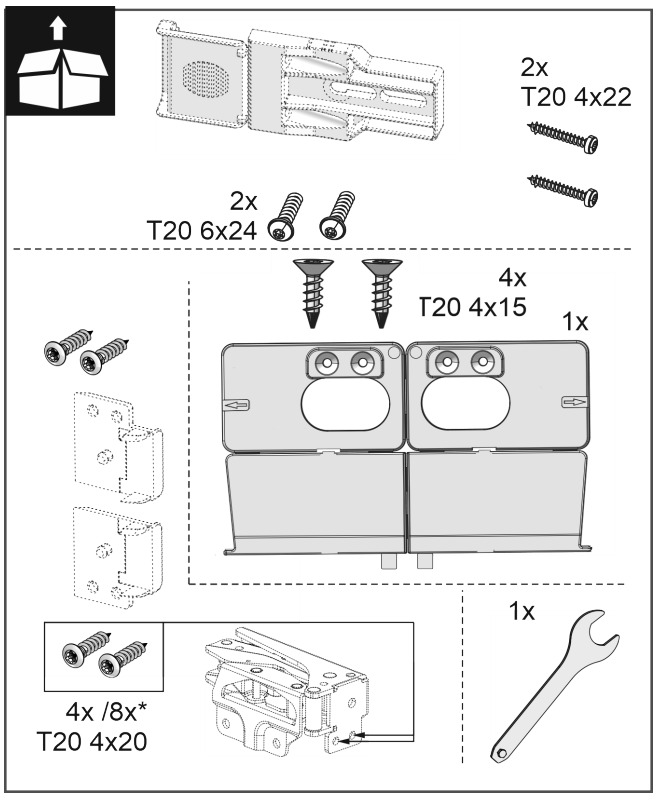

Fig. 28

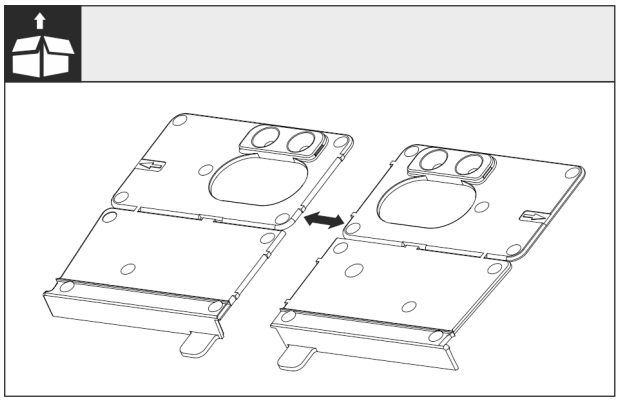

Fig. 29

▶ Disconnect the base installation bracket at the perforation.

NOTICE

Correct installation depth of the appliance.

▶ Using the mounting bracket ensures the correct installation depth of the appliance.

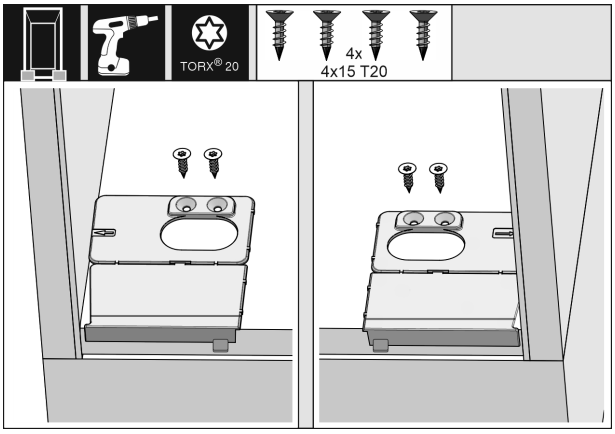

Fig. 30

▶ Screw the mounting brackets on the left and right of the recess floor, flush to the side wall.

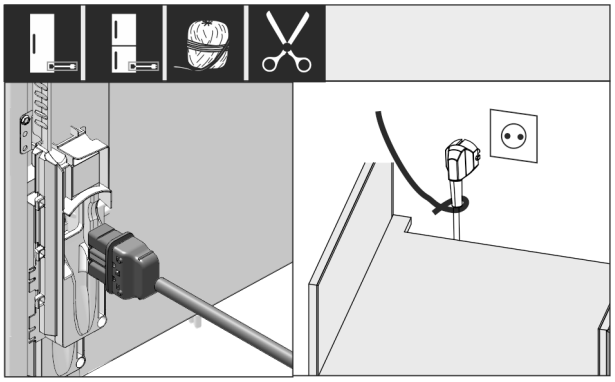

Fig. 31

▶ Remove the mains cable from the package.

▶ Plug the mains cable's IEC socket completely into the appliance plug on the back of the appliance. Ensure that the IEC socket is tight.

▶ Use a cord to lay the mains plug to a freely accessible socket.

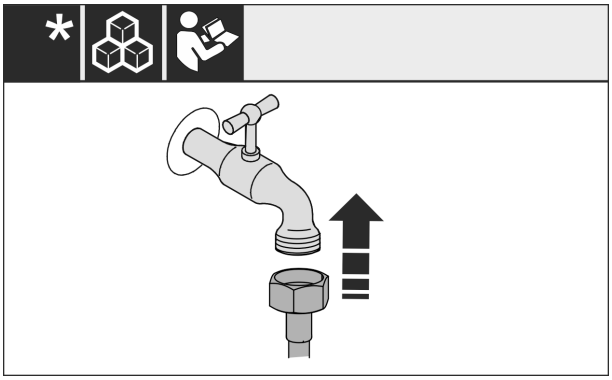

*Fig. 32 **

▶ If necessary, install the water connection at this point, following the instructions in the User Guide.*

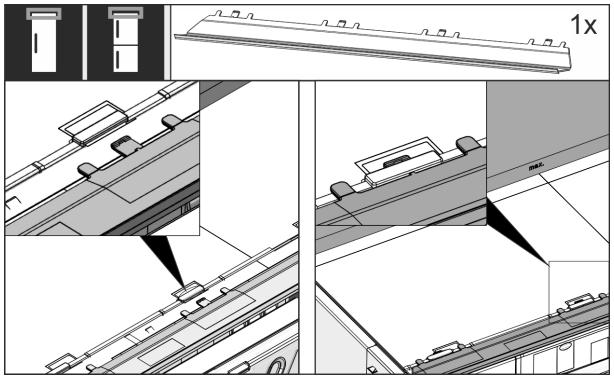

Fig. 33

▶ Insert the adapter panel on the top of the appliance. The panel can be moved to both sides.

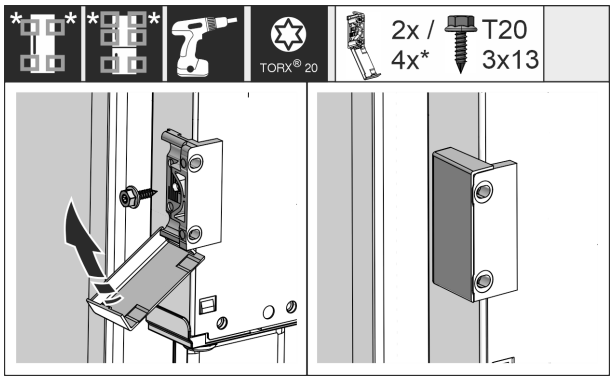

Fig. 34

▶ Fit the mounting bracket. Attach the mounting bracket at the height of the custom door panel handle. For a large door, use four mounting brackets.

▶ After assembly, fold the covers onto the bracket.

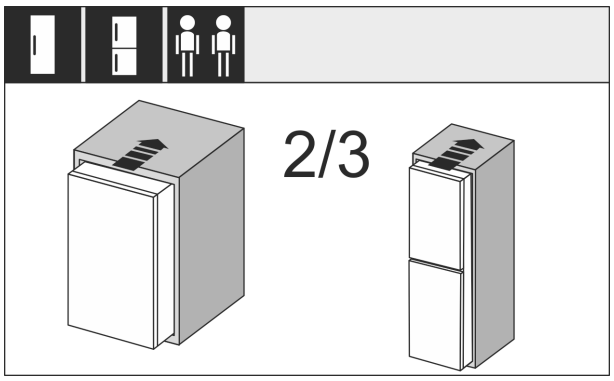

Fig. 35

▶ Insert the appliance 2/3 of the way into the recess.

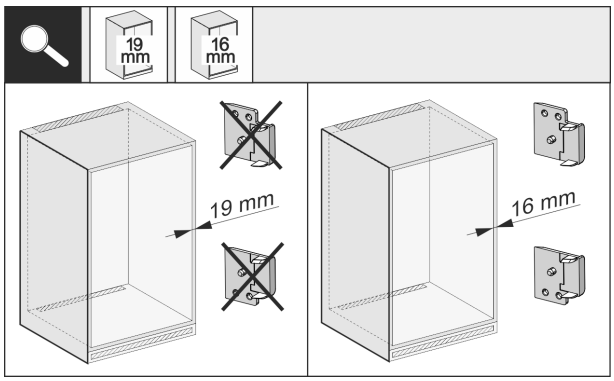

Fig. 36

▶ Check whether the unit side wall is 16 mm or 19 mm thick.

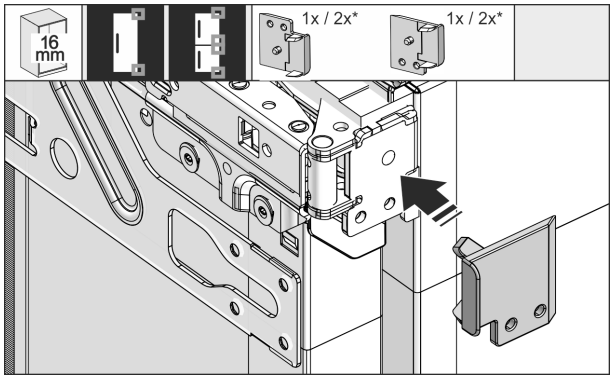

Fig. 37

▶ 16 mm thick unit side walls: Put a spacer on all hinges.

▶ 19 mm thick unit side walls: You do not need a spacer.

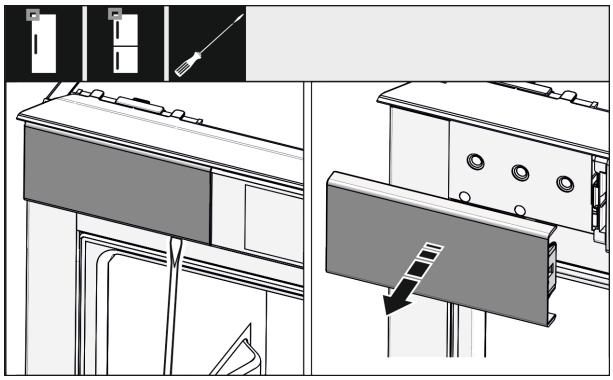

Fig. 38

▶ Use a screwdriver to loosen the cover at the top left and remove it.

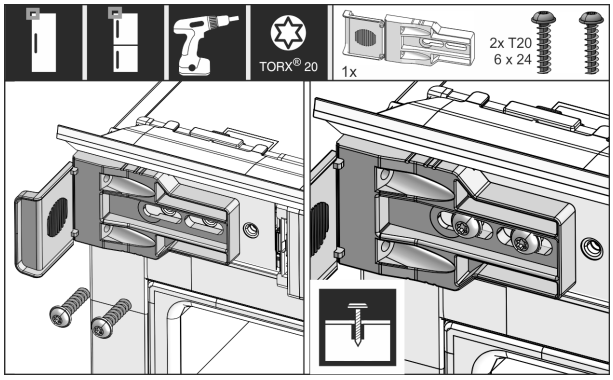

Fig. 39

▶ Loosely tighten the mounting bracket screw. The bracket should still be easy to move.

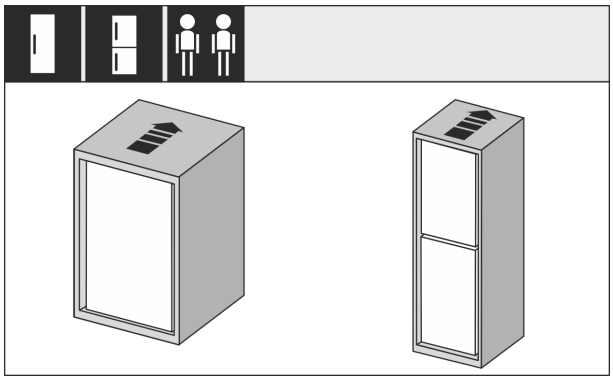

Fig. 40

*** Depending on model and options**

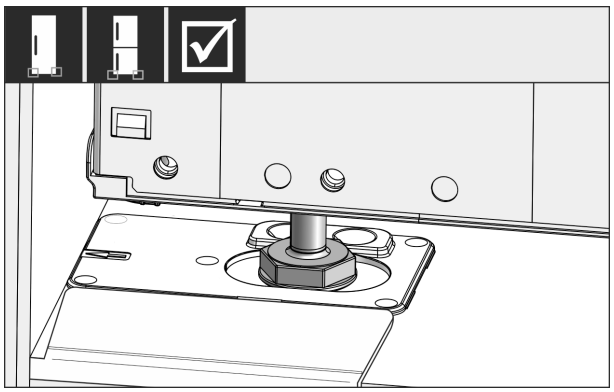

Fig. 41

WARNING

Risk of fire due to short circuit!

- ▶ When you push the appliance into the niche: do not kink, jam or damage the mains cable.
- ▶ The appliance must not be operated with a defective mains cable.

- ▶ Push the appliance all the way into the unit recess. The adjustable feet must rest in the recesses in the brackets on both sides.

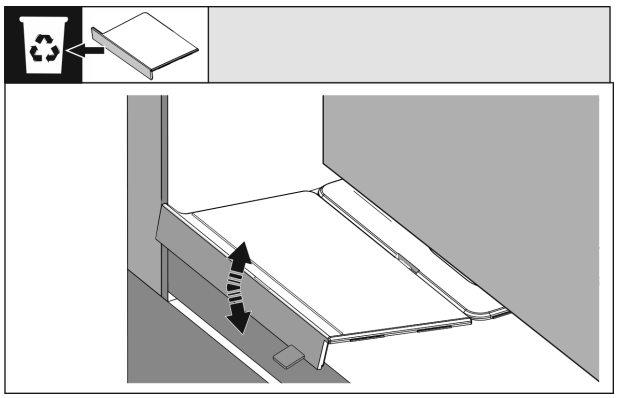

Fig. 42

- ▶ Remove the floor mounting bracket stopper. Loosen the stopper by moving it and, if necessary, pull it off using pliers.

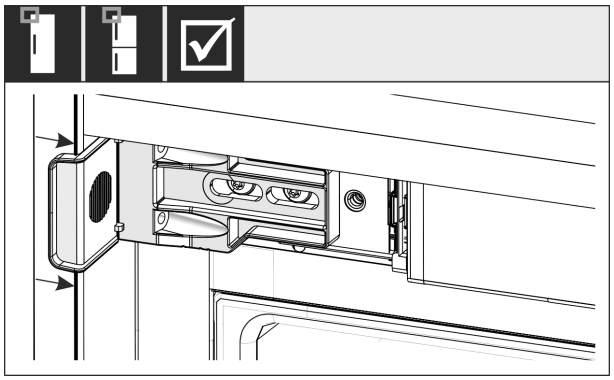

Fig. 43

- ▶ Check that the appliance is flush in the cabinet recess. The mounting bracket must be attached to the side wall of the cabinet recess.

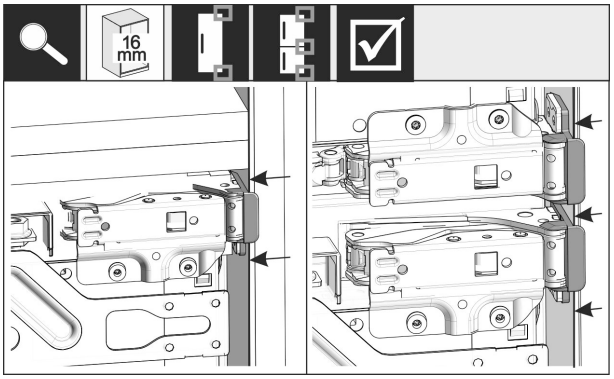

Fig. 44

Note

With 16 mm unit side walls, the spacers fit against the unit recess on the hinge side.

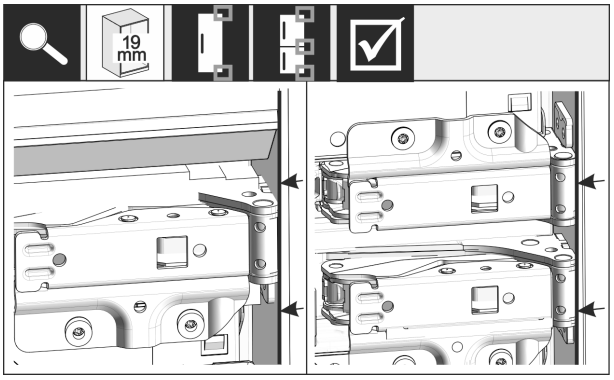

Fig. 45

- ▶ 19 mm thick unit side walls: Align the front of the hinges flush with the unit side wall.

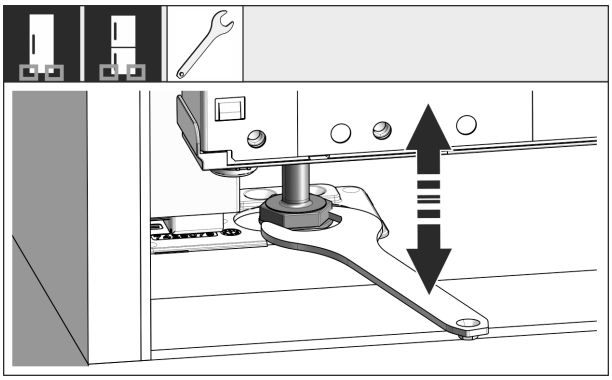

Fig. 46

- ▶ If necessary, use the adjustable feet to correct the tilt of the appliance.

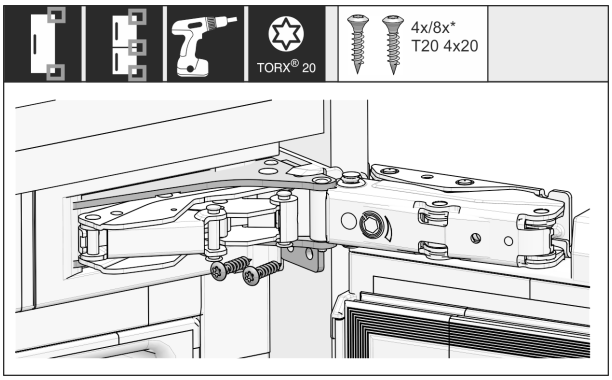

Fig. 47

- ▶ Screw on the appliance on the hinge side.

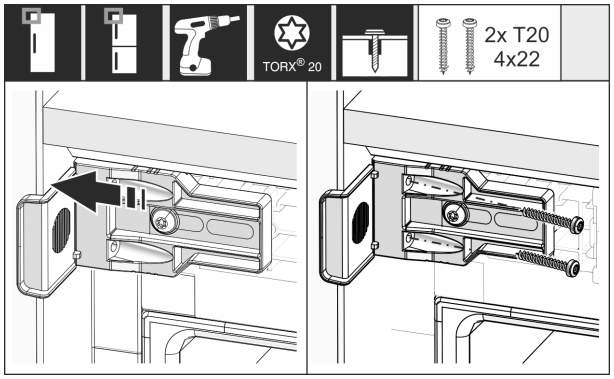

Fig. 48

▶ Move the bracket so it sits flush on the side wall of the cabinet recess.

▶ Tighten all the screws securely.

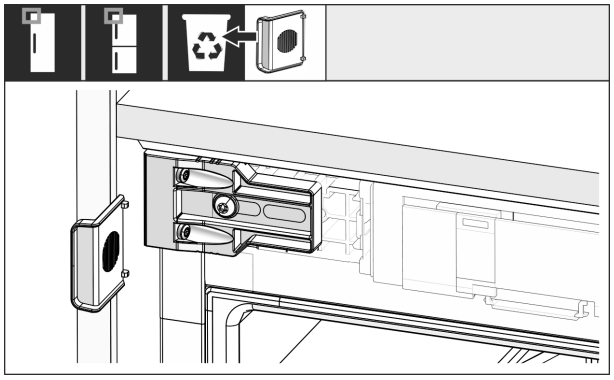

Fig. 49

▶ Remove the stop from the bracket on the handle side and dispose of it.

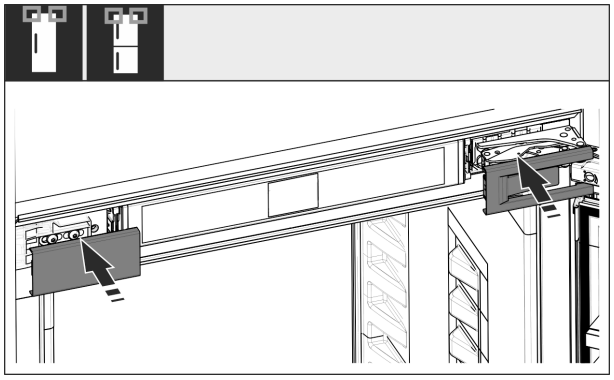

Fig. 50

▶ Put covers into position.

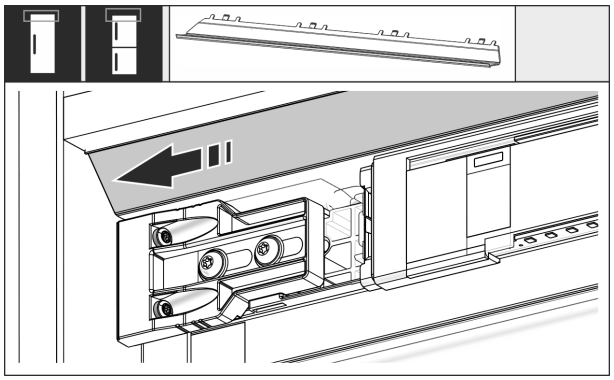

Fig. 51

▶ Slide the panel so that it sits flush with the side of the cabinet wall.

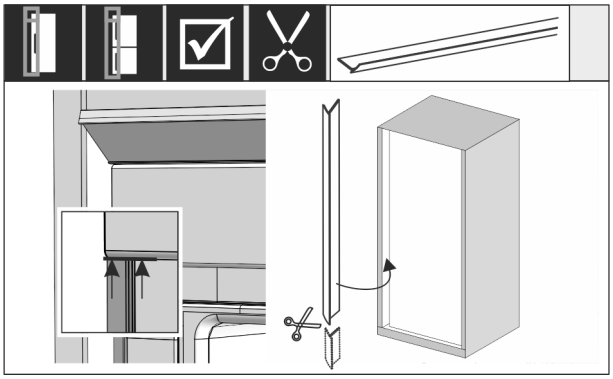

Fig. 52

▶ If necessary: Shorten the sealing strip as necessary with a sharp pair of scissors.

▶ Position the sealing strip below the top cover and press it in. The sealing strip is magnetic.

From a niche height of 1400 mm, install levelling rails:

Fig. 53

You must installed levelling rails under the appliance from a niche height of 1400 mm. The levelling rails **reduce the noise level**. Two levelling rails and an installation handle are enclosed as standard from a niche height of 1400 mm.

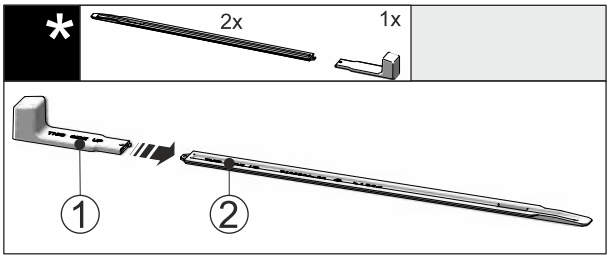

Fig. 54

▶ Attach the installation handle *Fig. 54 (1)* to the levelling rail *Fig. 54 (2)*.

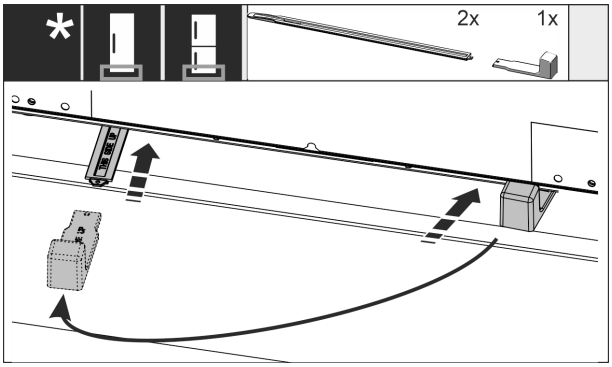

Fig. 55

▶ Push the levelling rail into the guide under the appliance base until it reaches the stop.

▶ Remove the installation handle and attach it to the second levelling rail.

*** Depending on model and options**

▶ Proceed in the same way for the second levelling rail.

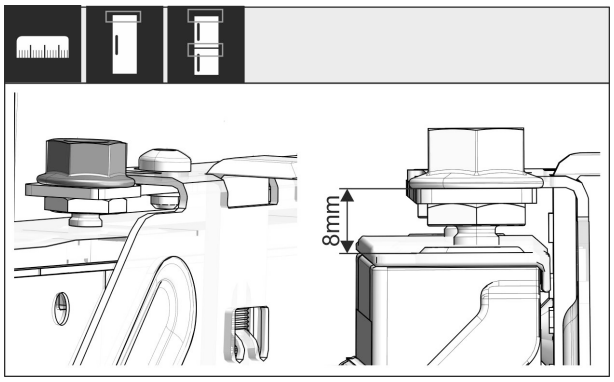

Fig. 56

▶ Close the door.

▶ Check the preset of 8 mm from the upper edge of the appliance door to the crosspiece support.

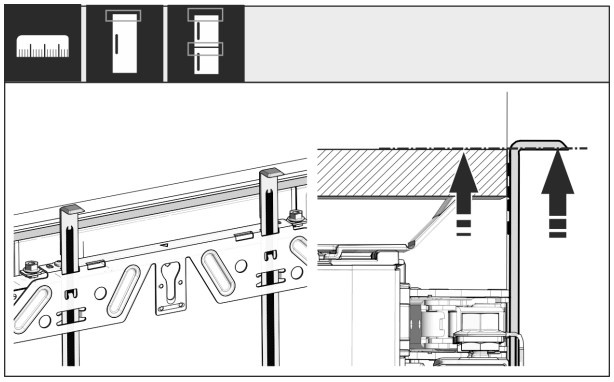

Fig. 57

▶ Push the assembly aids to the unit door height. Lower stop edge of the assembly aid = upper edge of the door to be assembled.

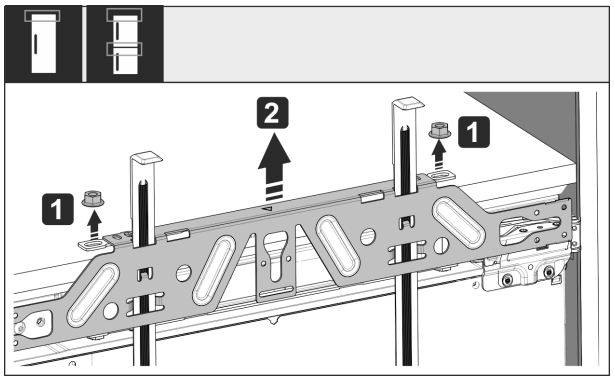

Fig. 58

▶ Loosen locknuts *Fig. 58 (1)*.

▶ Remove crosspiece *Fig. 58 (2)*.

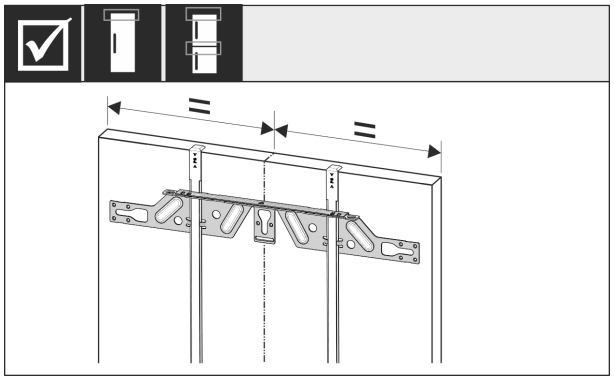

Fig. 59

▶ Hang the crosspiece on the inside of the unit door and make sure it is central.

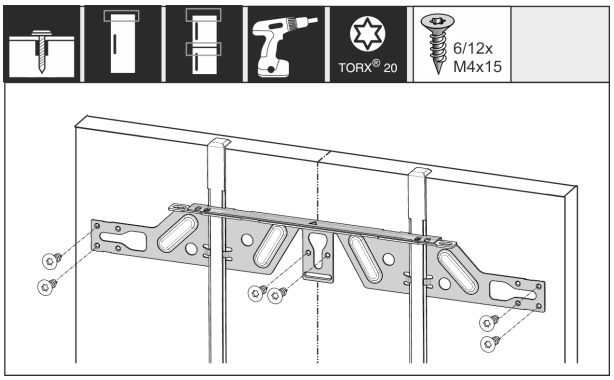

Fig. 60

▶ Fix the crosspiece using at least 6 screws for chipboard doors and at least 4 screws for panel doors.

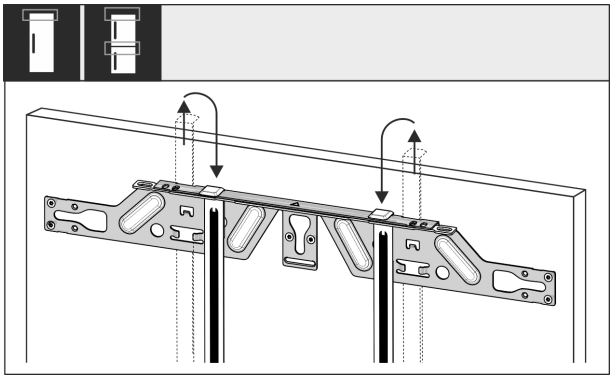

Fig. 61

▶ Remove the fitting aids, turn round and insert into the adjacent opening.

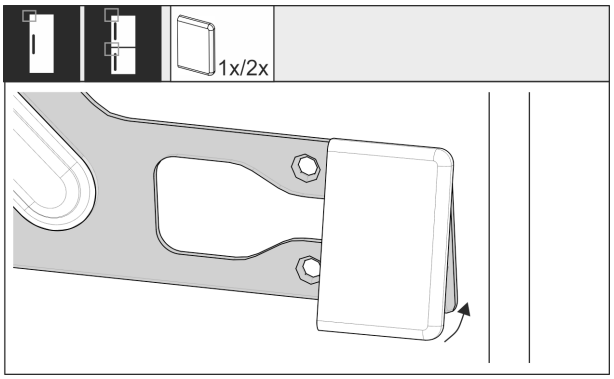

Fig. 62

▶ Put the cover on the crosspiece on the handle side.

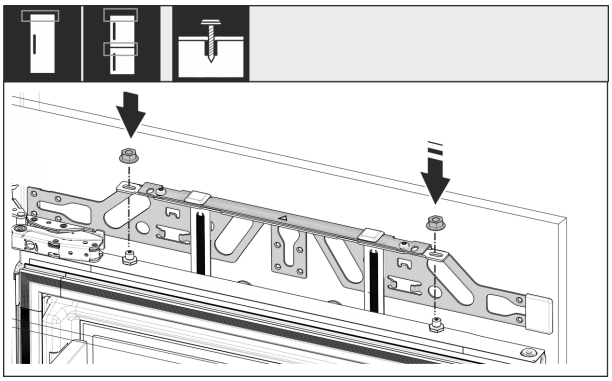

Fig. 63

▶ Attach the custom panel and loosely screw the lock nuts onto the adjusting bolts.

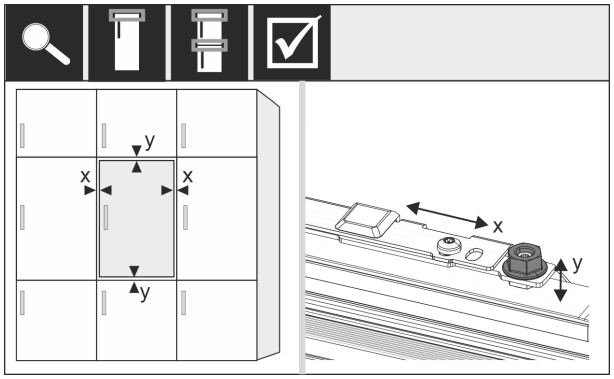

Fig. 64

▶ Align the custom panel in the X and Y direction using the adjusting bolts.

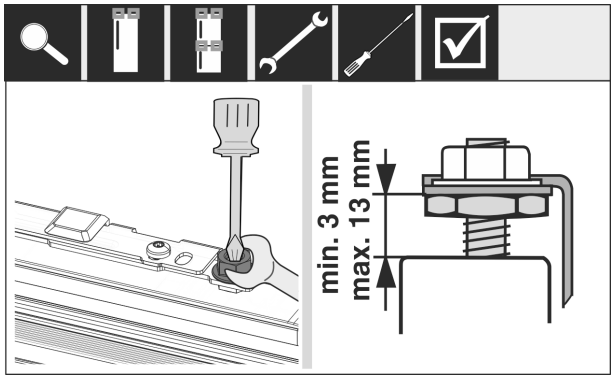

Fig. 65

▶ Tighten the lock nuts.

▶ Check the adjusted height.

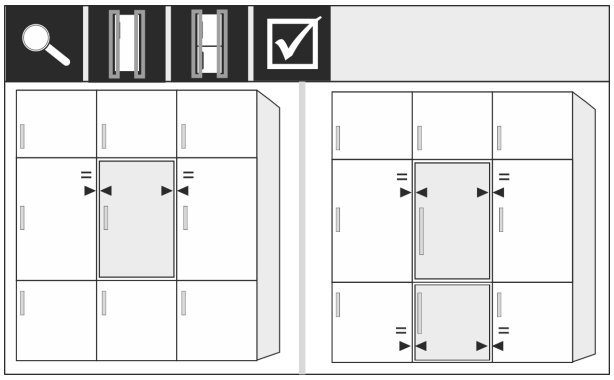

Fig. 66

For front panels thicker than 19 mm:

▶ Check the dimensions, weights and information in the following sections: (see 6 Custom panel weights) (see 18 Cabinet fronts)

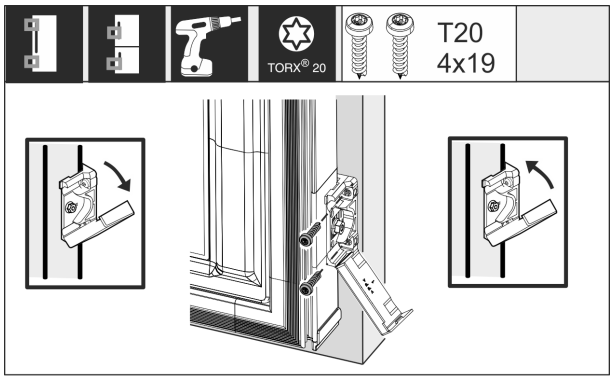

Fig. 67

Mounting the fastening bracket on the custom panel:

▶ Open the cover.

Mounting the fastening bracket on the custom panel:

▶ Align the front edge of the mounting bracket parallel with the custom door panel edge and screw the bracket down tightly.

Mounting the fastening bracket on the custom panel:

▶ Fold up the cover.

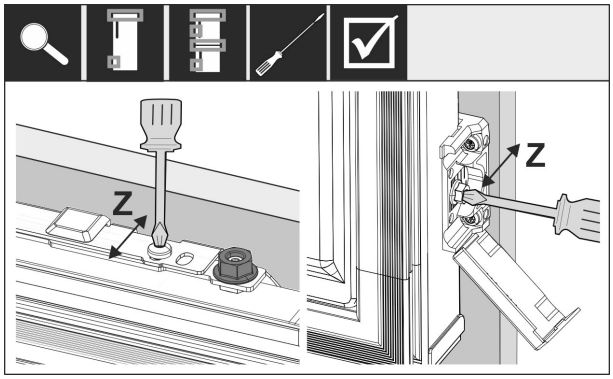

Fig. 68

Align the custom panel in the Z direction:

▶ Loosen the adjusting screw on the crosspiece and the screw on the mounting bracket.

▶ Move the door.

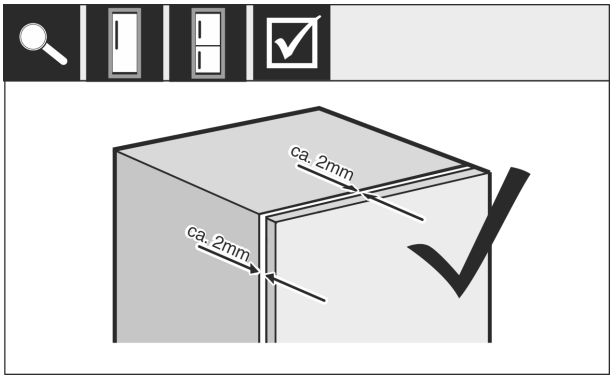

Fig. 69

▶ Check the gap between the custom panel and the unit body.

▶ Check all the screws and tighten them if necessary.

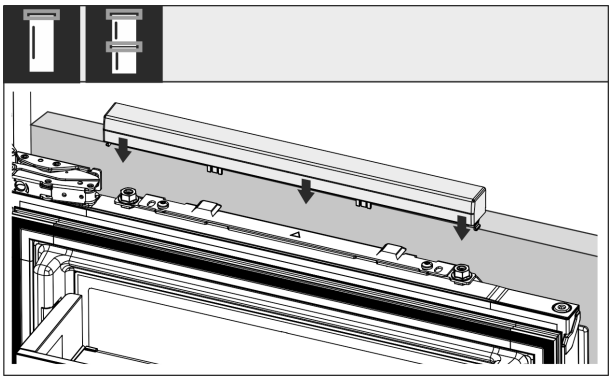

Fig. 70

▶ Put on the top cover.

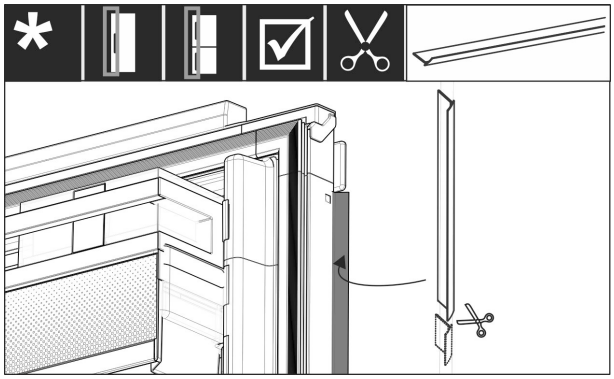

Fig. 71

▶ Cut the sealing strip to the required length.
▶ Insert the sealing strip between the front panel and the appliance door.

To make sure the appliance is correctly installed and there will not be any icing up, condensation or malfunctions, the following criteria apply:

- The door must close properly.
- The custom door panel must not touch the body of the unit.
- The seal on the upper corner on the handle side must be fitted securely.

▶ Check recess installation according to the criteria above.

18 Cabinet fronts

18.1 Dimensions

Depending on your model, you will need one or two cabinet doors. The size of the cabinet door(s) depends on the overall recess size and cabinet unit thickness.

Note
Observe the corresponding appliance and niche dimensions and installation sketches .

General requirements:

- Please note our appliance-specific recommendations on size and weight for fixed door installation (see 6 Custom panel weights) .
- The body of the unit should be at least 16 mm thick but not more than 19 mm.
- When mounting a 2-door cabinet door, observe the recommended clearances.*

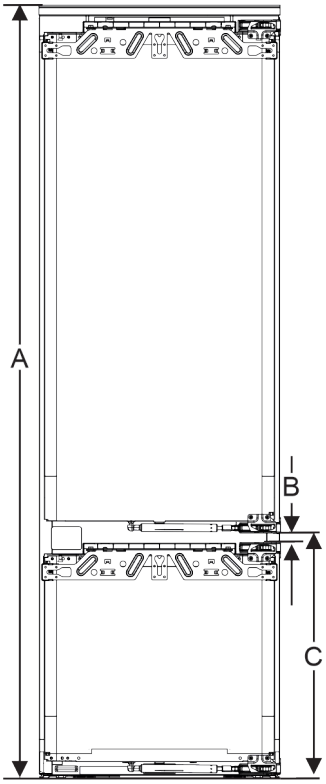

*Fig. 72 Clearances for a 2-door cabinet door**

Recess height 178-2 drawers*	
Appliance height (A) (mm)	1770
Distance (B) (mm)	15
Clearance (C) door-on-door (mm)	549 + 15

Recess height 178-3 drawers*	
Appliance height (A) (mm)	1770
Distance (B) (mm)	15
Clearance (C) door-on-door (mm)	695 + 15

Other cabinet door above, below or next to it:

- The vertical gap between custom panels must be 4 mm.
- The horizontal gap between custom panels must be 4 mm. Check the risk of them clashing here. (see 18.3 Setting the clearance to avoid collision)

Weight and hinges:

- With heavy furniture fronts, the stress on the hinge is very high. The hinge may be damaged. Please note the maximum weight specification for your appliance in the chapter Furniture front weights (see 6 Custom panel weights) .
- If the cabinet front exceeds the maximum permitted weight, an appliance with door-tracking device can help by loading the weight over several concealed hinges on the cabinet.
- If you use long unit fronts that protrude far above the appliances, we recommend an additional door hinge (e.g. Kamat), which must have the same pivot point as the fixed door hinge used with your appliance. By using another hinge (Kamat), the weight is shared over several points. The use of a milled compensating fastening is recommended for high unit fronts to counteract warping (convex/concave).

18.2 Mounting the cabinet front(s)

When installing, note:

- Cabinet front must be installed symmetrically to the refrigerator door.
- Adjoining cabinet front is exactly level.
- Adjoining cabinet front has the same edge radius as the front of the appliance.
- Cabinet front is flat and tension-free.
- The front panel has a minimum depth setting of approx. 2 mm to the body.

▶ Install the appliance in the recess. (see 17 Installing the appliance in the recess)
▶ Fasten the front panel to the appliance door. (see 17 Installing the appliance in the recess)
▶ Check that the front panel can close unobstructed. (see 18.3 Setting the clearance to avoid collision)

18.3 Setting the clearance to avoid collision

After installing the cabinet front(s), check that the cabinet fronts do not collide.

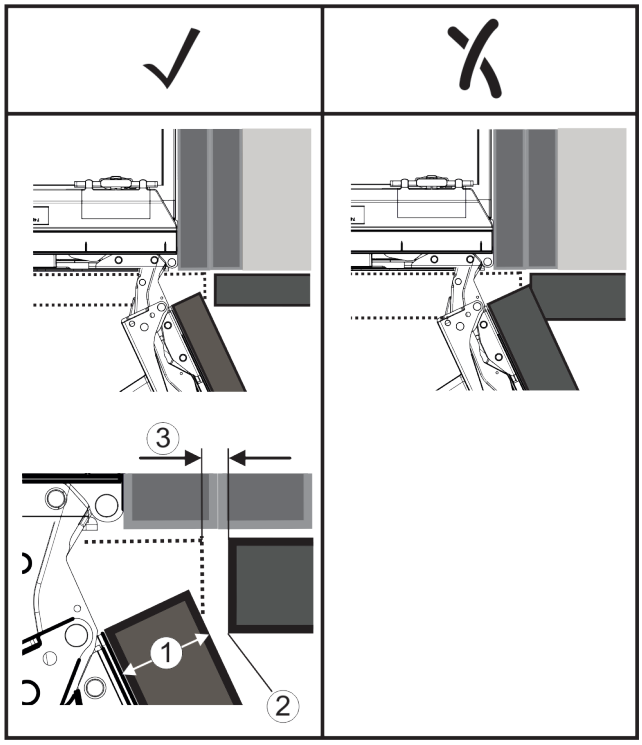

Fig. 73

(1) Front thickness (FD) **(3)** Clearance (S)
(2) Edge radius (R)

	R (2) = 0 mm		R = 1,2 mm		R = 2 mm		R = 3 mm	
FD(1) (mm)	Gmin	Gmax	Gmin	Gmax	Gmin	Gmax	Gmin	Gmax
16	0,3	0,9	0,1	0,4	0,1	0,2	0,1	0,2
19	0,7	2,4	0,3	1,9	0,23	3,25	0,1	0,8
20	2	4,3	1,5	3,6	1	3,1	0,6	2,7
22	3,5	6,3	3	5,6	2,6	5,3	2,1	4,6
24	5,5	8,3	5	7,8	4,5	7,4	4	6,9
26	7,6	10,7	7	10,3	6,6	9,9	6,2	9,4

Fig. 74 Table of clearance limits

G_{min} = min. clearance in mm

G_{max} = max. clearance in mm

Note
When making adjustments, always make sure that the cabinet front suits the general appearance.

Check the collision factors and adjust them accordingly:

▶ Determine the front thickness and edge radius.
▶ Refer to the table for the min./max. clearance dimensions.
▶ Check the clearance size against the table.
▶ Do one of the following depending on the measured clearance size.

Clearance	Description
$S > G_{max}$	If the clearance size is greater than the two limits, you do not need to make any adjustments.
$S < G_{min}$	If the clearance size is below the limits, you must increase it. Another option is to increase the edge radius.
$G_{min} \leq S \leq G_{max}$	If the clearance is between the two limits, you have to be careful. This will quickly lead to collisions.

19 Water tank*

The water tank of the InfinitySpring is located behind the bottom drawer in the fridge section or BioFresh compartment, depending on the device.*

19.1 Inserting the water tank

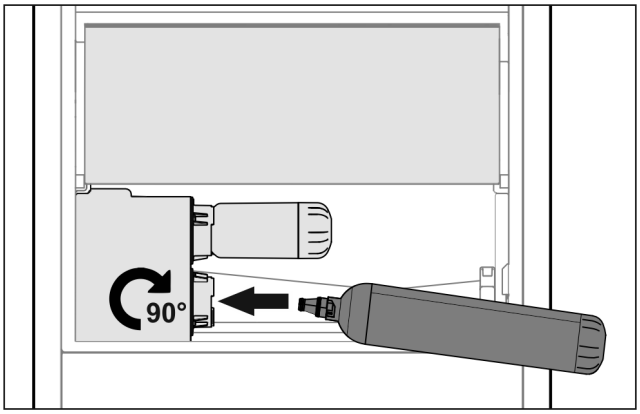

Fig. 75

▶ Remove the drawer compartment.
▶ Insert the water tank and rotate approx. 90° clockwise until it clicks in.
▶ Check that the tank is sealed and no water leaks out.
▶ Insert the drawer compartment.
▶ Bleed the water system. (see Quick Start Guide or operating instructions)

Instead of the water filter you can insert an additional water tank.*

Note
You can purchase this water tank as an optional extra.

20 Water filter*

Depending on your model, the water filter is behind the lowest drawer in the fridge or BioFresh compartment.*

It filters out deposits in the water and reduces the taste of chlorine.

❑ Replace the water filter at least every 6 months, or if there is a significant reduction in the flow rate.
❑ The water filter contains carbon and can be disposed of with the regular household waste.

Note
Water filters are available from the Liebherr-Hausgeräte store at home.liebherr.com/shop/de/deu/zubehor.html.

20.1 Inserting the water filter

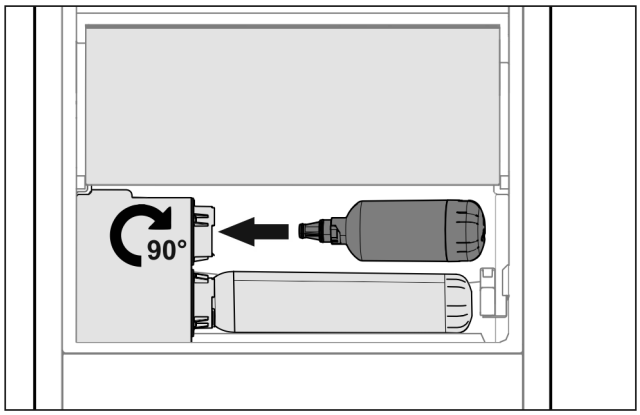

Fig. 76

▶ Remove the drawer compartment.
▶ Insert the water filter and rotate approx. 90° clockwise until it clicks in.
▶ Check that the filter is sealed and no water leaks out.
▶ Insert the drawer compartment.

Note
New water filters may contain suspended particles.*
▶ After replacing the filter: Draw and dispose of 3 l water at the InfinitySpring.

▷ The water filter is now ready for use.

21 Connecting the appliance to the power supply

WARNING
Danger of electric shock and injury due to damaged appliance or damaged mains cable!
Danger of cuts and fatal injuries. If the appliance or the mains cable is damaged during transport, you may be electrocuted. You could also cut yourself on damaged parts of the appliance housing.
▶ Check the appliance and the mains cable for damage after transport.
▶ Never put the appliance into operation if the appliance or the mains cable are damaged.
▶ Contact Customer Service.

You can connect your appliance to the mains using the power cable supplied separately. The mains power cable has an appliance coupler at one end and a mains plug at the other end.

Make sure that the following requirements are fulfilled:

- The appliance and power cable are undamaged.
- The appliance is installed in accordance with the regulations. (see 17 Installing the appliance in the recess)
- Requirements for the electrical connection are met.
- Dimensions for connection in accordance with regulations are known and observed.
- Mains voltage and frequency correspond to the specifications on the type plate.
- The socket is earthed according to the regulations and fused.
- The fuse tripping current is between 10 A and 16 A.
- The socket is easily accessible and is not behind the appliance. (see 4 Recess dimensions)

NOTICE
Danger of damage to incorrect operation!
Damage to the electrical components of the appliance.
▶ Only use the supplied mains cable.

WARNING
Danger of fire due to incorrect connection!
Burns.
Damage to the appliance.
▶ Do not use an extension cable.
▶ Do not use distributor blocks.

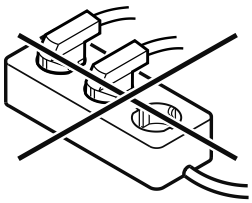

NOTICE
Danger of damage to incorrect connection!
Damage to the appliance.
▶ Do not connect the appliance to a stand-alone inverter, e.g. solar power systems and petrol generators.

▶ Connect the mains cable plug to the power supply. Ensure that the plug is tightly in the socket.
▷ The Liebherr logo appears in the display.
▷ The display switches to the standby symbol.
▷ If no action occurs within 60 seconds: The standby symbol fades or disappears.
▷ The appliance is connected. For information regarding first use, see the following section or the operating instructions.

home.liebherr.com/fridge-manuals

EN built-in fridges and freezers, fixed door

Issue date: 20251008

Part number index: 7088411-01

Liebherr-Hausgeräte GmbH
Memminger Straße 77-79
88416 Ochsenhausen
Deutschland

Installation Guide

Quality, Design and Innovation

home.liebherr.com/fridge-manuals

LIEBHERR

Contents

1 General safety instructions ... 2

2 Installation requirements ... 3
2.1 Installation site ... 3
2.2 Position in space ... 3

3 Appliance dimensions ... 3

4 Recess dimensions ... 5

5 Ventilation requirements ... 5

6 Custom panel weights ... 6

7 Water connection* ... 6
7.1 Dimensions for the water connection ... 6
7.2 Water pressure ... 6

8 Transporting the appliance ... 7
8.1 Transporting the appliance for initial use ... 7
8.2 Transporting the appliance after initial use ... 7

9 Unpacking the appliance ... 7

10 Setting up the appliance ... 7
10.1 After installation ... 7

11 Installing multiple appliances ... 7

12 Disposing of packaging ... 8

13 Explanation of symbols used ... 8

14 ** freezer compartment door* ... 9**
14.1 Moving the door hinge ... 9

15 Reversing the door ... 9

16 Connecting the appliance to the water supply*.. 11
16.1 Connecting the hose ... 11
16.2 Checking the water system ... 12

17 Installing the appliance in the recess ... 12

18 Cabinet fronts ... 19
18.1 Dimensions ... 19
18.2 Mounting the cabinet front(s) ... 20
18.3 Setting the clearance to avoid collision ... 20

19 Water tank* ... 20
19.1 Inserting the water tank ... 20

20 Water filter* ... 20
20.1 Inserting the water filter ... 21

21 Connecting the appliance to the power supply 21

The manufacturer is continually working on the further development of all types and models. Please be aware that we reserve the right to make changes to the shape, equipment and technology.

Symbol	Explanation
	Read instructions Please read the information in these instructions carefully to understand all of the benefits of your new appliance.
	Additional information on the Internet The digital manual with additional information and in other languages can be found via the QR code on the front of the manual or by entering the service number at **home.liebherr.com/fridge-manuals**. The service number can be found on the serial tag: 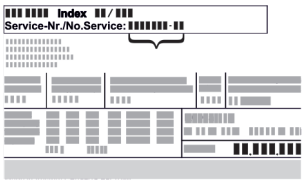 *Fig.* Example illustration
	Check appliance Check all parts for transport damage. If you have any complaints, please contact your agent or customer service.
	Differences These instructions apply to a range of models, so differences are possible. Sections that apply to certain models only are marked with an asterisk (*).
	Instructions and results Instructions are marked with a ▶. Results are marked with a ▷.
	Videos Videos about the appliances are available on the YouTube channels of Liebherr-Hausgeräte.

Open source licences:

The appliance contains software components that use open source licences. Information on the open source licences used can be found here: **home.liebherr.com/open-source-licences**

1 General safety instructions

- Please keep this assembly manual in a safe place so you can refer back to it at any time.
- If you pass the appliance on, please hand this assembly manual to the next user.
- Read this assembly manual carefully before installation and use to ensure safe and correct use of the appliance. Follow the instructions, safety instructions and warning messages included at all times. They are important for ensuring you can operate and install the appliance safely and without any problems.
- First read the general safety instructions in the "General safety instructions" section of the **operating instructions**, which accompany these installation instructions, and follow them. If you cannot find the **operating instructions**, you can download the **operating instructions** from the internet by entering the service number at **home.liebherr.com/fridge-manuals**.

*** Depending on model and options**

The service number can be found on the serial tag:

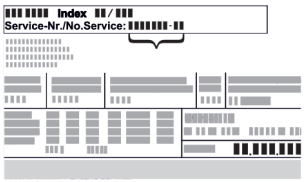

- **Observe the warning messages and other detailed information in the other sections when installing the appliance:**

⚠	DANGER	identifies a situation involving direct danger which, if not obviated, may result in death or severe bodily injury.
⚠	WARNING	identifies a dangerous situation which, if not obviated, may result in death or severe bodily injury.
⚠	CAUTION	identifies a dangerous situation which, if not obviated, may result in minor or medium bodily injury.
	NOTICE	identifies a dangerous situation which, if not obviated, may result in damage to property.
	Note	identifies useful instructions and tips.

2 Installation requirements

The installation conditions are crucial to ensure that you can operate your appliance safely, efficiently and without problems.

- Observe all safety instructions.
- Consider the location and position in the room.

⚠ **WARNING**
Danger of fire due to incorrect positioning!
If the mains cable or plug touches the back of the appliance, the vibration can damage the mains cable or the plug resulting in a short circuit.
▶ Make sure the mains cable is not trapped under the appliance when you position the appliance.
▶ Stand the appliance so that it is not touched by connectors or main cables.
▶ Do not connect any appliances to sockets in the area of the back of the appliance.
▶ Do **not** place and operate multi-sockets/power distributors and other electronic devices (such as halogen transformers) at the back of the appliances.

⚠ **WARNING**
Fire hazard due to dampness!
If live parts or the mains lead become damp this may cause short circuits.
▶ The appliance is designed for use in enclosed areas. Do not operate the appliance outdoors or in areas where it is exposed to splash water or damp conditions.

⚠ **WARNING**
Leaking coolant and oil!
Fire. The coolant contained in the appliance is eco-friendly, but also flammable. The oil contained in the appliance is flammable. Escaping coolant and oil can ignite if the concentration is high enough and in contact with an external heat source.
▶ Do not damage the pipelines of the coolant circuit and the compressor.

2.1 Installation site

- Only operate the appliance when it is installed.
- If the appliance is installed in a very damp environment, condensation may form on the appliance exterior.
  Always make sure there is good ventilation and aeration at the installation site.
- The more refrigerant there is in the appliance, the larger than room must be in which it is located. In rooms that are too small, a leak can product a flammable gas/air mixture. For every 8 g of refrigerant, the installation room must be at least 1 m^3 in size. Information on the refrigerant contained is given on the type plate inside the appliance.
- The floor on which the appliance stands must be horizontal and level.

2.2 Position in space

- Do not install the appliance in direct sunlight or near radiators or similar sources of heat.
- Only fit the appliance into solid units.
- Use in hazardous areas is not permitted.

3 Appliance dimensions

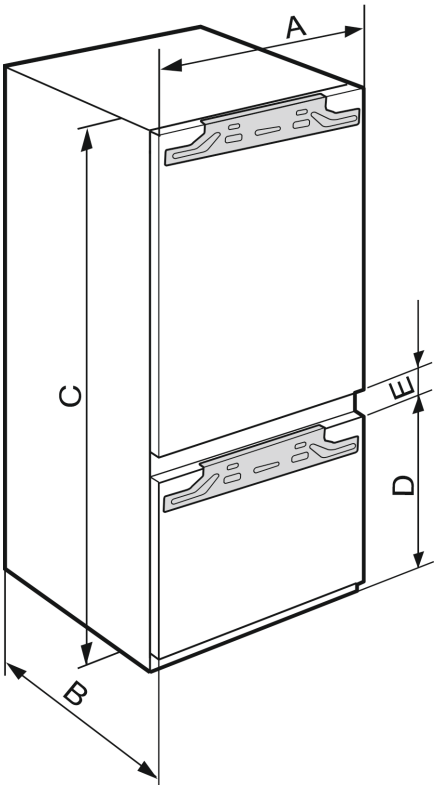

Fig. 1

Appliance dimensions

ICB..(i) 51..	
A (mm)	559
B (mm)	546
C (mm)	1770
D (mm)	549
E (mm)	15

Niche height 1780 - combinations with 2 freezer compartments

IC(B)(N)..(i) 51.. / ICBNbsci 5173 / IKG 51Ve03 / IKGN 51Vc03 / IKGBN 51VD23i / ICNbsci 5173 / SICN..i 51.. / IKGN 51Ve03 / IKGNc 1783	
A (mm)	559
B (mm)	546
C (mm)	1770
D (mm)	695
E (mm)	15

Niche height 1780 - combinations with 3 freezer compartments

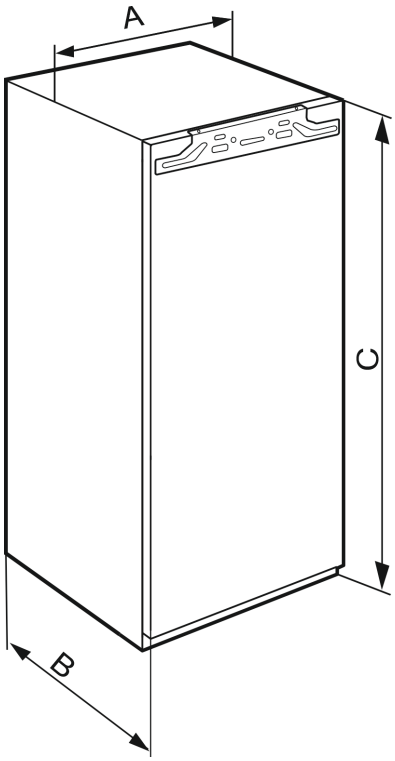

Fig. 2

IFN..(i) 35..	
A (mm)	559
B (mm)	546
C (mm)	712

Niche height 720 - single-door appliances

IFN..(i) 39.. / IR..(i) 39.. / SIBa20i 3905 / SIFN..i 39..	
A (mm)	559
B (mm)	546
C (mm)	872

Niche height 880 - single-door appliances

IR(B)..(i) 40..	
A (mm)	559
B (mm)	546
C (mm)	1022

Niche height 1020 - single-door appliances

IR(B)..(i) 41.. / IRBbsbi 4170 / SIFN..i 41..	
A (mm)	559
B (mm)	546
C (mm)	1213

Niche height 1220 - single-door appliances

IR(B)..(i) 45.. / IRBbsbi 4570 / SIFN..i 45..	
A (mm)	559
B (mm)	546
C (mm)	1395

Niche height 1400 - single-door appliances

IRB..i 48..	
A (mm)	559
B (mm)	546
C (mm)	1572

Niche height 1580 - single-door appliances

IR(B)(P)..(i) 51.. / IRD..i 51.. / IRBbsci 5170 / IRBbsci 5171 / IRBPbsci 5170 / IKB 51Vc50i / IKB 51Vc51i / IK 51Ve00 / IK 51Ve01 / IK 51Vd00 / SIFN..(i) 51.. / SIFNbsdi 51.. / IK(B).. 1780 / IK(B).. 1784 / SIGN 51Vd28	
A (mm)	559
B (mm)	546
C (mm)	1770

Niche height 1780 - single-door appliances

*** Depending on model and options**

4 Recess dimensions

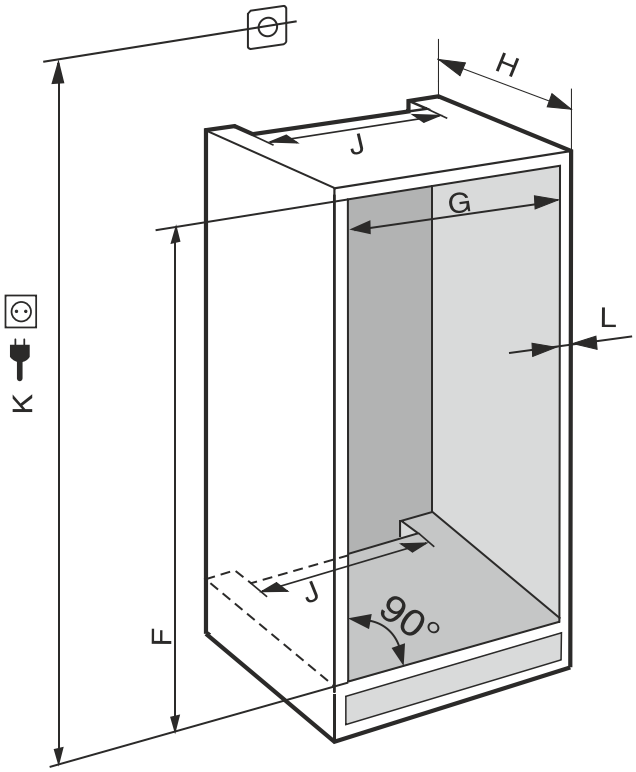

Fig. 3 ***(K):*** *max. 2100 mm*

Observe the following information for devices with a fixed water connection:

- Water connection (see 7 Water connection*)
- Connecting the device to the water supply (see 16 Connecting the appliance to the water supply*)

IFN..(i) 35..	
F (mm)	714 to 730
G (mm)	560 to 570
H (mm)	min. 550, recommended 560
J (mm)	min. 500
L (mm)	max. 19

IFN..(i) 39.. / IR..(i) 39.. / SIBa20i 3905 / SIFN..i 39..	
F (mm)	874 to 890
G (mm)	560 to 570
H (mm)	min. 550, recommended 560
J (mm)	min. 500
L (mm)	max. 19

IR(B)..(i) 40..	
F (mm)	1024 to 1040
G (mm)	560 to 570
H (mm)	min. 550, recommended 560
J (mm)	min. 500
L (mm)	max. 19

IR(B)..(i) 41.. / IRBbsbi 4170 / SIFN..i 41..	
F (mm)	1216 to 1236

IR(B)..(i) 41.. / IRBbsbi 4170 / SIFN..i 41..	
G (mm)	560 to 570
H (mm)	min. 550, recommended 560
J (mm)	min. 500
L (mm)	max. 19

IR(B)..(i) 45.. / IRBbsbi 4570 / SIFN..i 45..	
F (mm)	1397 to 1413
G (mm)	560 to 570
H (mm)	min. 550, recommended 560
J (mm)	min. 500
L (mm)	max. 19

IRB..i 48..	
F (mm)	1574 to 1590
G (mm)	560 to 570
H (mm)	min. 550, recommended 560
J (mm)	min. 500
L (mm)	max. 19

IC(B)(N)..(i) 51.. / ICBNbsci 5173 / IKG 51Ve03 / IKGN 51Vc03 / ICNbsci 5173 / IKGN 51Ve03 / IKGBN 51Vd23i / IR(B)(P)..(i) 51.. / IRD..i 51.. / IRBbsci 5170 / IRBbsci 5171 / IRBPbsci 5170 / IKB 51Vc50i / IKB 51Vc51i / IK 51Vd00 / IK 51Ve00 / IK 51Ve01 / IK(B).. 1780 / IK(B).. 1784 / IKGNc 1783 / SICN..i 51.. / SIFN..(i) 51.. / SIFNbsdi 51.. / SIGN 51Vd28	
F (mm)	1772 to 1788
G (mm)	560 to 570
H (mm)	min. 550, recommended 560
J (mm)	min. 500
L (mm)	max. 19

The specified energy consumption was determined with a kitchen unit depth of 560 mm. The appliance will work properly at a kitchen unit depth of 550 mm, but with a slightly higher energy consumption.

▶ Check the wall thickness of adjacent cabinets: They must have a minimum of 16 mm .
▶ Only fit the appliance into stable, solid kitchen units. Secure the unit against tipping.
▶ Align the cabinets with a spirit level and a try square. If necessary, level them by putting something underneath them.
▶ Make sure floor and the side panels of the cabinet are at right angles to each other.

5 Ventilation requirements

NOTICE
Covered vents!
Damage. Appliance can overheat, which can reduce the service life of various parts of the appliance and lead to operational impairments.

▶ Always make sure there is good ventilation.
▶ Always keep vents or ventilation grids in the appliance housing and in the kitchen furniture (fully integrated appliance) unobstructed.
▶ Always keep the fan air vents unobstructed.

Always follow the required ventilation gaps:

- The depth of the ventilation shaft at the back of the cabinet must be at least 38 mm.
- At least 200 cm^2 is required for the ventilation gap cross sections in the plinth and the housing cabinet.
- As a rule, the larger the ventilation cross-section, the more efficiently the appliance will run.

Sufficient ventilation is required for the operation of the appliance. The ventilation grids provided ensure an effective ventilation cross-section on the appliance of 200 cm^2. If you replace the ventilation grids with a cover plate the ventilation cross-section must be as least as large as the ventilation grid provided by the manufacturer.

6 Custom panel weights

NOTICE
An excessively heavy custom panel can potentially cause damage!
If the custom panel is too heavy, damage to the hinges cannot be ruled out, which may compromise the functionality of the unit.

▶ Before fitting the custom panel, ensure the custom panel does not exceed the permissible weight.

Recess height (mm)*	**Maximum weight of custom panel (kg)***
720	16
880	16
1020	13
1220	19
1400	21
1580	22
1780	26

Single-door fridges and freezers

Niche height (mm)*	**Maximum weight of custom panel (kg)***	
	Fridge compartment door*	Freezer compartment door*
1780	18	12

Customising combinations

7 Water connection*

If your appliance has a fixed water connection, a hose is supplied with it.

Note
You can purchase a hose of a different length as an accessory.

Overview of dimensions for the water connection:	(see 7.1 Dimensions for the water connection)
Requirements for the water pressure:	(see 7.2 Water pressure)
Make the water connection:	(see 16 Connecting the appliance to the water supply*)

7.1 Dimensions for the water connection

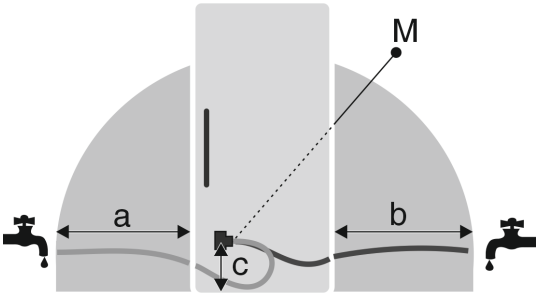

Fig. 4

(a) Maximum available hose length*
(b) Maximum available hose length*
(c) Distance of solenoid valve to floor*
(M) Solenoid valve*

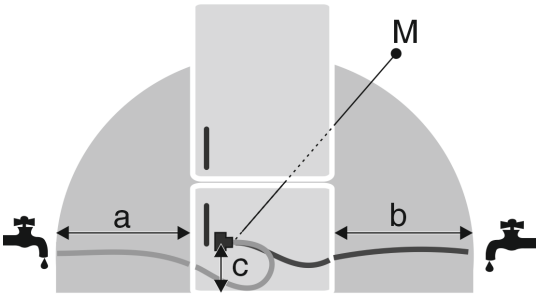

Fig. 5

(a) Maximum available hose length*
(b) Maximum available hose length*
(c) Distance of solenoid valve to floor*
(M) Solenoid valve*

a	b	c
~ 1200 mm	~ 1200 mm	~ 55 mm

7.2 Water pressure

The water connection line and solenoid valve of the appliance are suitable for a water pressure of up to 1 MPa (10 bar).

To ensure that the appliance functions correctly (flow rate, ice cube size, noise level), maintain the following water pressure:

Water pressure:	
bar	MPa
1.5 to 6.2	0.15 to 0.62

Water pressure when using the water filter:*	
bar*	MPa*
2.8 to 6.2	0.28 to 0.62

If the pressure is higher than 6.2 bar:

▶ Fit a pressure reducer.
▶ Make the water connection. (see 16 Connecting the appliance to the water supply*)

8 Transporting the appliance

8.1 Transporting the appliance for initial use

Ensure that the following requirements are met:

- ❑ The appliance is packaged.
- ❑ The appliance is upright.

▶ Transport the appliance with the help of two people.
▶ Unpacking the appliance. (see 9 Unpacking the appliance)

8.2 Transporting the appliance after initial use

Observe the following instructions if you wish to transport or move the appliance again after initial use.

Ensure that the following requirements are met:

- ❑ The appliance is emptied.
- ❑ The appliance is upright.
- ❑ Door is secured against accidental opening.
- ❑ The pull-out trolley is secured against accidental opening.

▶ Transport the appliance with the help of two people.

9 Unpacking the appliance

Before you connect the appliance, report any damage immediately to the delivery company.

▶ Check the appliance and the packaging for damage during transport. Contact the supplier immediately if you suspect any level of damage.
▶ Remove all materials from the back or the side walls of the appliance that may prevent proper installation or ventilation.
▶ Remove all protective films from the appliance. Do not use sharp or pointed objects for this.

10 Setting up the appliance

CAUTION
Risk of injury due to heavy appliance!
▶ Have two people transport the appliance to its installation site.

WARNING
Danger of injury and damage due to the appliance being unstable!
The appliance can topple over.
▶ Secure the appliance as described in the instructions.

WARNING
Fire hazard and danger of damage!
▶ Do not place appliances emitting heat e.g. microwaves, toasters etc. on the appliance!

If possible, have the appliance installed in the kitchen unit by a professional.

Do not install the appliance on your own.

10.1 After installation

▶ Remove all transport safety components.

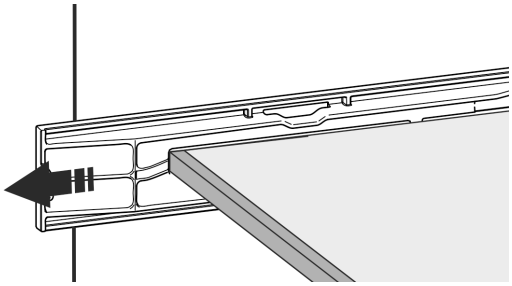

*Fig. 6 **

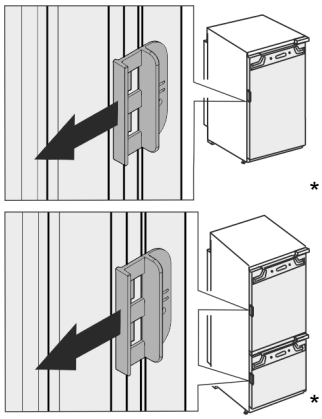

*

▶ Pull off the transport lock on the appliance door.

*

▶ Clean the appliance (see User Guide, Cleaning the appliance).

11 Installing multiple appliances

The appliances have been developed for different installation methods. If you wish to install several appliances next to each other or on top of each other, ensure that the following requirements are met:

- ❑ Only install appliances next to or on top of each other if they have been developed for this.
- ❑ Observe notices and the following table.

NOTICE
Risk of damage due to condensate!
▶ Do not place the appliance directly next to another cooling/refrigeration unit.

NOTICE
Risk of damage due to condensation!
▶ Do not place the appliance directly on top of another cooling/refrigeration unit.

Model	Installation method
All models	Standalone
Models with a model designation starting with **S...**.	Side-by-Side (SBS)
Models up to a maximum niche height of 880 mm and with a heated ceiling can be installed “on top of each other”. Top appliance: up to a maximum niche height of 140 mm	On top of each other

Models and their installation method

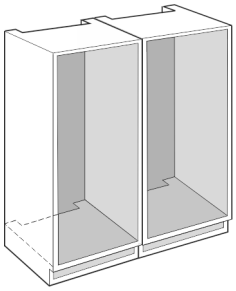

Fig. 7

Install each appliance into a separate unit niche.

12 Disposing of packaging

WARNING

Danger of suffocation due to packing material and plastic film!

▶ Do not allow children to play with packing material.

The packaging is made of recyclable materials:

- corrugated board/cardboard
- expanded polystyrene parts
- polythene bags and sheets
- polypropylene straps
- nailed wooden frame with polyethylene panel*

▶ Take the packaging material to an official collecting point.

13 Explanation of symbols used

	There is a danger of injury during this step! Observe the safety instructions!
	The instruction is valid for several models. Only perform this step if it applies to your appliance.
	For installation, please refer to the detailed description in the text section of the instructions.
	Section is valid for either a single-door appliance or a double-door appliance.
	Choose between the following options: Appliance with door hinge on the right or appliance with door hinge on the left.
	Installation step required for IceMaker and/or InfinitySpring.
	Only loosen or lightly tighten the screws.
	firmly tighten the screws.
	Check whether the following step is necessary for your model.
	Check that the components used are correctly installed/fitted.
	Measure the specified dimension and correct if necessary.
	Tool for installation: Metre stick
TORX® 20	Tool for installation: Cordless screwdriver and use A lengthwise bit insert is recommended for good access to the screws.
	Tool for installation: Spirit level
SW7 SW10	Tool for installation: Open-end wrench with AF 7 and AF 10
	Two people are required for this step.
	The step takes place at the marked location on the appliance.
	Aid for installation: String
	Aid for installation: Protractor
	Aid for installation: Screwdriver

* Depending on model and options

	Aid for installation: Scissors
	Aid for installation: Marking pen, wipeable
	Included: Remove components
	Dispose of components that are no longer required in accordance with local regulations.

14 **** freezer compartment door*

It is very easy to reposition the hinge of the **** freezer compartment door if the main door hinge is swapped. If the main door of the appliance can be opened to more than 115° (1), you can open the freezer compartment without repositioning the hinge. If the opening angle (2) of the appliance door is less than this, the hinge must be repositioned.

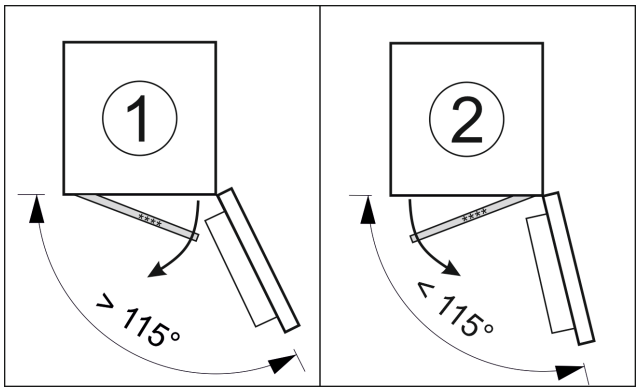

Fig. 8

14.1 Moving the door hinge

The slider for moving the door hinge is located on the back of the **** freezer compartment door at the bottom.

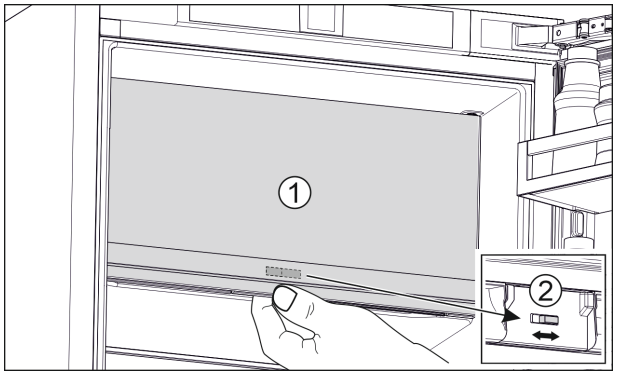

Fig. 9

▶ Close the **** freezer compartment door (1).
▶ Grab the **** freezer compartment door from below.
▶ Move the slider (2) either to the right or to the left.

15 Reversing the door

Tool

Fig. 10

NOTICE
Live parts!
Damage to electrical components.
▶ Remove the mains plug before you reverse the door.

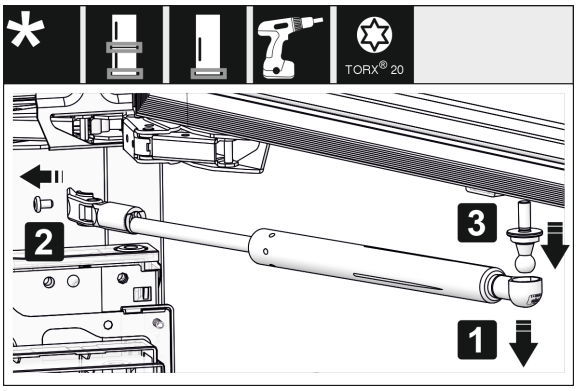

*Fig. 11 **

▶ Removing the soft stop damper: Remove the soft stop damper from the ball stud (1). Unscrew the retainer (2). Remove the ball stud with a screwdriver (3).*

Note
If the closing damper is only slightly above the floor, you can only remove the ball pins when the door is removed.*

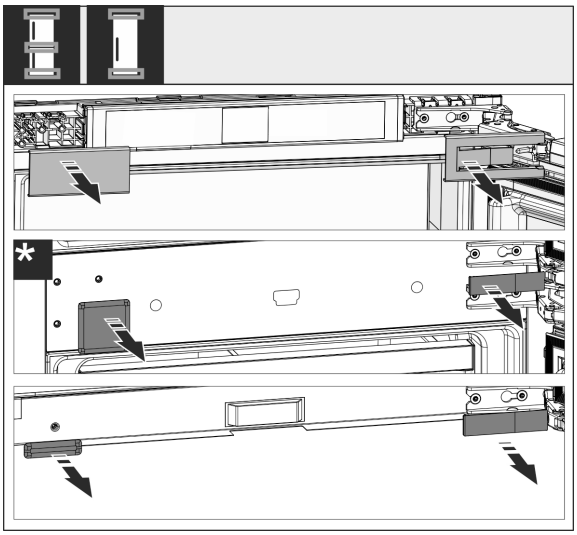

Fig. 12

▶ Remove covers.

Note
When removing the covers, ensure that the surface does not get scratched.

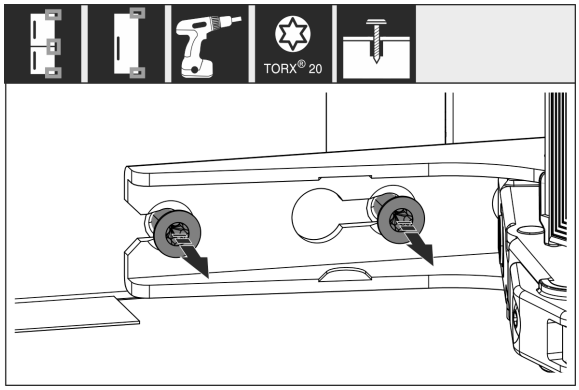

Fig. 13

▶ Loosen the screws on **all** hinges but do not remove them.

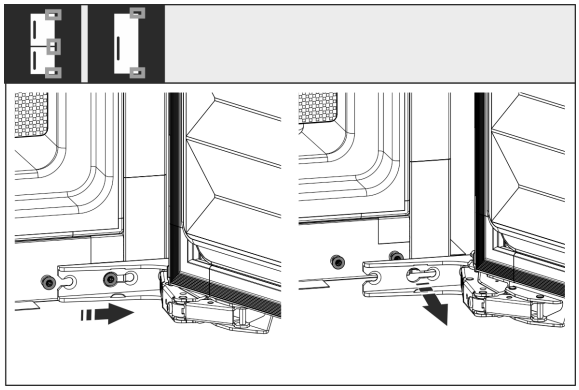

Fig. 14

▶ Removing the door: Push the door forward and then out, unhang it and put it to one side.

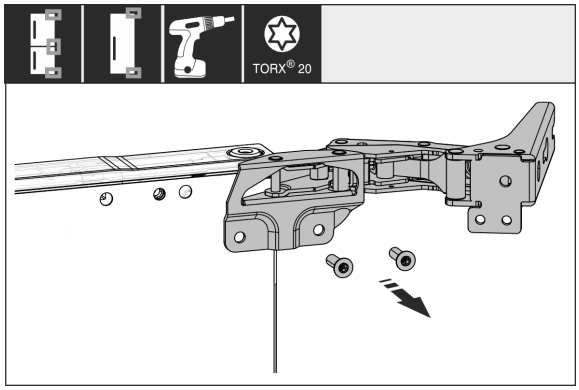

Fig. 15

▶ Unscrew all hinges and set aside together with the screws.

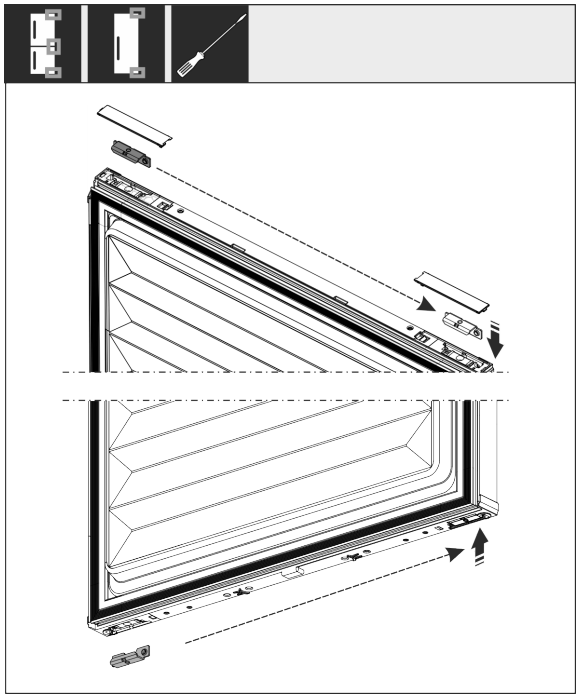

Fig. 16

▶ Loosen and shift the bracket at the top and bottom of the door. The bracket must be shifted so you can screw on the hinges.

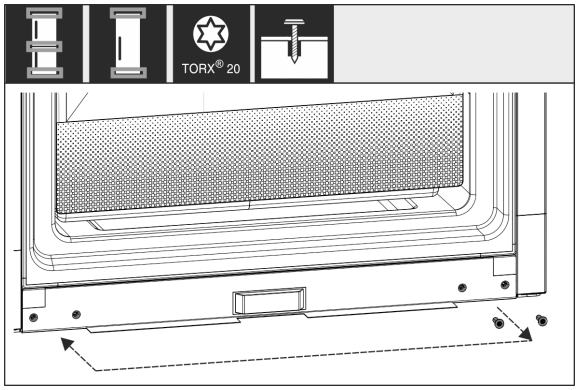

Fig. 17

▶ Shift the screws to fasten the hinge. Do not screw tightly after shifting – you need to hang the hinges later.

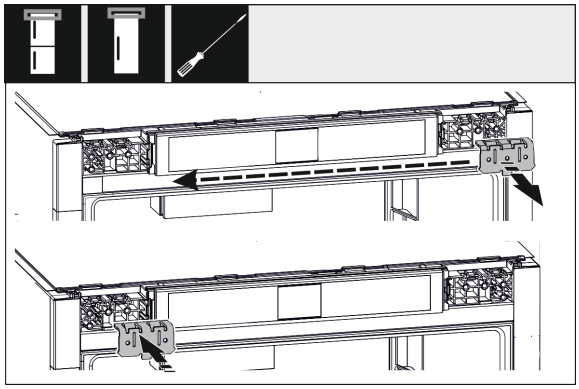

Fig. 18

▶ Move the fixing bracket to the opposite side.

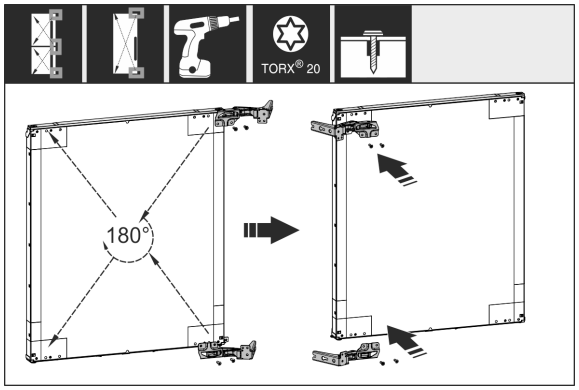

Fig. 19

▶ Turn all hinges 180° to the opposite side and screw firmly.

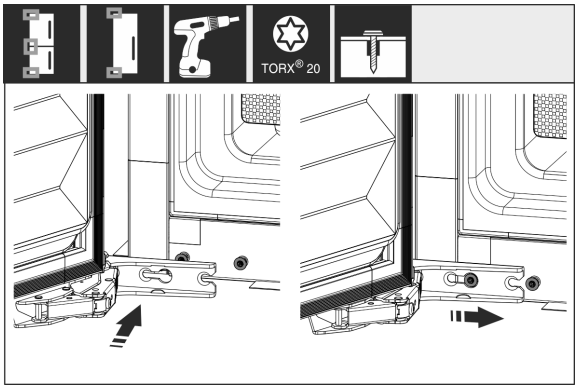

Fig. 20

▶ Refitting the door: Hang the door with its hinges and tighten the screws.

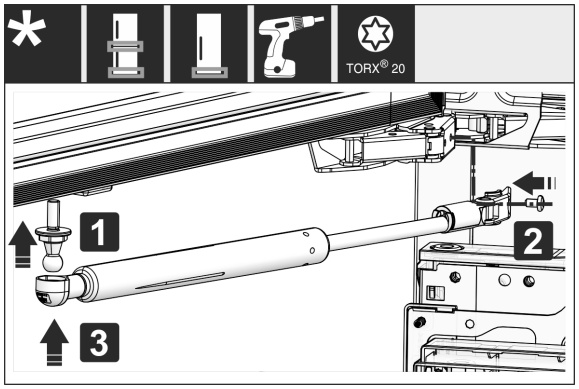

*Fig. 21 **

▶ Refitting the closing dampers: Screw in the ball studs (1), tighten the bracket (2) and hang the closing dampers in the ball studs.*

▶ Check all screws and retighten if necessary.

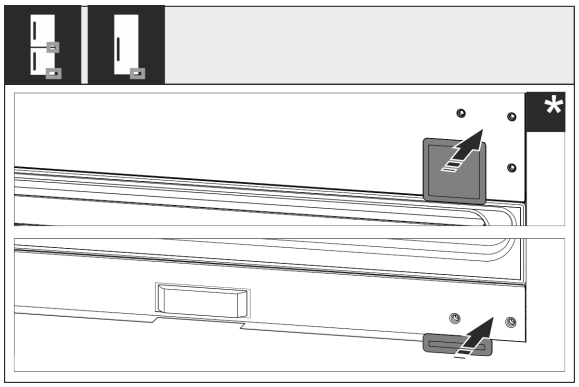

Fig. 22

▶ Reassemble the bottom and centre cover. Only replace the remaining covers after installing the appliance back into the cabinet.

16 Connecting the appliance to the water supply*

Make sure that the following requirements are fulfilled:

- ❑ The dimensions for the water supply connection are known and complied with. (see 7.1 Dimensions for the water connection)
- ❑ The correct water pressure is maintained. (see 7.1 Dimensions for the water connection)
- ❑ Water is supplied to the appliance via a cold water pipe which can withstand the operating pressure and is connected to the drinking water supply.
- ❑ All equipment and devices used to supply water must comply with the regulations in force in the respective country.
- ❑ The rear of appliance is accessible so that you can connect the appliance to the drinking water supply.
- ❑ The supplied hose is used. Old hoses have been disposed of.
- ❑ The hose connector contains a filter with a seal.
- ❑ There is a tap between the hose line and the domestic water connection so that you can turn off the water supply if necessary.
- ❑ The tap is not directly behind the appliance and is easily accessible. This way, you can push the appliance as far as possible into the cabinet recess and can quickly turn off the tap if necessary.

WARNING

Risk of electric shock from water!

▶ Before connecting to the water pipe: Disconnect the appliance from the mains.

▶ Before connecting to water supply lines: Shut off the water supply.

▶ Make sure that only qualified personnel connect the device to the drinking water supply.

WARNING

Risk of poisoning due to contaminated water!

▶ Only connect to the drinking water supply.

16.1 Connecting the hose

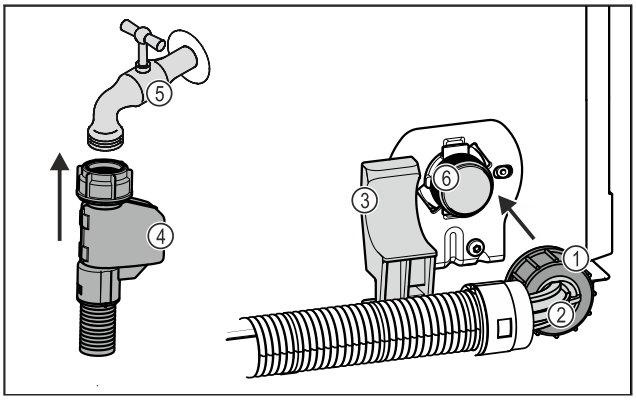

Fig. 23

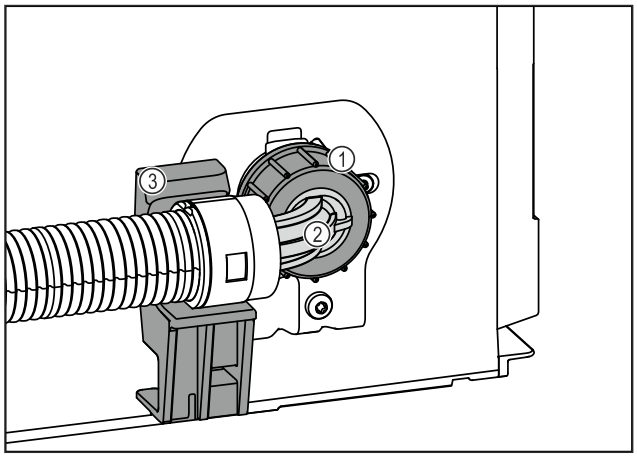

Fig. 23

(1) Nut
(2) Angled hose end
(3) Bracket
(4) Straight hose end
(5) Tap
(6) Solenoid valve: The solenoid valve is at the bottom on the back of the appliance. It has an R3/4 connecting thread.

NOTICE
Risk of damage from incorrect installation!
▶ Do not damage or kink the hose.
▶ Do not damage or kink the hose during installation in the cabinet recess.

Connecting the hose to the appliance:
▶ Position and hold the angled hose end *Fig. 23 (2)* horizontally on the bracket *Fig. 23 (3)*.
▶ Screw on the nut *Fig. 23 (1)* on by hand until it is firmly in place.
▷ The hose is connected to the appliance.

Connecting the hose to the tap:
▶ Connect the straight hose end *Fig. 23 (4)* to the tap *Fig. 23 (5)*.
▷ The hose is connected to the tap.

16.2 Checking the water system

Before you completely install the appliance in the cabinet recess, Liebherr recommends checking the water system for leaks.
▶ Put in the InfinitySpring water tank. (see 19 Water tank*) *
▶ Put in the InfinitySpring water filter. (see 20 Water filter*) *
▶ Slowly turn on the tap.
▶ Check the hose, water feed and connections for leaks.
▷ The water system has now been checked for leaks.
▷ The water system is not leaking: You can install the appliance completely in the cabinet recess.

Note
InfinitySpring: Before the first use, you must put the InfinitySpring into operation. To do this you must bleed and clean the water system. (see Quick Start Guide or operating instructions)*

IceMaker: Before the first use, you must clean the IceMaker. (see Quick Start Guide or operating instructions)*

17 Installing the appliance in the recess

Tool

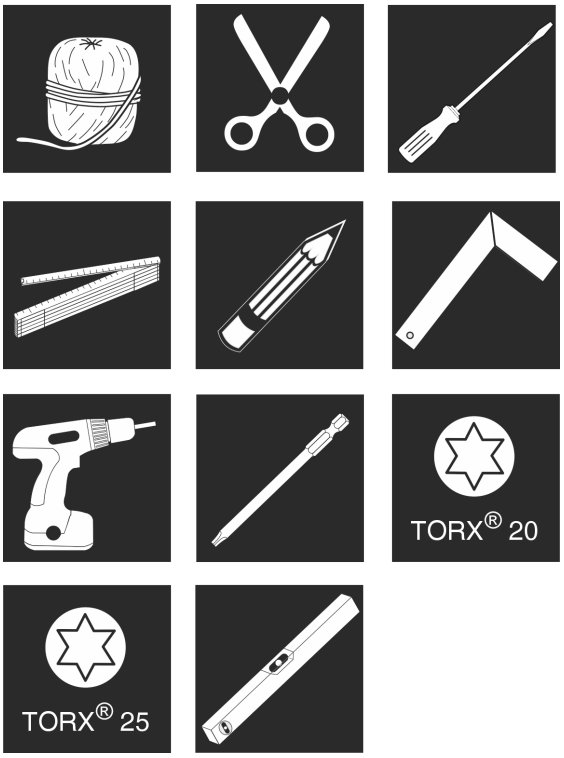

Fig. 24

Supplied assembly parts

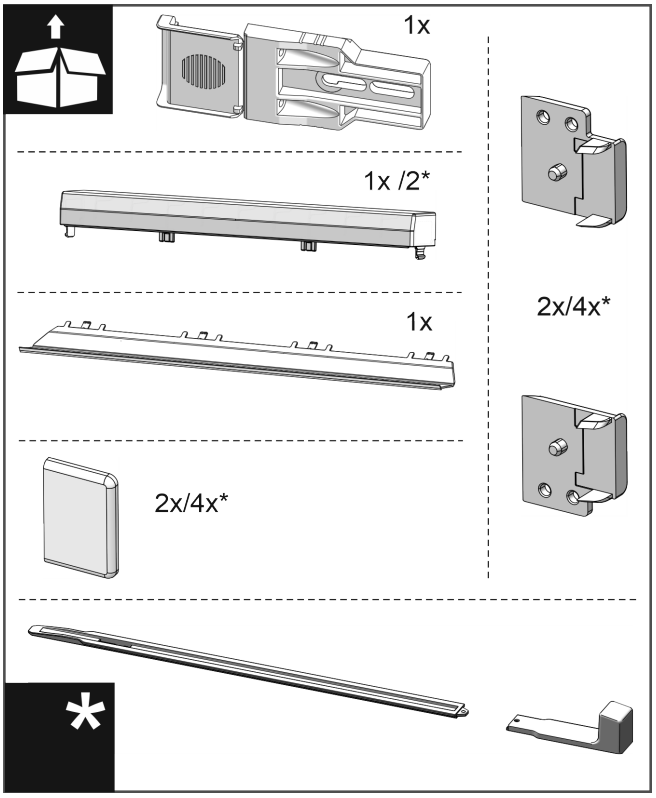

Fig. 25

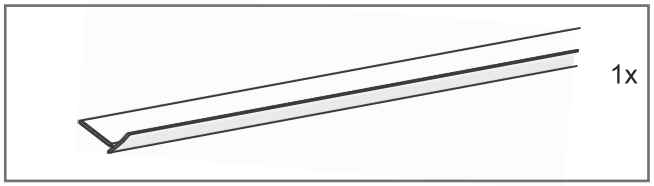

Fig. 26

*** Depending on model and options**

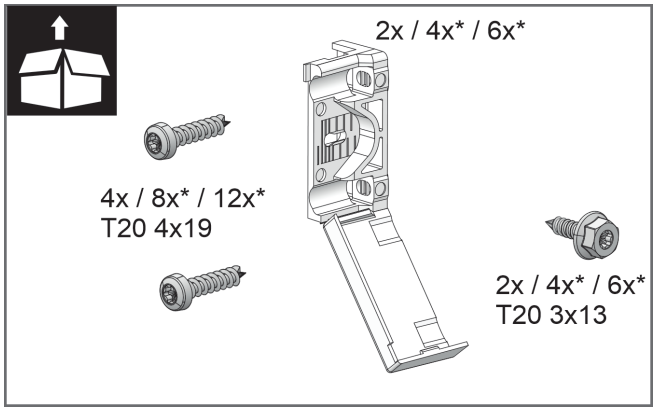

Fig. 27

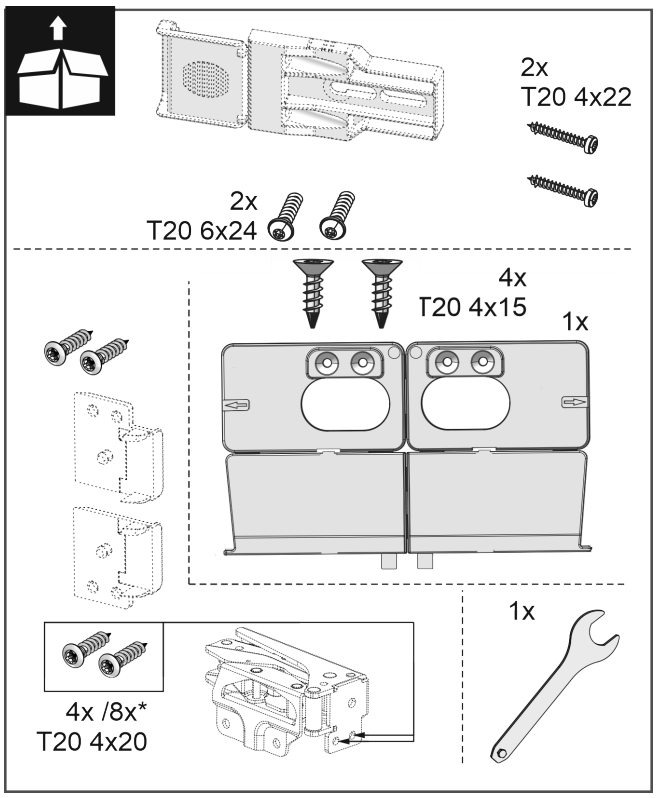

Fig. 28

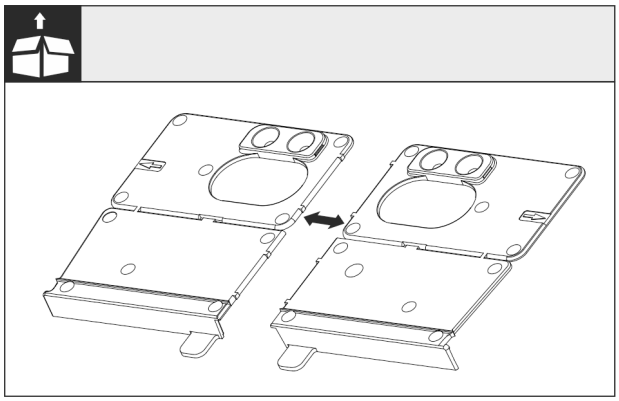

Fig. 29

▶ Disconnect the base installation bracket at the perforation.

NOTICE

Correct installation depth of the appliance.

▶ Using the mounting bracket ensures the correct installation depth of the appliance.

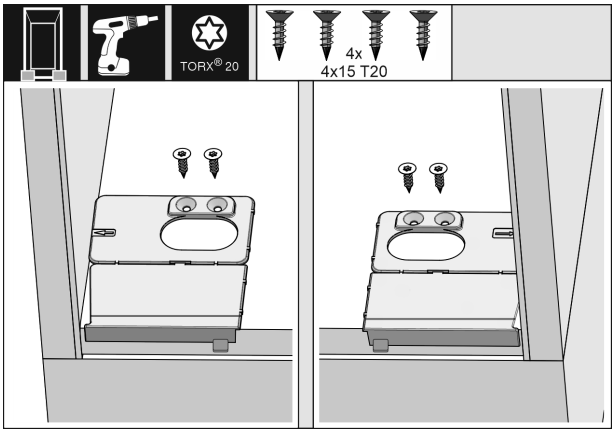

Fig. 30

▶ Screw the mounting brackets on the left and right of the recess floor, flush to the side wall.

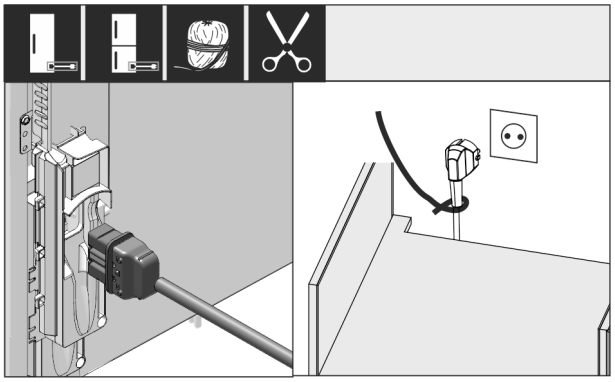

Fig. 31

▶ Remove the mains cable from the package.

▶ Plug the mains cable's IEC socket completely into the appliance plug on the back of the appliance. Ensure that the IEC socket is tight.

▶ Use a cord to lay the mains plug to a freely accessible socket.

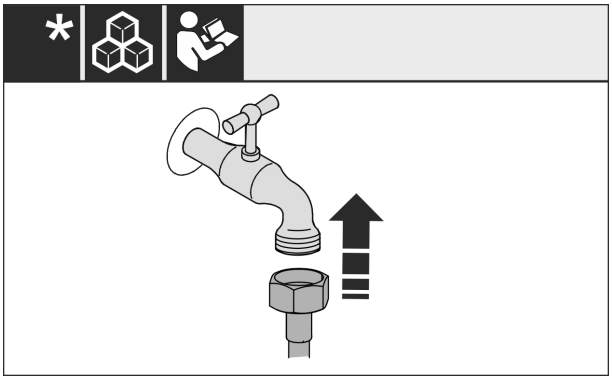

*Fig. 32 **

▶ If necessary, install the water connection at this point, following the instructions in the User Guide.*

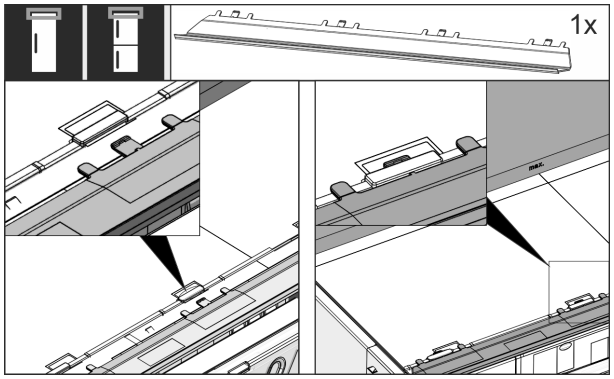

Fig. 33

▶ Insert the adapter panel on the top of the appliance. The panel can be moved to both sides.

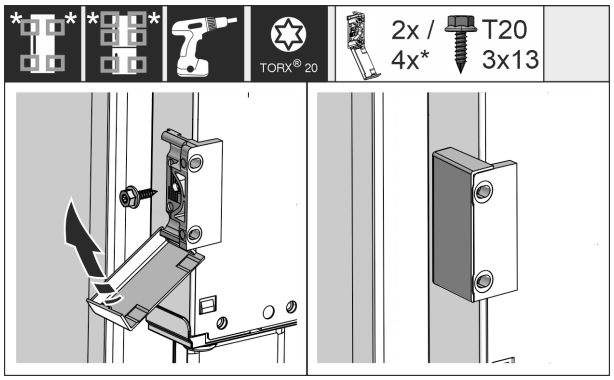

Fig. 34

▶ Fit the mounting bracket. Attach the mounting bracket at the height of the custom door panel handle. For a large door, use four mounting brackets.

▶ After assembly, fold the covers onto the bracket.

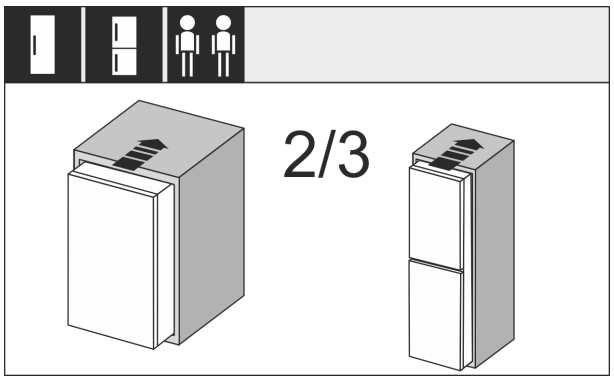

Fig. 35

▶ Insert the appliance 2/3 of the way into the recess.

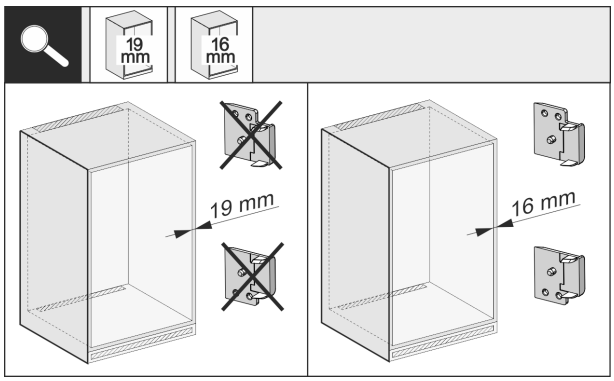

Fig. 36

▶ Check whether the unit side wall is 16 mm or 19 mm thick.

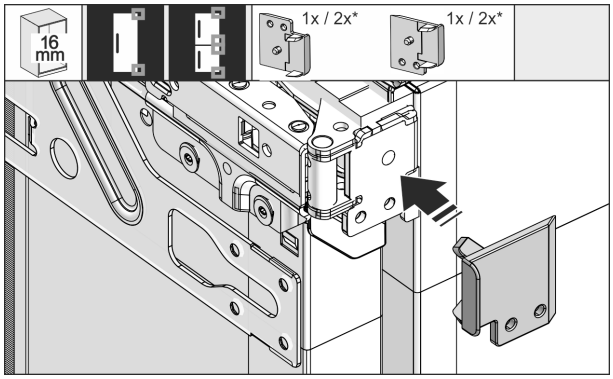

Fig. 37

▶ 16 mm thick unit side walls: Put a spacer on all hinges.

▶ 19 mm thick unit side walls: You do not need a spacer.

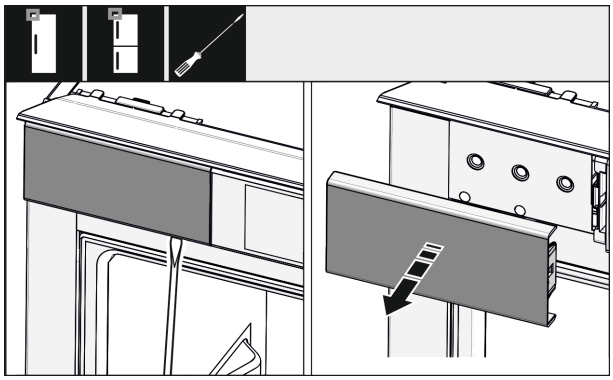

Fig. 38

▶ Use a screwdriver to loosen the cover at the top left and remove it.

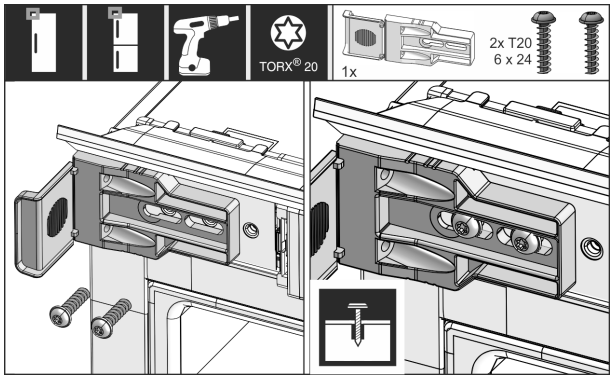

Fig. 39

▶ Loosely tighten the mounting bracket screw. The bracket should still be easy to move.

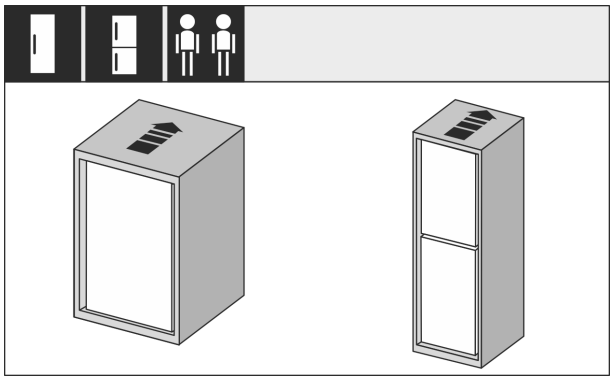

Fig. 40

*** Depending on model and options**

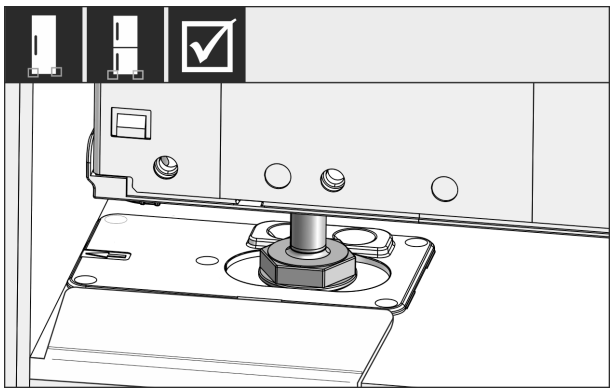

Fig. 41

WARNING

Risk of fire due to short circuit!

- ▶ When you push the appliance into the niche: do not kink, jam or damage the mains cable.
- ▶ The appliance must not be operated with a defective mains cable.

- ▶ Push the appliance all the way into the unit recess. The adjustable feet must rest in the recesses in the brackets on both sides.

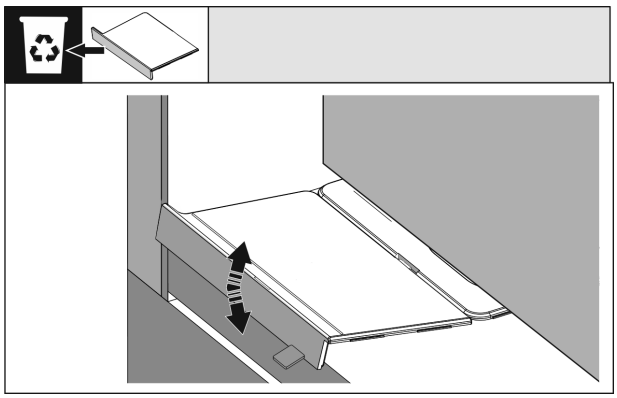

Fig. 42

- ▶ Remove the floor mounting bracket stopper. Loosen the stopper by moving it and, if necessary, pull it off using pliers.

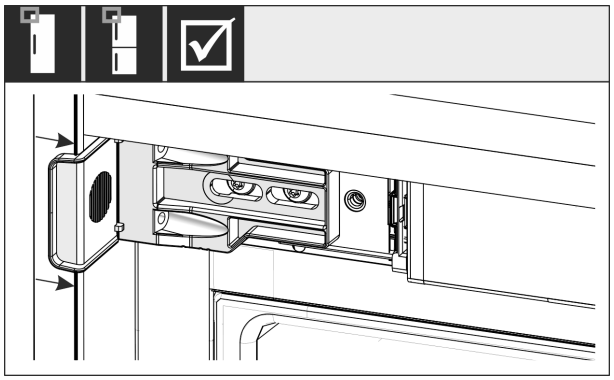

Fig. 43

- ▶ Check that the appliance is flush in the cabinet recess. The mounting bracket must be attached to the side wall of the cabinet recess.

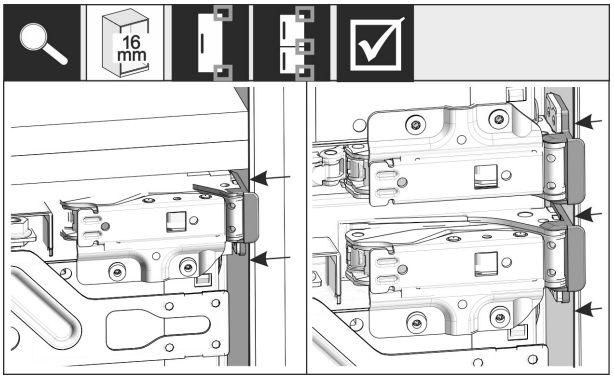

Fig. 44

Note

With 16 mm unit side walls, the spacers fit against the unit recess on the hinge side.

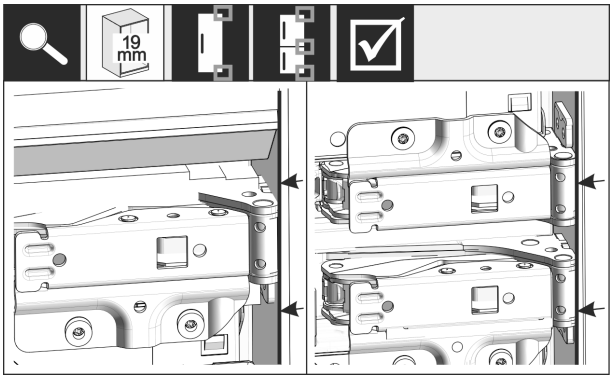

Fig. 45

- ▶ 19 mm thick unit side walls: Align the front of the hinges flush with the unit side wall.

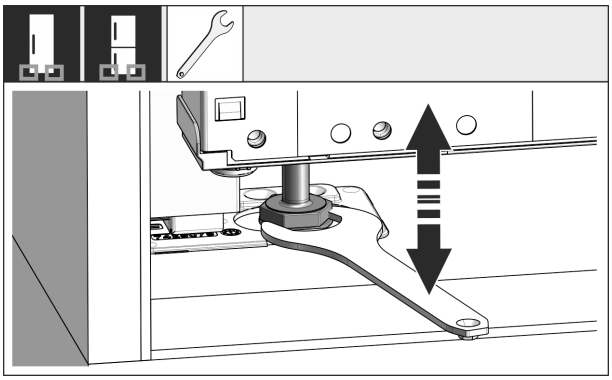

Fig. 46

- ▶ If necessary, use the adjustable feet to correct the tilt of the appliance.

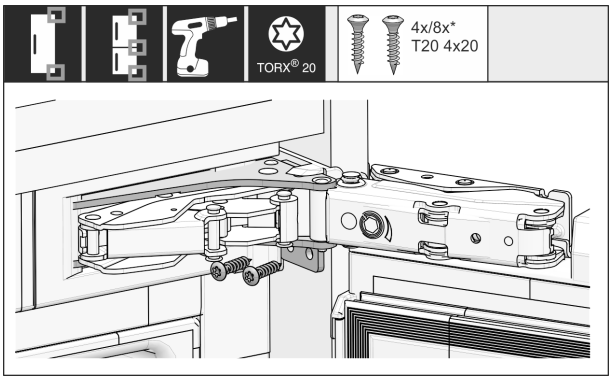

Fig. 47

- ▶ Screw on the appliance on the hinge side.

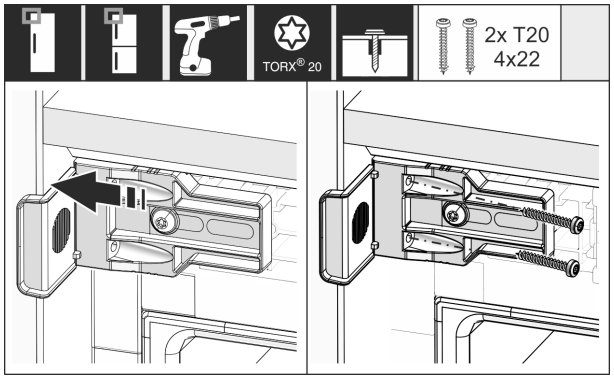

Fig. 48

▶ Move the bracket so it sits flush on the side wall of the cabinet recess.

▶ Tighten all the screws securely.

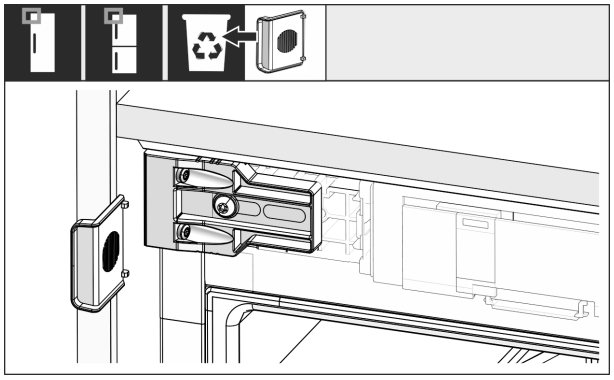

Fig. 49

▶ Remove the stop from the bracket on the handle side and dispose of it.

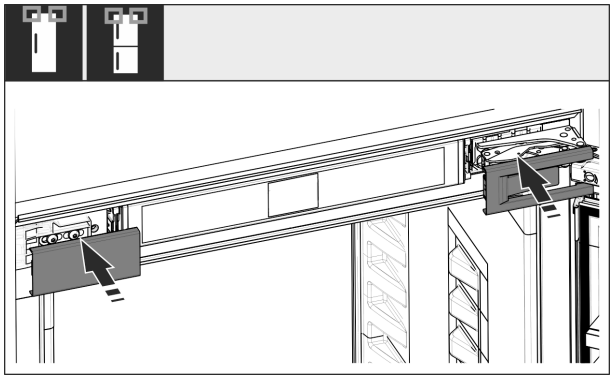

Fig. 50

▶ Put covers into position.

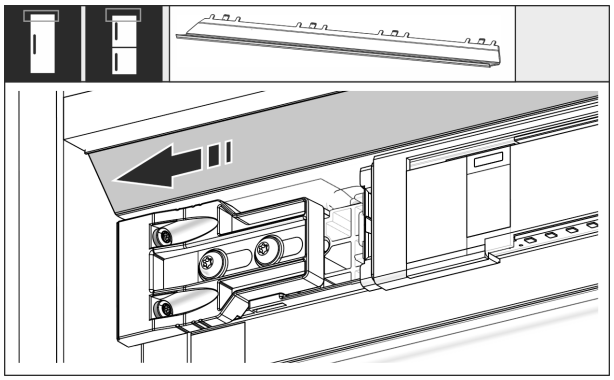

Fig. 51

▶ Slide the panel so that it sits flush with the side of the cabinet wall.

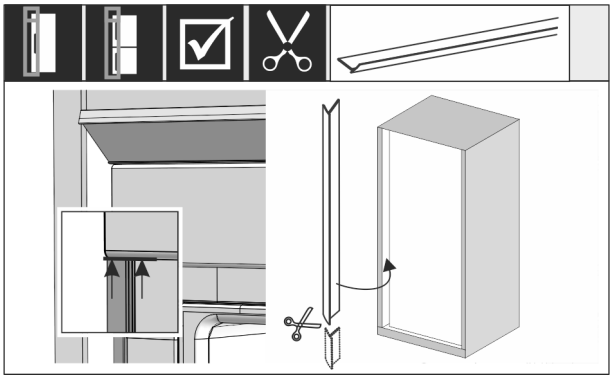

Fig. 52

▶ If necessary: Shorten the sealing strip as necessary with a sharp pair of scissors.

▶ Position the sealing strip below the top cover and press it in. The sealing strip is magnetic.

From a niche height of 1400 mm, install levelling rails:

Fig. 53

You must installed levelling rails under the appliance from a niche height of 1400 mm. The levelling rails **reduce the noise level**. Two levelling rails and an installation handle are enclosed as standard from a niche height of 1400 mm.

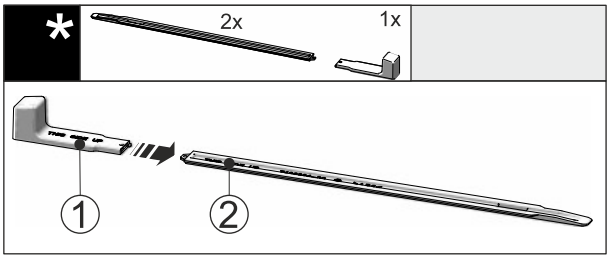

Fig. 54

▶ Attach the installation handle *Fig. 54 (1)* to the levelling rail *Fig. 54 (2)*.

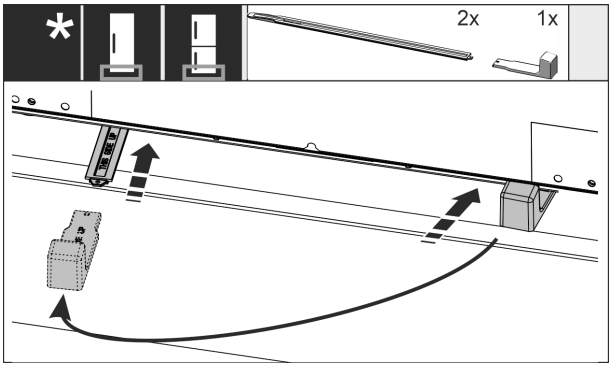

Fig. 55

▶ Push the levelling rail into the guide under the appliance base until it reaches the stop.

▶ Remove the installation handle and attach it to the second levelling rail.

*** Depending on model and options**

▶ Proceed in the same way for the second levelling rail.

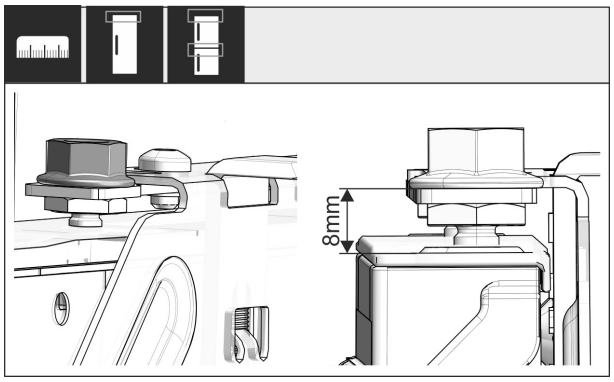

Fig. 56

▶ Close the door.

▶ Check the preset of 8 mm from the upper edge of the appliance door to the crosspiece support.

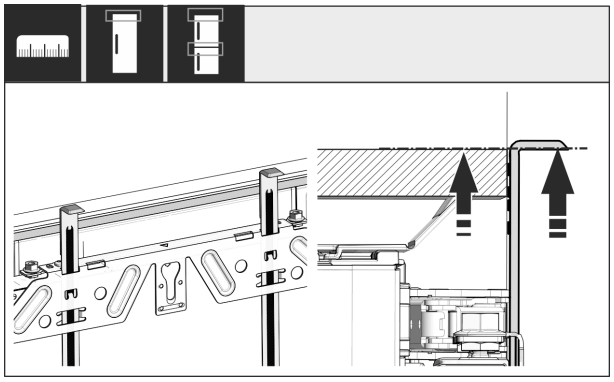

Fig. 57

▶ Push the assembly aids to the unit door height. Lower stop edge of the assembly aid = upper edge of the door to be assembled.

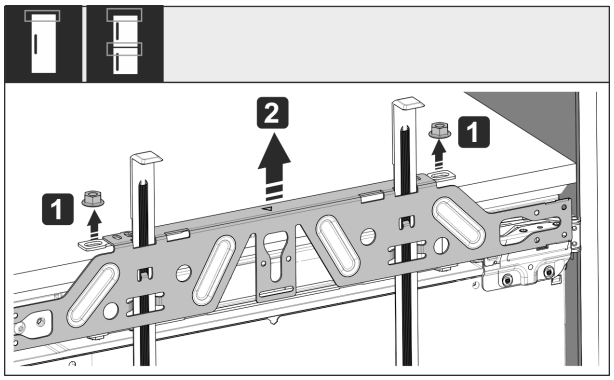

Fig. 58

▶ Loosen locknuts *Fig. 58 (1)*.

▶ Remove crosspiece *Fig. 58 (2)*.

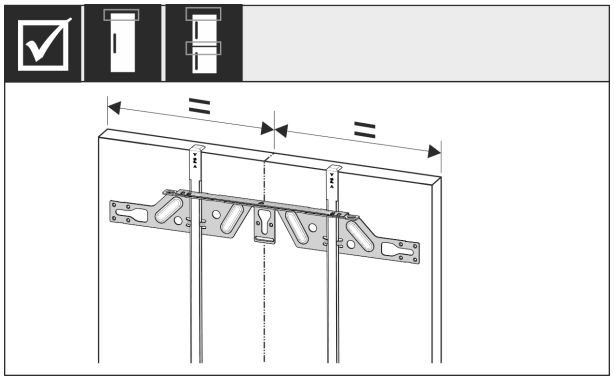

Fig. 59

▶ Hang the crosspiece on the inside of the unit door and make sure it is central.

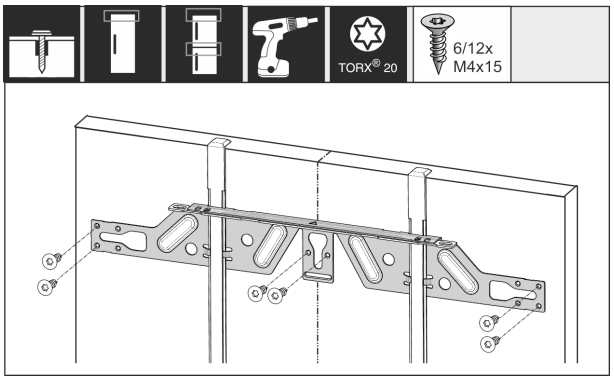

Fig. 60

▶ Fix the crosspiece using at least 6 screws for chipboard doors and at least 4 screws for panel doors.

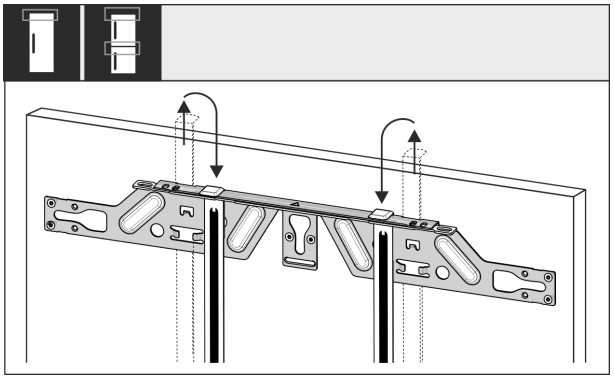

Fig. 61

▶ Remove the fitting aids, turn round and insert into the adjacent opening.

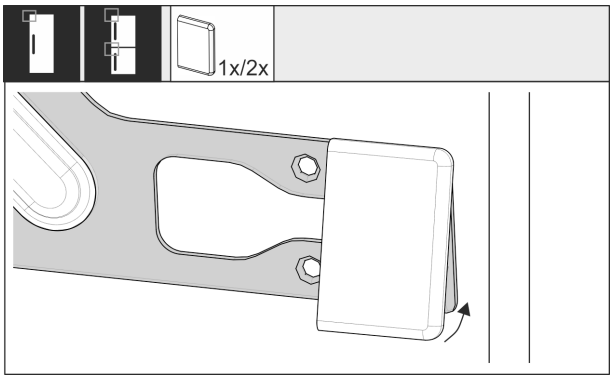

Fig. 62

▶ Put the cover on the crosspiece on the handle side.

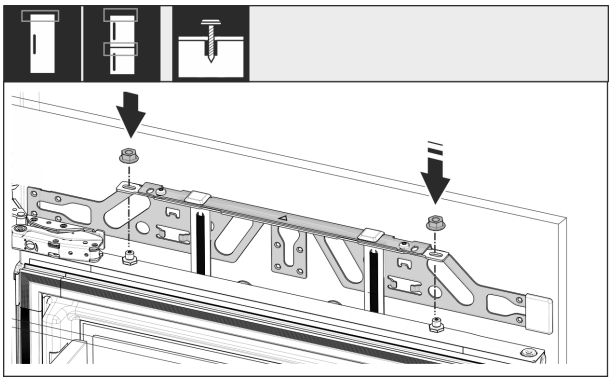

Fig. 63

▶ Attach the custom panel and loosely screw the lock nuts onto the adjusting bolts.

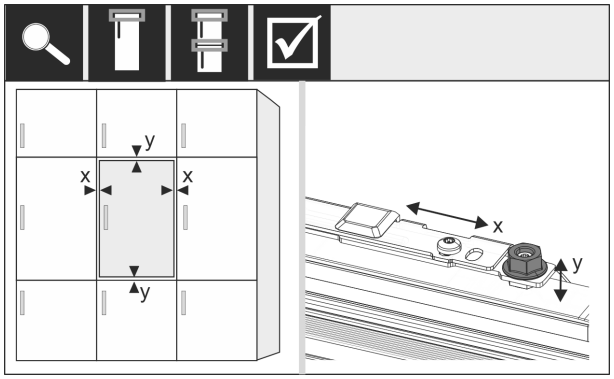

Fig. 64

▶ Align the custom panel in the X and Y direction using the adjusting bolts.

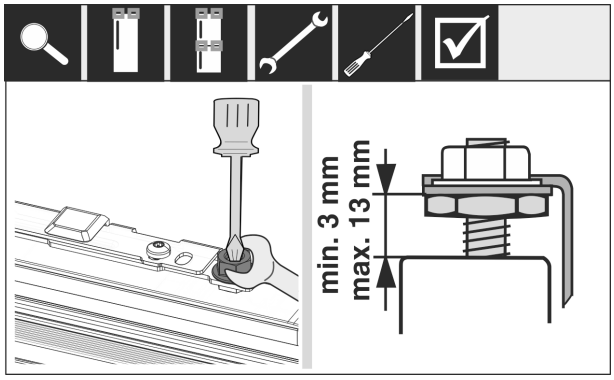

Fig. 65

▶ Tighten the lock nuts.

▶ Check the adjusted height.

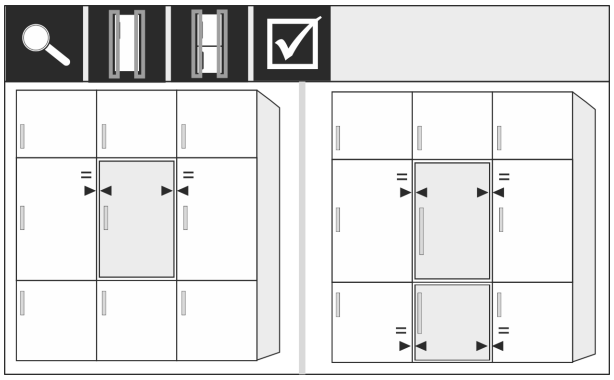

Fig. 66

For front panels thicker than 19 mm:

▶ Check the dimensions, weights and information in the following sections: (see 6 Custom panel weights) (see 18 Cabinet fronts)

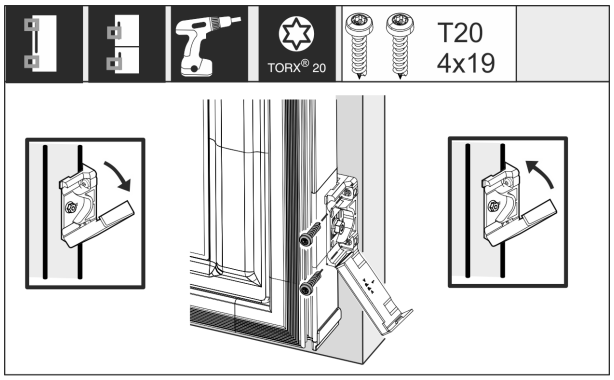

Fig. 67

Mounting the fastening bracket on the custom panel:

▶ Open the cover.

Mounting the fastening bracket on the custom panel:

▶ Align the front edge of the mounting bracket parallel with the custom door panel edge and screw the bracket down tightly.

Mounting the fastening bracket on the custom panel:

▶ Fold up the cover.

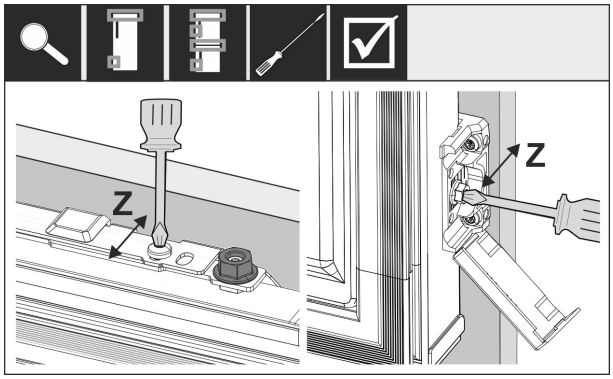

Fig. 68

Align the custom panel in the Z direction:

▶ Loosen the adjusting screw on the crosspiece and the screw on the mounting bracket.

▶ Move the door.

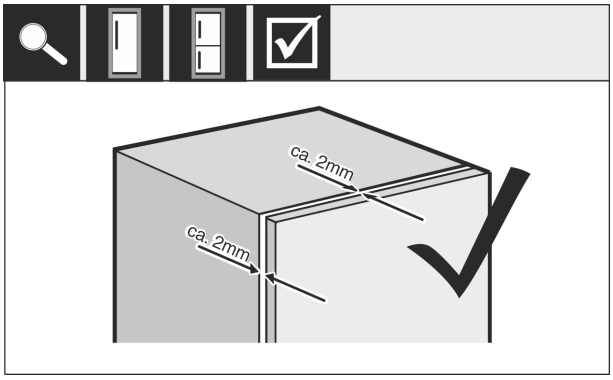

Fig. 69

▶ Check the gap between the custom panel and the unit body.

▶ Check all the screws and tighten them if necessary.

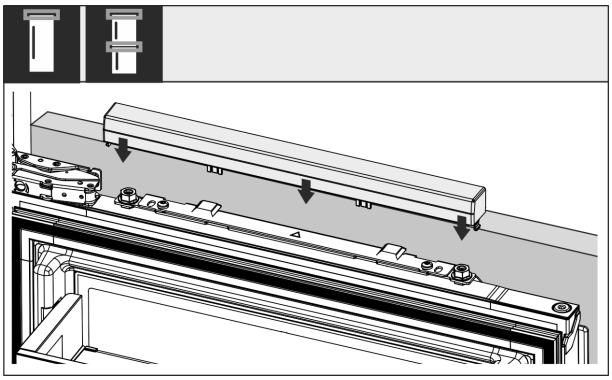

Fig. 70

▶ Put on the top cover.

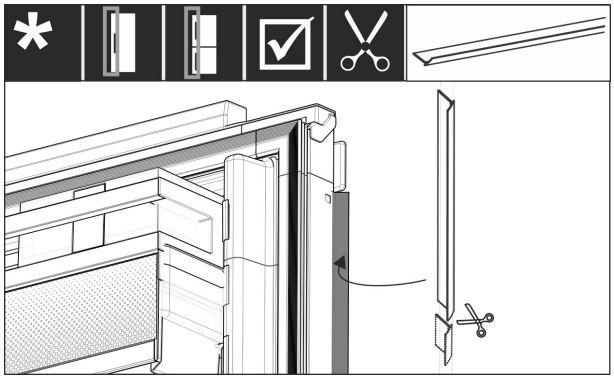

Fig. 71

▶ Cut the sealing strip to the required length.
▶ Insert the sealing strip between the front panel and the appliance door.

To make sure the appliance is correctly installed and there will not be any icing up, condensation or malfunctions, the following criteria apply:

- The door must close properly.
- The custom door panel must not touch the body of the unit.
- The seal on the upper corner on the handle side must be fitted securely.

▶ Check recess installation according to the criteria above.

18 Cabinet fronts

18.1 Dimensions

Depending on your model, you will need one or two cabinet doors. The size of the cabinet door(s) depends on the overall recess size and cabinet unit thickness.

Note
Observe the corresponding appliance and niche dimensions and installation sketches .

General requirements:

- Please note our appliance-specific recommendations on size and weight for fixed door installation (see 6 Custom panel weights) .
- The body of the unit should be at least 16 mm thick but not more than 19 mm.
- When mounting a 2-door cabinet door, observe the recommended clearances.*

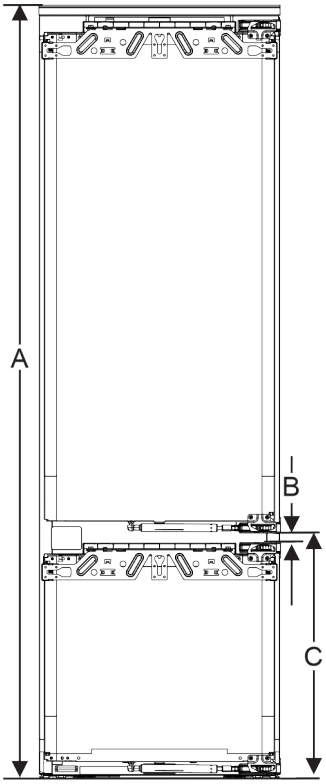

*Fig. 72 Clearances for a 2-door cabinet door**

Recess height 178-2 drawers*	
Appliance height (A) (mm)	1770
Distance (B) (mm)	15
Clearance (C) door-on-door (mm)	549 + 15

Recess height 178-3 drawers*	
Appliance height (A) (mm)	1770
Distance (B) (mm)	15
Clearance (C) door-on-door (mm)	695 + 15

Other cabinet door above, below or next to it:

- The vertical gap between custom panels must be 4 mm.
- The horizontal gap between custom panels must be 4 mm. Check the risk of them clashing here. (see 18.3 Setting the clearance to avoid collision)

Weight and hinges:

- With heavy furniture fronts, the stress on the hinge is very high. The hinge may be damaged. Please note the maximum weight specification for your appliance in the chapter Furniture front weights (see 6 Custom panel weights) .
- If the cabinet front exceeds the maximum permitted weight, an appliance with door-tracking device can help by loading the weight over several concealed hinges on the cabinet.
- If you use long unit fronts that protrude far above the appliances, we recommend an additional door hinge (e.g. Kamat), which must have the same pivot point as the fixed door hinge used with your appliance. By using another hinge (Kamat), the weight is shared over several points. The use of a milled compensating fastening is recommended for high unit fronts to counteract warping (convex/concave).

18.2 Mounting the cabinet front(s)

When installing, note:

- Cabinet front must be installed symmetrically to the refrigerator door.
- Adjoining cabinet front is exactly level.
- Adjoining cabinet front has the same edge radius as the front of the appliance.
- Cabinet front is flat and tension-free.
- The front panel has a minimum depth setting of approx. 2 mm to the body.

▶ Install the appliance in the recess. (see 17 Installing the appliance in the recess)
▶ Fasten the front panel to the appliance door. (see 17 Installing the appliance in the recess)
▶ Check that the front panel can close unobstructed. (see 18.3 Setting the clearance to avoid collision)

18.3 Setting the clearance to avoid collision

After installing the cabinet front(s), check that the cabinet fronts do not collide.

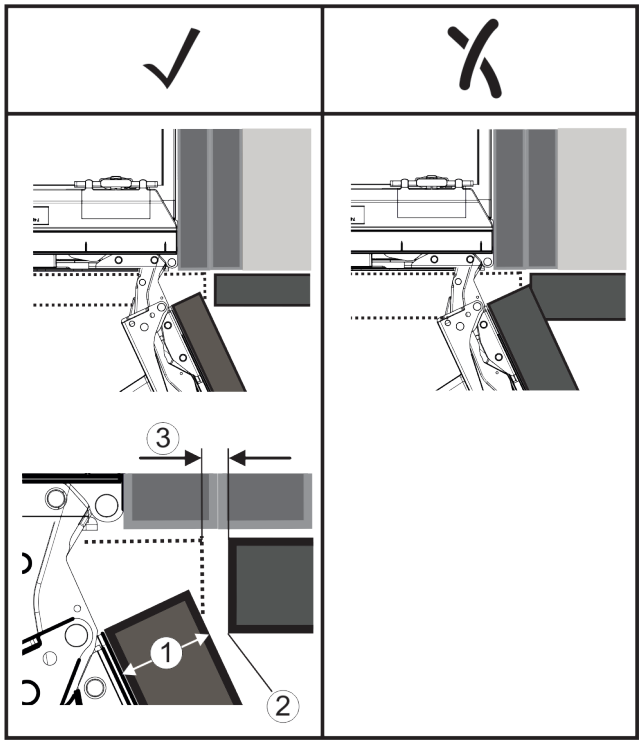

Fig. 73

(1) Front thickness (FD) **(3)** Clearance (S)
(2) Edge radius (R)

	R (2) = 0 mm		R = 1,2 mm		R = 2 mm		R = 3 mm	
FD(1) (mm)	Gmin	Gmax	Gmin	Gmax	Gmin	Gmax	Gmin	Gmax
16	0,3	0,9	0,1	0,4	0,1	0,2	0,1	0,2
19	0,7	2,4	0,3	1,9	0,23	3,25	0,1	0,8
20	2	4,3	1,5	3,6	1	3,1	0,6	2,7
22	3,5	6,3	3	5,6	2,6	5,3	2,1	4,6
24	5,5	8,3	5	7,8	4,5	7,4	4	6,9
26	7,6	10,7	7	10,3	6,6	9,9	6,2	9,4

Fig. 74 Table of clearance limits

G_{min} = min. clearance in mm

G_{max} = max. clearance in mm

Note
When making adjustments, always make sure that the cabinet front suits the general appearance.

Check the collision factors and adjust them accordingly:

▶ Determine the front thickness and edge radius.
▶ Refer to the table for the min./max. clearance dimensions.
▶ Check the clearance size against the table.
▶ Do one of the following depending on the measured clearance size.

Clearance	Description
$S > G_{max}$	If the clearance size is greater than the two limits, you do not need to make any adjustments.
$S < G_{min}$	If the clearance size is below the limits, you must increase it. Another option is to increase the edge radius.
$G_{min} \leq S \leq G_{max}$	If the clearance is between the two limits, you have to be careful. This will quickly lead to collisions.

19 Water tank*

The water tank of the InfinitySpring is located behind the bottom drawer in the fridge section or BioFresh compartment, depending on the device.*

19.1 Inserting the water tank

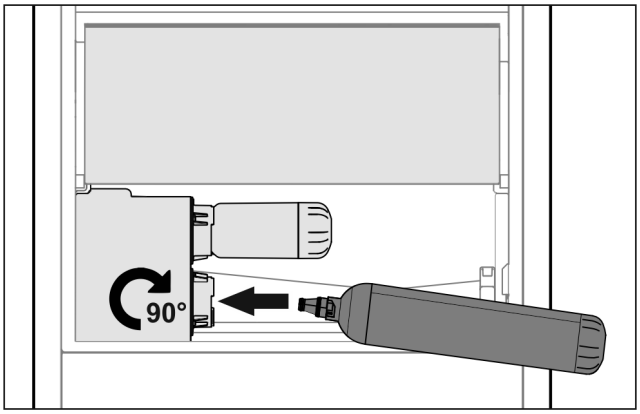

Fig. 75

▶ Remove the drawer compartment.
▶ Insert the water tank and rotate approx. 90° clockwise until it clicks in.
▶ Check that the tank is sealed and no water leaks out.
▶ Insert the drawer compartment.
▶ Bleed the water system. (see Quick Start Guide or operating instructions)

Instead of the water filter you can insert an additional water tank.*

Note
You can purchase this water tank as an optional extra.

20 Water filter*

Depending on your model, the water filter is behind the lowest drawer in the fridge or BioFresh compartment.*

It filters out deposits in the water and reduces the taste of chlorine.

❑ Replace the water filter at least every 6 months, or if there is a significant reduction in the flow rate.
❑ The water filter contains carbon and can be disposed of with the regular household waste.

Note
Water filters are available from the Liebherr-Hausgeräte store at home.liebherr.com/shop/de/deu/zubehor.html.

20.1 Inserting the water filter

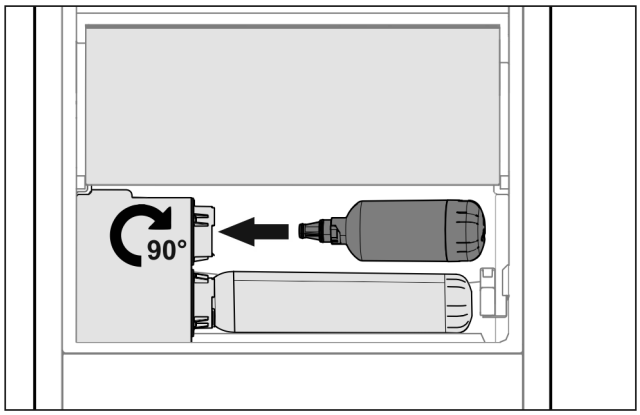

Fig. 76

▶ Remove the drawer compartment.
▶ Insert the water filter and rotate approx. 90° clockwise until it clicks in.
▶ Check that the filter is sealed and no water leaks out.
▶ Insert the drawer compartment.

Note
New water filters may contain suspended particles.*
▶ After replacing the filter: Draw and dispose of 3 l water at the InfinitySpring.

▷ The water filter is now ready for use.

21 Connecting the appliance to the power supply

WARNING
Danger of electric shock and injury due to damaged appliance or damaged mains cable!
Danger of cuts and fatal injuries. If the appliance or the mains cable is damaged during transport, you may be electrocuted. You could also cut yourself on damaged parts of the appliance housing.
▶ Check the appliance and the mains cable for damage after transport.
▶ Never put the appliance into operation if the appliance or the mains cable are damaged.
▶ Contact Customer Service.

You can connect your appliance to the mains using the power cable supplied separately. The mains power cable has an appliance coupler at one end and a mains plug at the other end.

Make sure that the following requirements are fulfilled:

- The appliance and power cable are undamaged.
- The appliance is installed in accordance with the regulations. (see 17 Installing the appliance in the recess)
- Requirements for the electrical connection are met.
- Dimensions for connection in accordance with regulations are known and observed.
- Mains voltage and frequency correspond to the specifications on the type plate.
- The socket is earthed according to the regulations and fused.
- The fuse tripping current is between 10 A and 16 A.
- The socket is easily accessible and is not behind the appliance. (see 4 Recess dimensions)

NOTICE
Danger of damage to incorrect operation!
Damage to the electrical components of the appliance.
▶ Only use the supplied mains cable.

WARNING
Danger of fire due to incorrect connection!
Burns.
Damage to the appliance.
▶ Do not use an extension cable.
▶ Do not use distributor blocks.

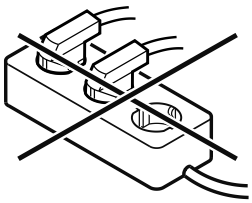

NOTICE
Danger of damage to incorrect connection!
Damage to the appliance.
▶ Do not connect the appliance to a stand-alone inverter, e.g. solar power systems and petrol generators.

▶ Connect the mains cable plug to the power supply. Ensure that the plug is tightly in the socket.
▷ The Liebherr logo appears in the display.
▷ The display switches to the standby symbol.
▷ If no action occurs within 60 seconds: The standby symbol fades or disappears.
▷ The appliance is connected. For information regarding first use, see the following section or the operating instructions.

home.liebherr.com/fridge-manuals

EN built-in fridges and freezers, fixed door

Issue date: 20251008

Part number index: 7088411-01

Liebherr-Hausgeräte GmbH
Memminger Straße 77-79
88416 Ochsenhausen
Deutschland

Installation instructions

Multi-temperature wine cabinet

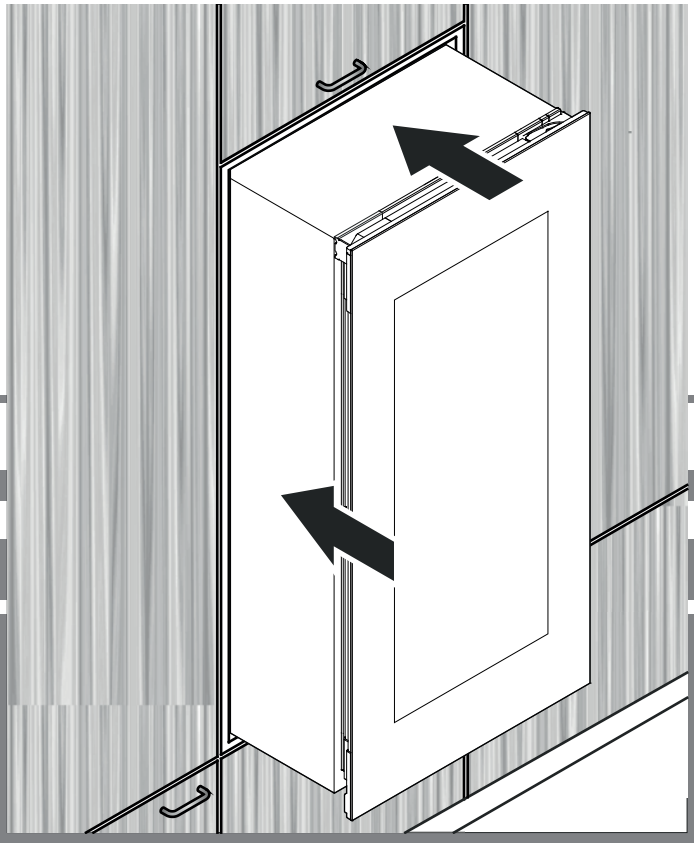

7085 665-03

EWTgb/gw 1683 / 2383 / 3583

LIEBHERR

Vinidor

Content

Scope of delivery 14
Appliance dimensions 14
Transporting the appliance 15
Installation dimensions 16
Appliance venting 16
Changing over door hinges 17
Installing the appliance 20
Adjusting the door 24

Scope of delivery

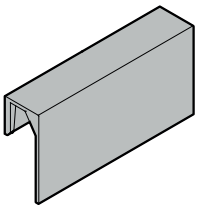

Labels
2 pc. - EWT 1683
4 pc. - EWT 2383
8 pc. - EWT 3583

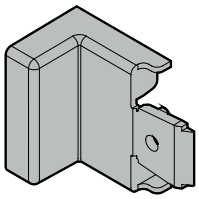

Cover

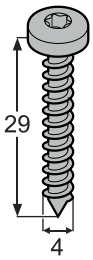

2 pc.

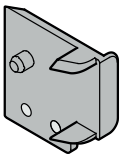

Spacer

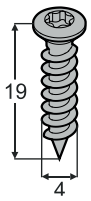

5 pc.

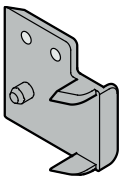

Spacer

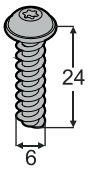

2 pc.

2 pc.

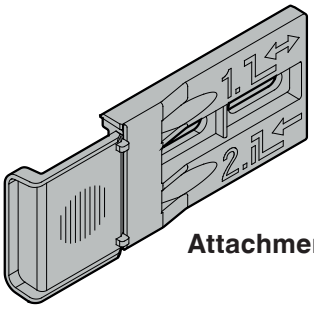

Attachment bracket

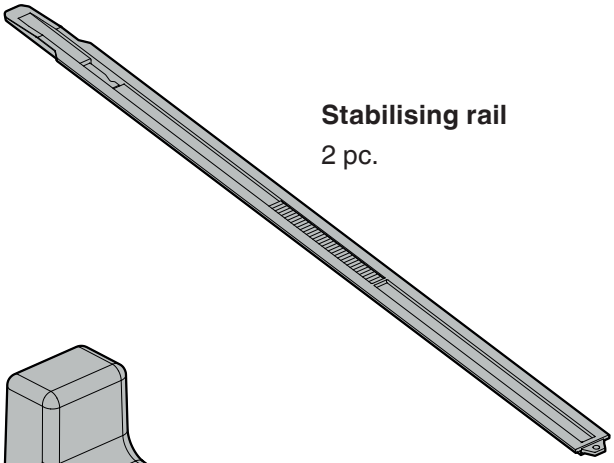

Stabilising rail
2 pc.

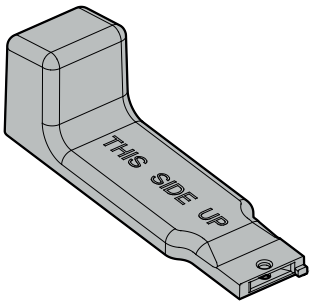

Stabilising rail handle

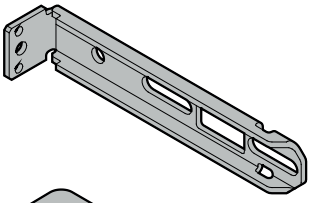

Attachment bracket

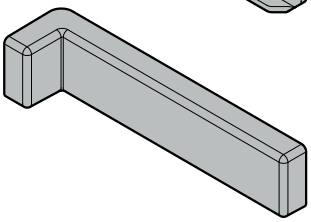

Cover

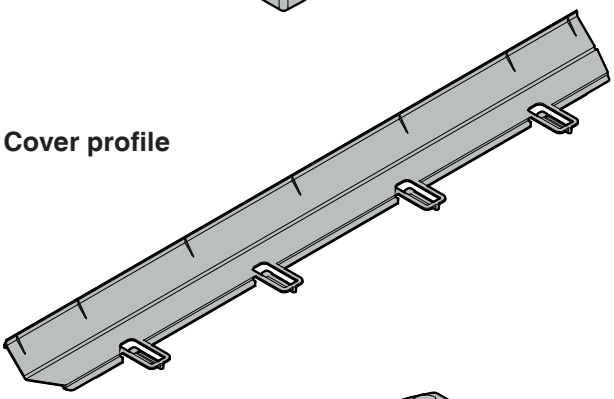

Cover profile

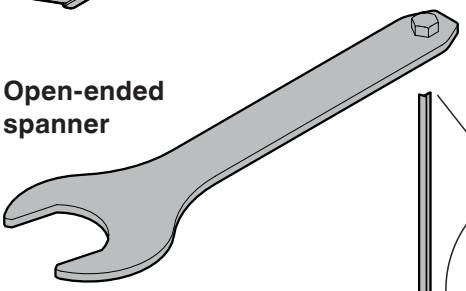

Open-ended spanner

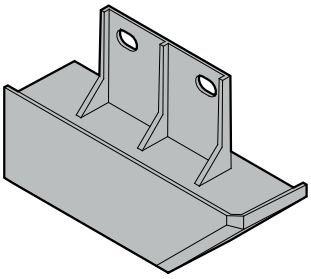

Cover

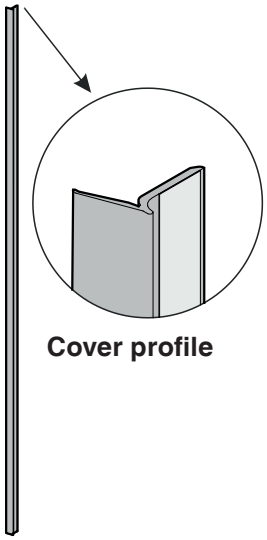

Cover profile

Appliance dimensions

A	510 mm
B	EWT 16.. - 906 mm EWT 23.. - 1233 mm EWT 35.. - 1816 mm
C	572 mm
D	EWT 16.. - 872 mm EWT 23.. - 1218 mm EWT 35.. - 1770 mm
E	595 mm
F	557 mm
G	254 mm
H	1100 mm
I	115°
J	EWT 16.. - 26.5 mm EWT 23.. - 7.5 mm EWT 35.. - 27 mm
K	EWT 16.. - 7.5 mm EWT 23.. - 7.5 mm EWT 35.. - 19 mm

Side view

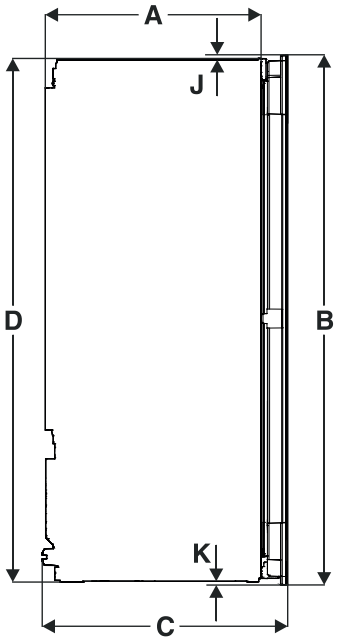

Front view

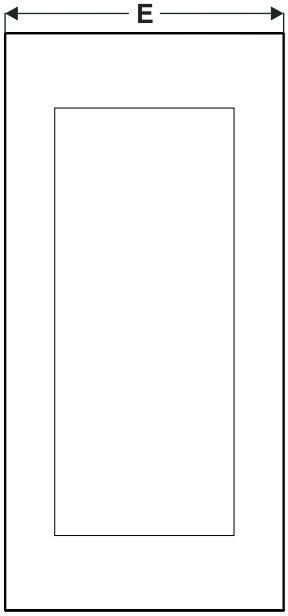

View from above

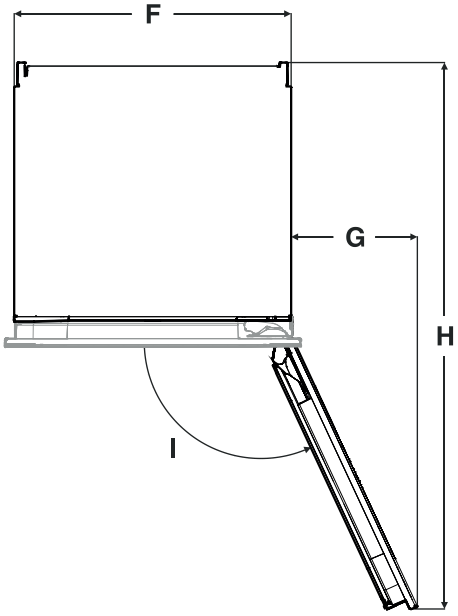

Transporting the appliance

⚠ CAUTION

Danger of injury or damage as a result of incorrect transport!

- Transport the appliance in a packed condition.
- Transport the appliance upright.
- Do not transport the appliance without assistance.

⚠ WARNING!

An appliance which has not been built in can topple over!

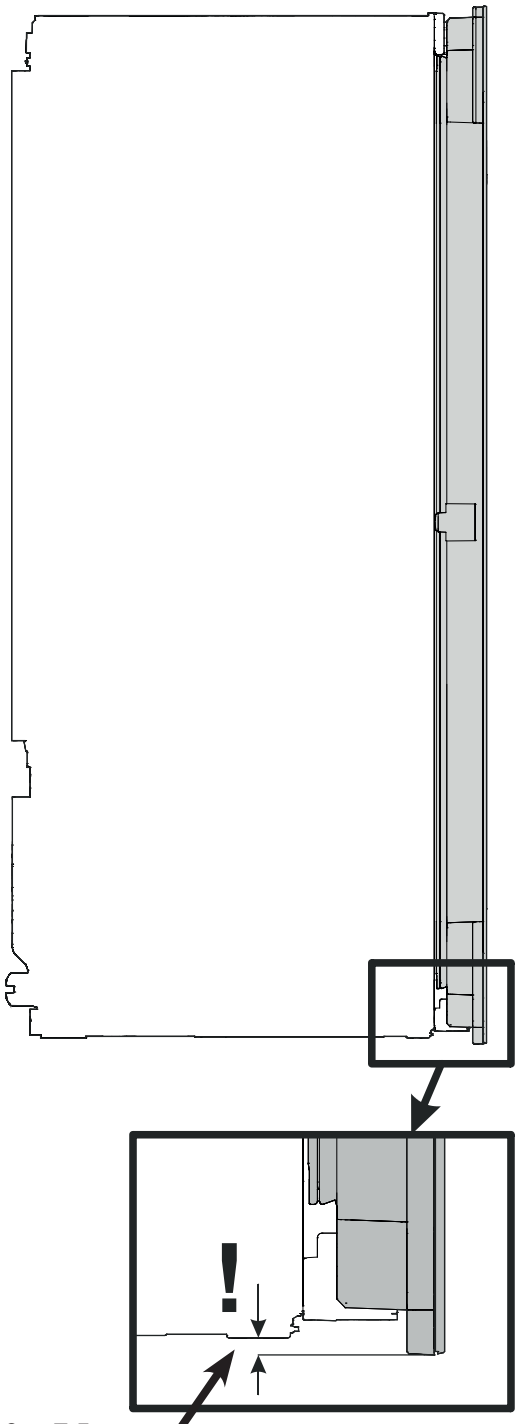

EWT 16.. - 7,5 mm
EWT 23.. - 7,5 mm
EWT 35.. - 19 mm

Installation dimensions

Important note

In order to avoid any problems when installing the appliance and to avoid damage to the appliance, the following conditions must be complied with.

The kitchen unit must be aligned horizontally and vertically!

Minimum wall thickness of the body of the unit = 16 mm.

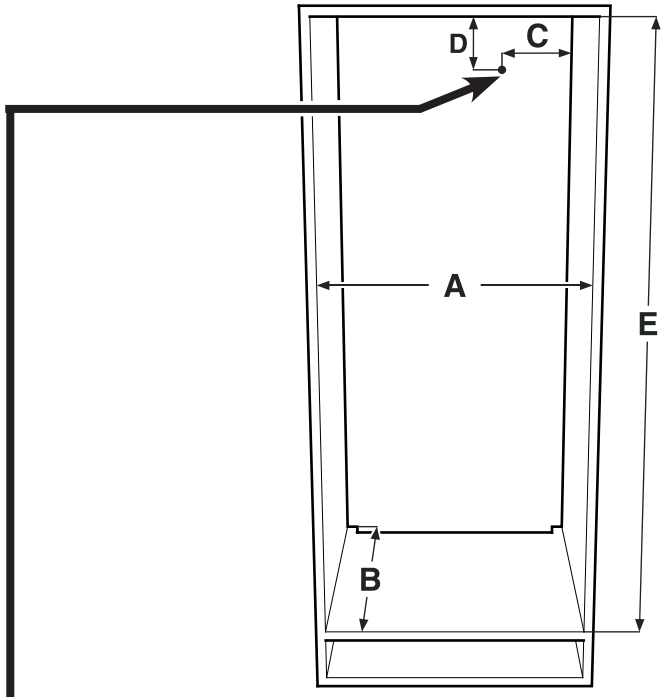

A	560 mm - 570 mm
B	min. 550 mm (recommended 560 mm)
C	70 mm
D	30 mm
E	EWT 16.. - 874-890 mm EWT 23.. - 1220-1236 mm EWT 35.. - 1772-1788 mm

In this area, the mains power cable comes out of the appliance rear.

Free length of the mains power cable:

EWT 16..: 2000 mm
EWT 23..: 2000 mm
EWT 35..: 2800 mm

Choose the position of the socket considering these specifications.

The socket must not be situated behind the appliance and must be easily accessible.

Appliance venting

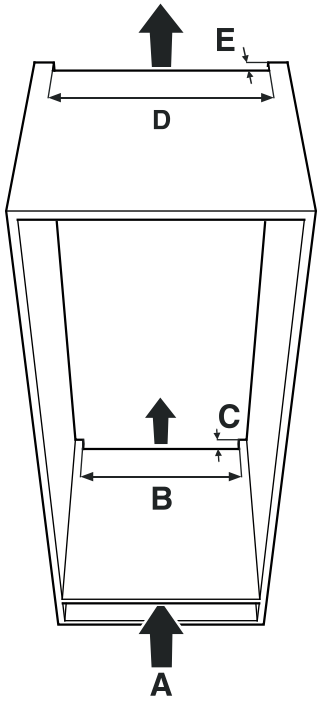

Important note

The clear ventilation cross-section must be at least 200 cm² from the lower ventilation opening right to the upper one.

A	min. 200 cm²
B	min. 500 mm
C	min. 40 mm
D	min. 500 mm
E	min. 40 mm

Types of air outlet

① Directly above the appliance

② Above the top unit

③ From the front of the top unit with decor grille

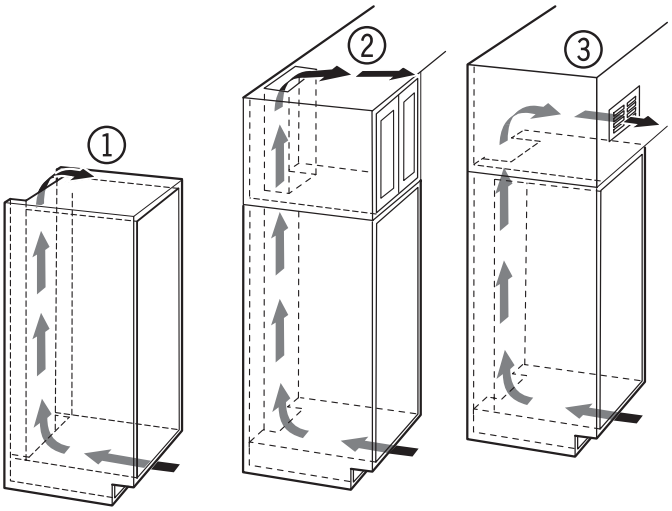

Important note

When using decor grilles, it must be taken into account that the clear ventilation cross-section corresponds to the sum of the individual openings in the grille.

A cut-out section of merely 200 cm² for installing the ventilation grille is thus not sufficient.

Changing over door hinges

Door hinges should only be changed by a trained expert.

Changing the door hinges must be done by two people.

⚠ WARNING!

High door weight.
Danger of injury and damage to property.
Only complete the modification work if you can lift a weight of 35 kg.

⚠ WARNING!

Risk of injury due to the door dropping out! If the fastening parts are not screwed into place firmly enough, the door may drop out. This may lead to severe injuries. What is more, the door may not close and therefore the appliance may fail to cool properly.

1. Remove covers.

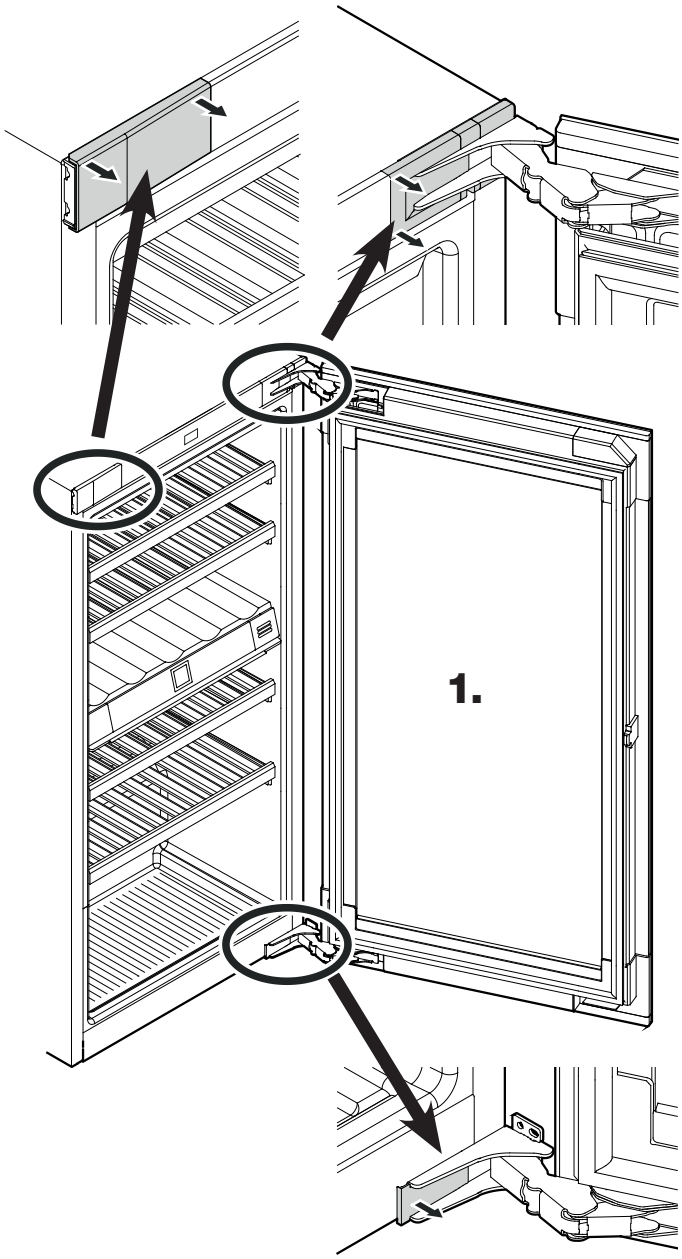

2. Remove the transportation safety component.

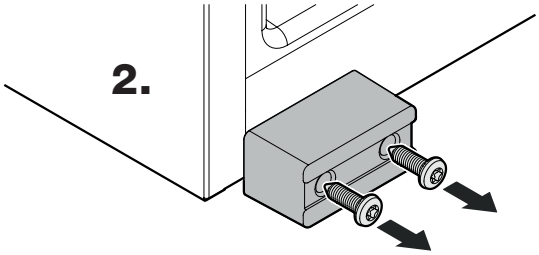

3. Remove seal.

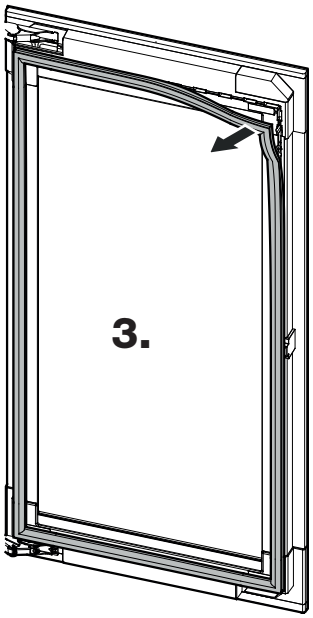

4. Remove cover.

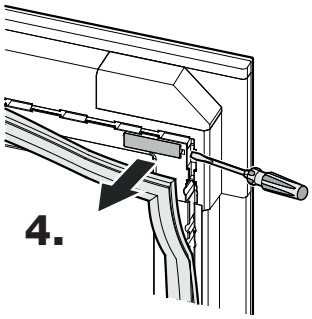

5. Remove cover.

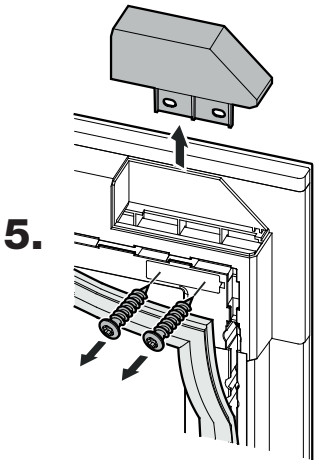

6. Remove seal.

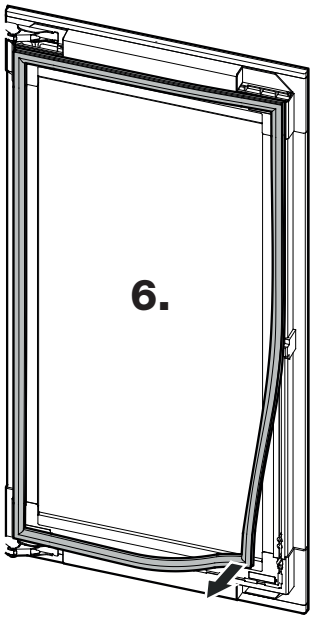

7. Remove cover.

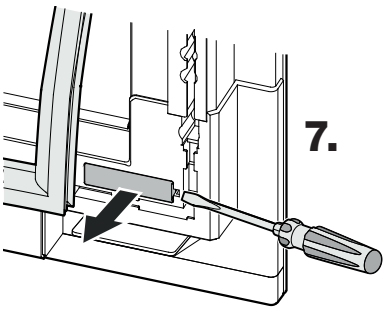

8. Remove the transportation safety component.

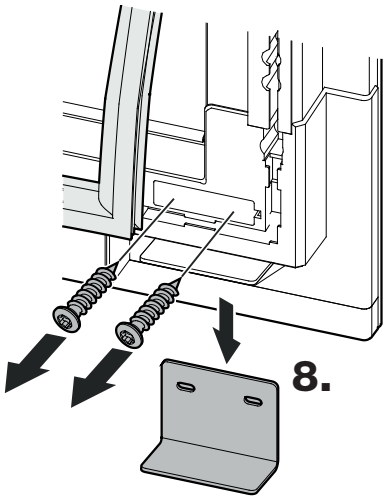

9. Remove the door.

The door must now be held secure by somebody.

Carefully place the door on a soft surface.

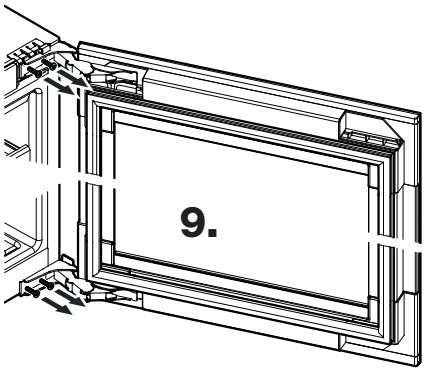

⚠ **CAUTION**

Risk of injury if hinges fold!

- Leave hinges open.

10. Remove the upper retaining bracket and transfer to the opposite side.

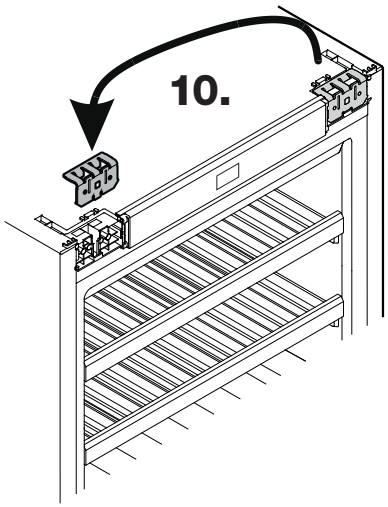

11. Transfer the stop to the opposite side.

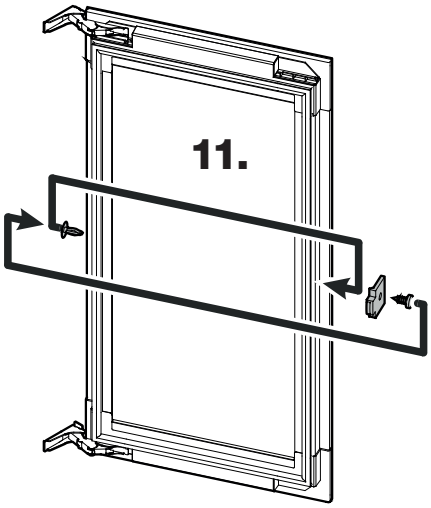

12. Remove seal.

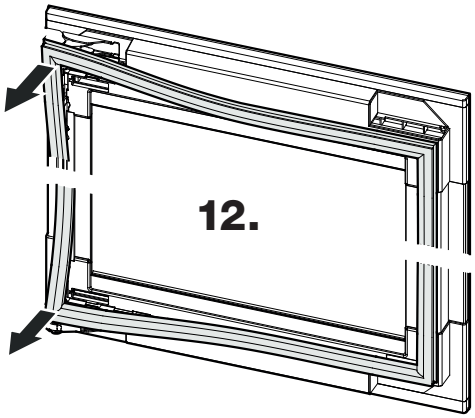

13. Remove covers.

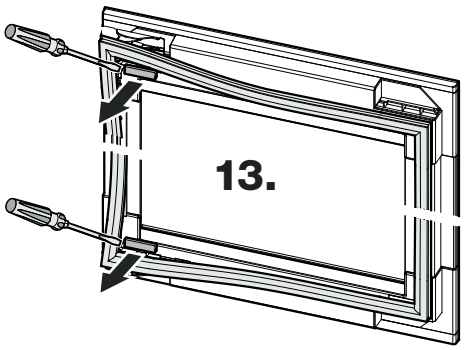

14. Unscrew hinges.

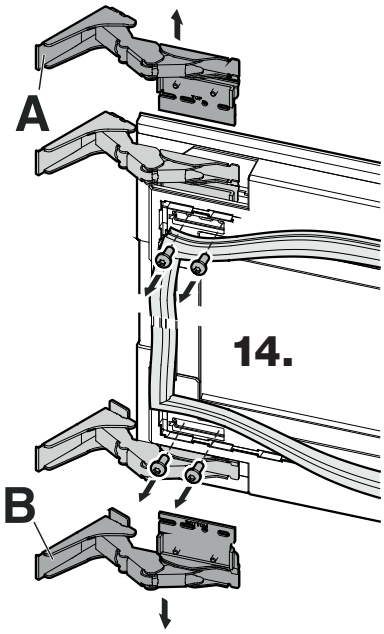

15. Unscrew the attachment plates from the hinges and resecure them to the other relevant hinge (the "Top" attachment plate must remain at the top + the "Bottom" attachment plate at the bottom). Re-fit the hinges on the opposite side of the door at diagonals to the original position.

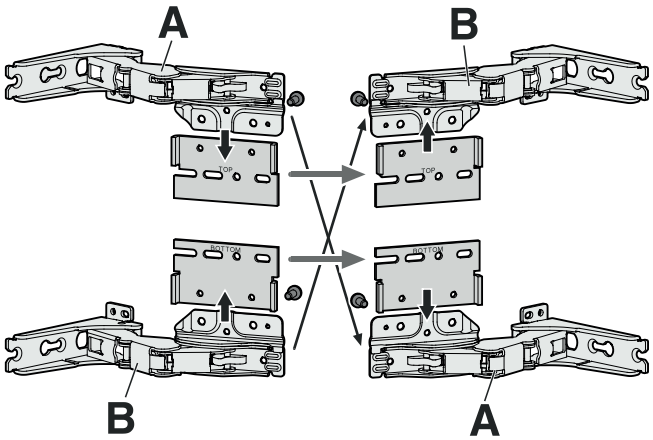

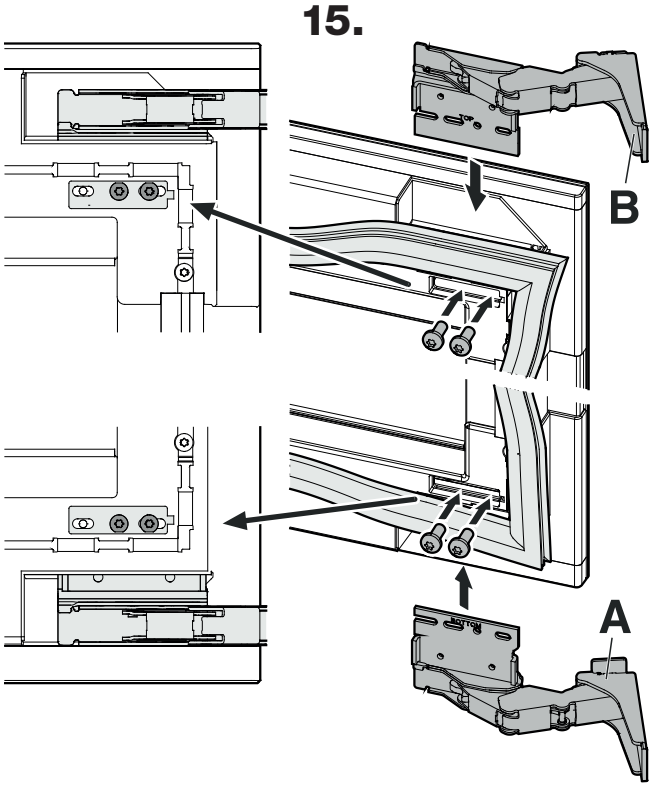

16. Screw on covers.

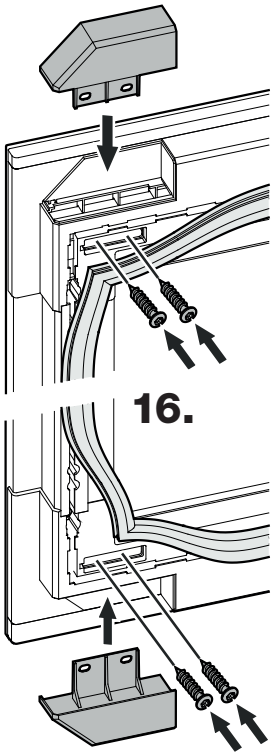

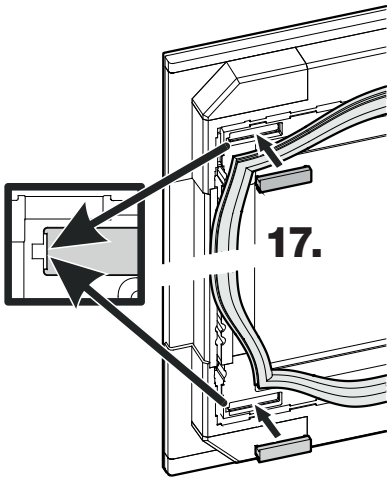

17. Fit the covers.

18. Fit seal.

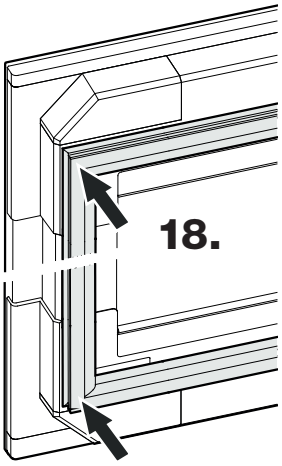

19. Fit the covers.

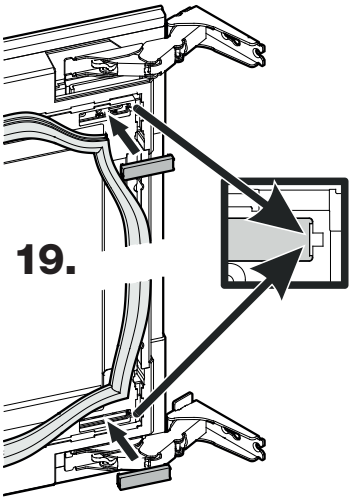

20. Fit seal.

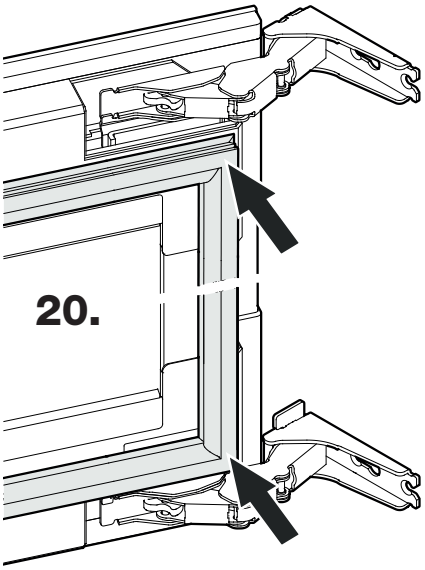

21. Fit the door on the appliance.

Notice
The door must now be held secure by somebody.

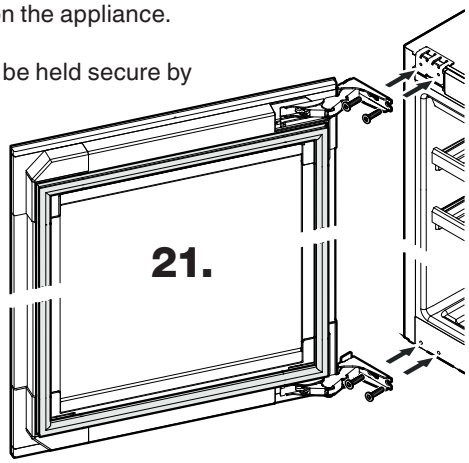

22. Fit covers and click into place.

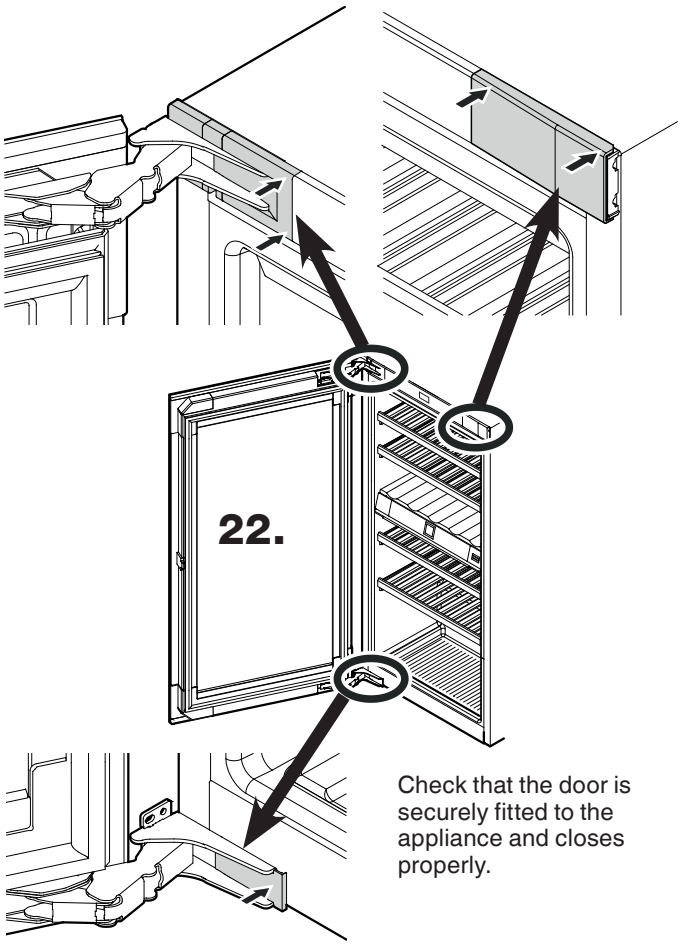

Check that the door is securely fitted to the appliance and closes properly.

Installing the appliance

The installation work should only be carried out by trained personnel.

Two people are required for the installation work.

Note
Check the installation dimensions before installation.
The intermediate panel and side wall of the kitchen unit must be perpendicular to each other.

⚠ WARNING!

Fire hazard due to dampness!

If live parts or the mains power cable become damp this may cause short circuits.

- The appliance is designed for use in enclosed areas. Do not operate the appliance outdoors or in areas where it is exposed to splash water or damp conditions.

- Only use the appliance when it is installed.

1. EWT 3583 - Remove the transportation safety component.

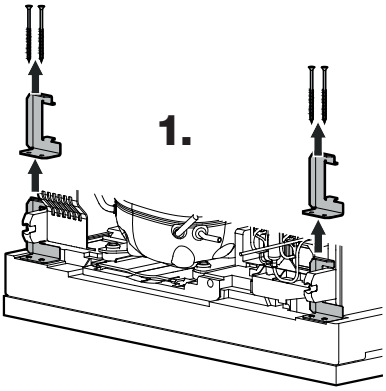

2. Route the mains cable towards the socket.

⚠ WARNING!

Fire hazard from short-circuiting!

- When pushing the appliance into the recess, take care not to crush, jam or damage the mains power cable.

- Do not operate the appliance with a defective mains power cable.

3. Slide the appliance two-thirds of the way into the kitchen unit.
When sliding in the appliance, make sure that the mains cable is not damaged.

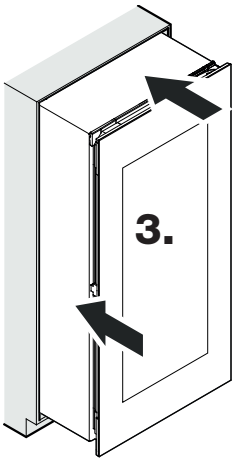

4. Screw in the adjustable feet as far as they will go.

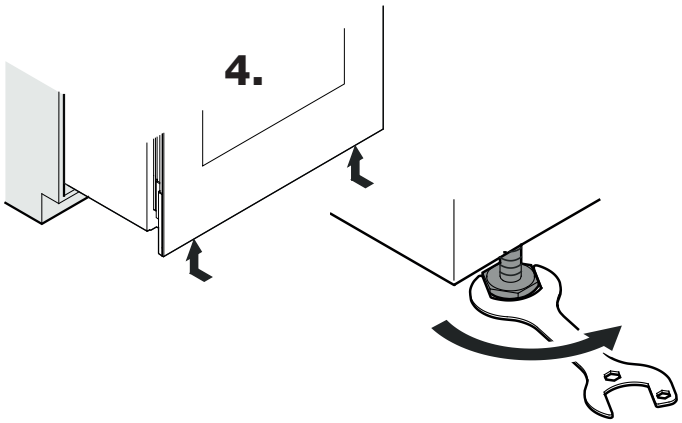

5. Fit cover profile.

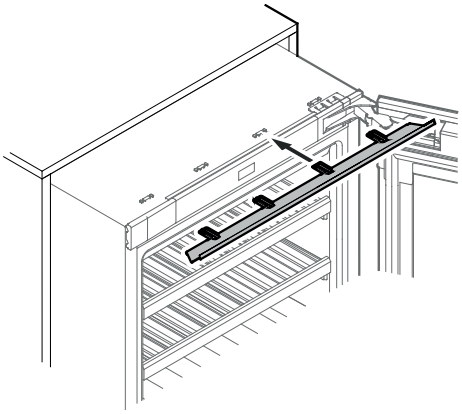

On appliances with hinges on the left

On appliances with hinges on the right

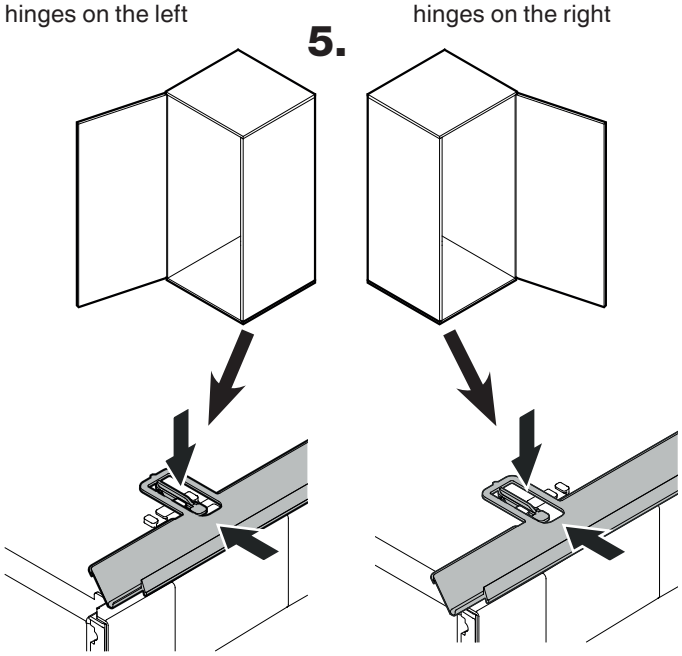

6. Remove the transportation safety component.

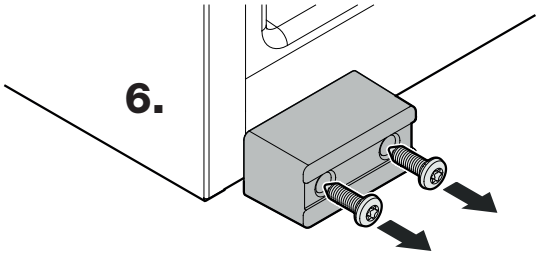

7. Only if the wall thickness is less than 19 mm:
Fit the spacers.

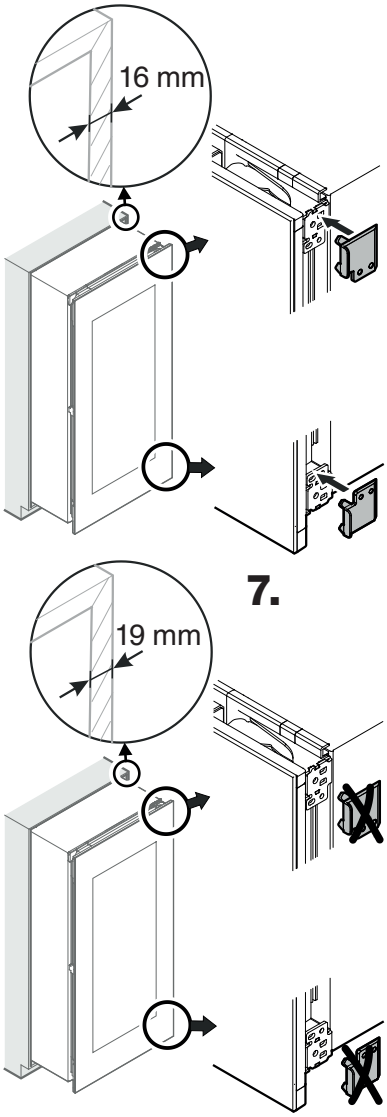

8. Remove cover.

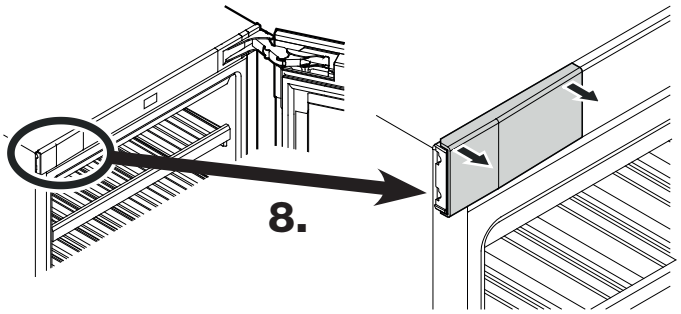

9. Screw on the attachment bracket.

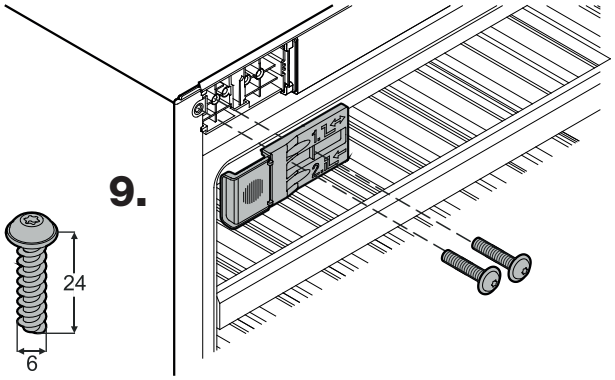

10. Screw on the attachment bracket.

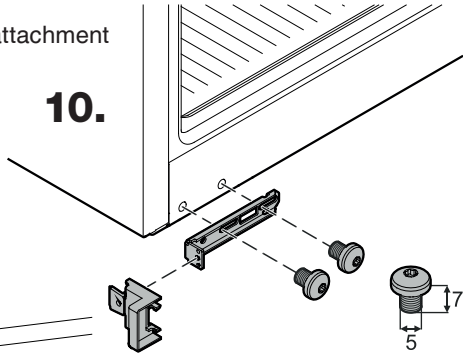

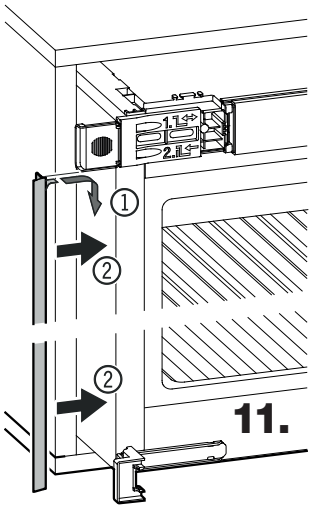

11. Fit cover profile.

12. Remove edge protection.

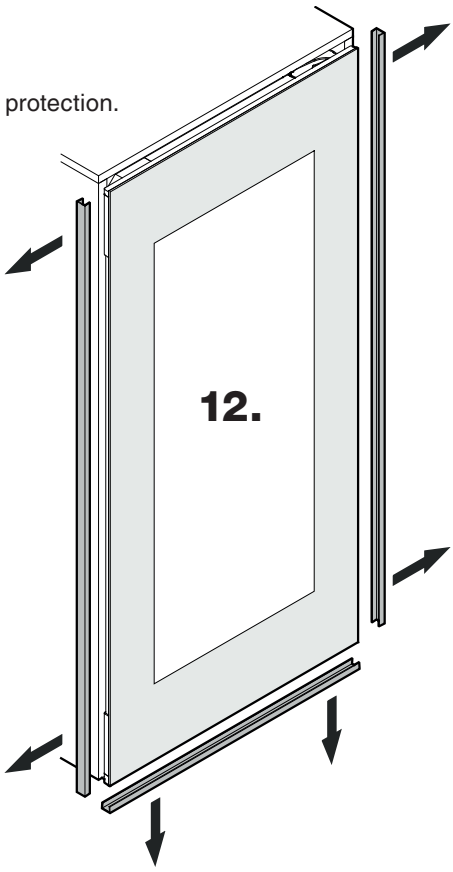

13. Slide the appliance fully into the recess.
Check that the distance is identical all the way round.

- Undo the screws ①.
- Slide bracket towards the unit wall.
- Tighten the screws ①.

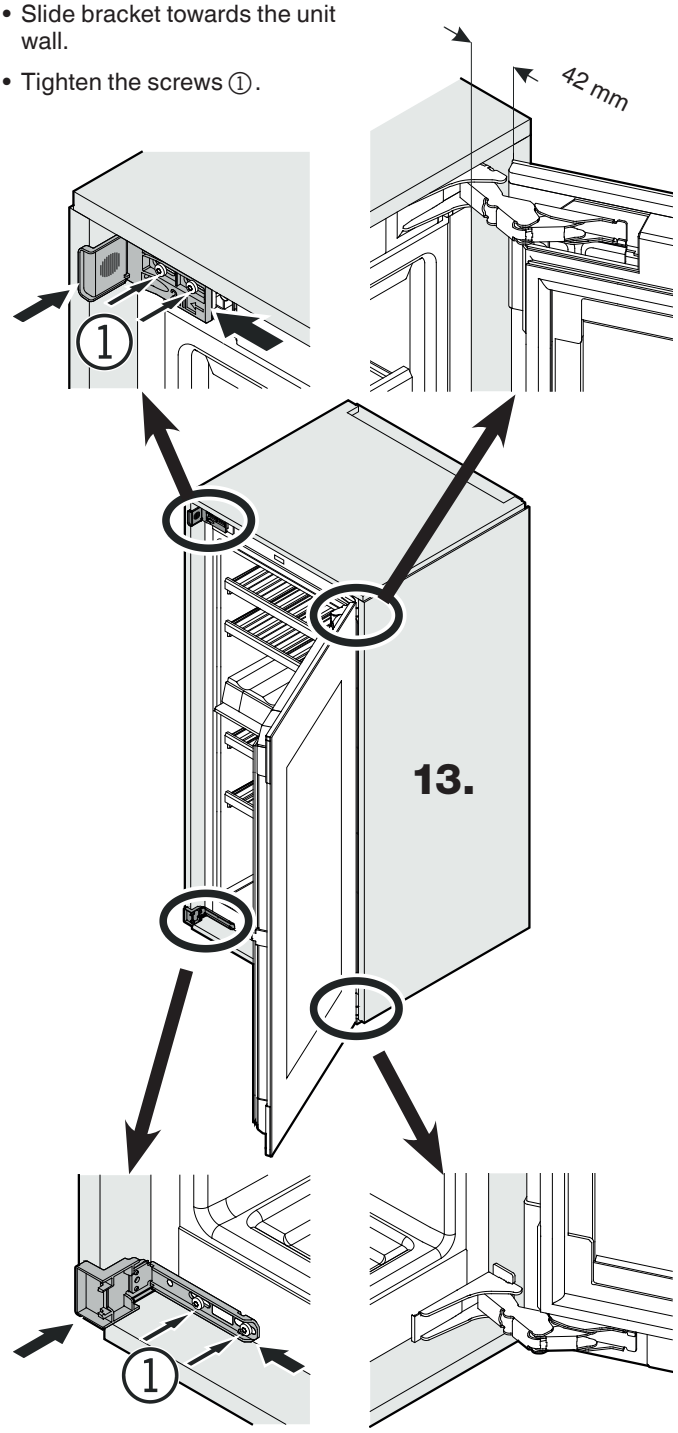

14. Adjust appliance via the adjustable feet, see section entitled "Adjusting the door", page 24.

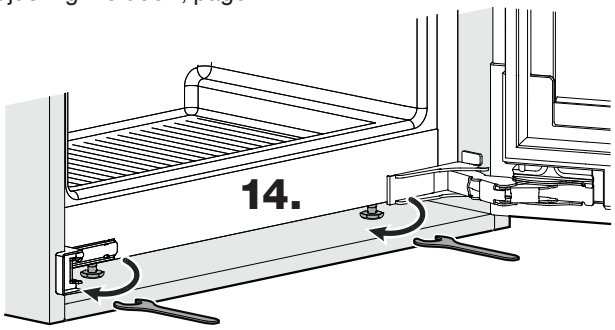

15. Secure the appliance to the kitchen unit using screws through the hinges and attachment brackets.

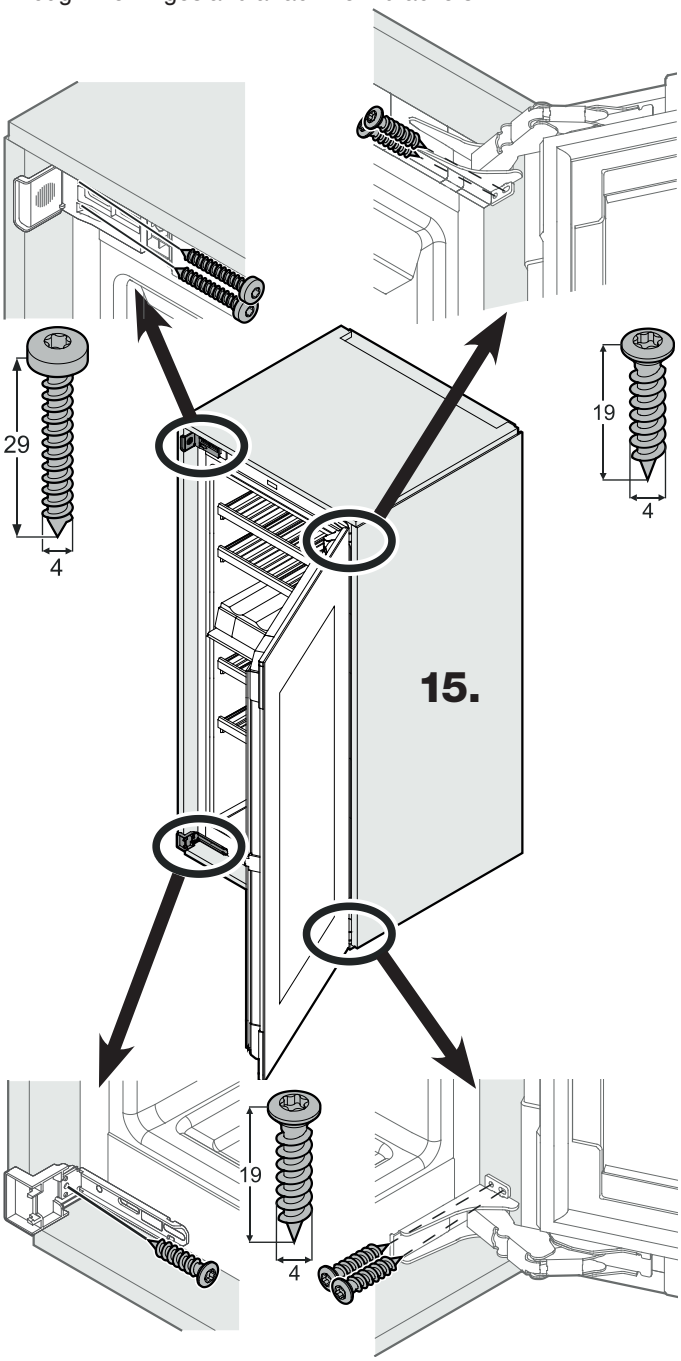

16. Snap off and remove the front part of the stop bracket.

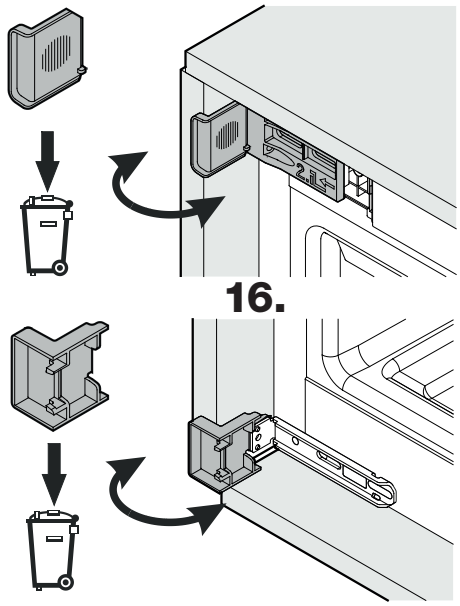

17. Fit the covers.

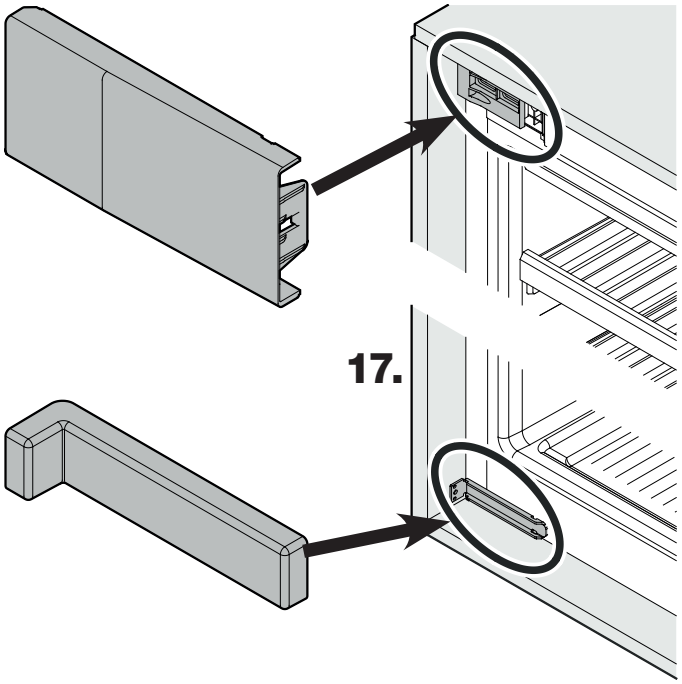

18. Stabilise the appliance at the back at the bottom:

Fit the handle ① to the stabilising rail ② and slide the stabilising rail into the floor of the appliance.

Remove the handle and repeat this procedure with the second stabilising rail.

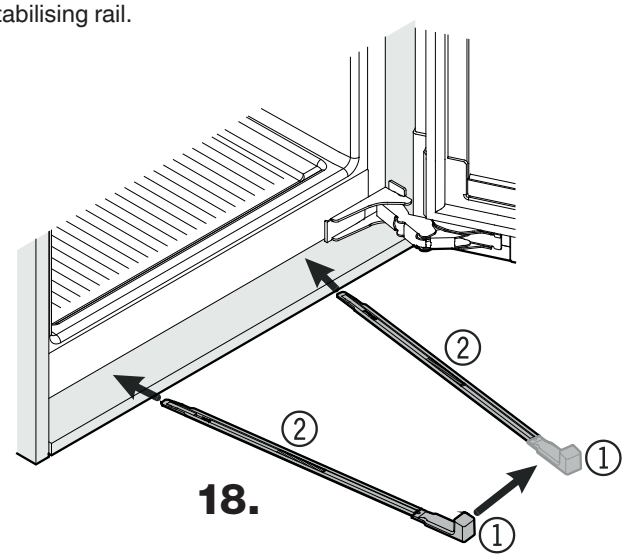

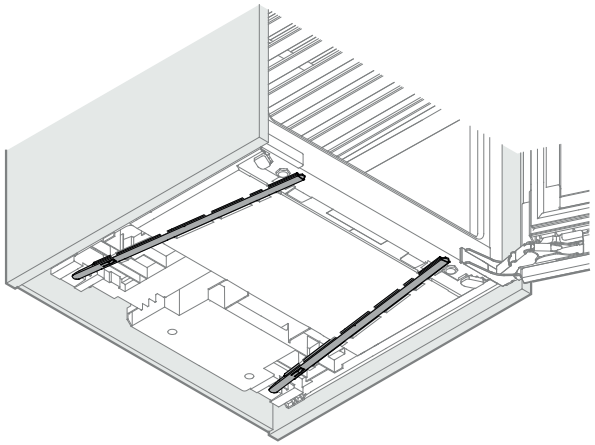

19. Remove seal.

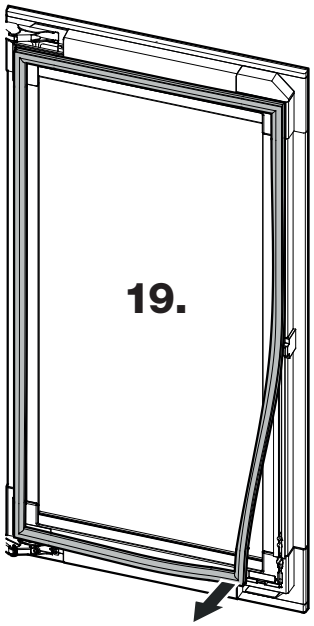

20. Remove cover.

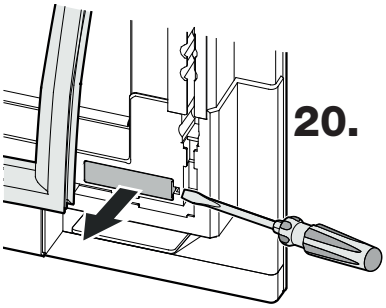

21. Remove the transportation safety component.

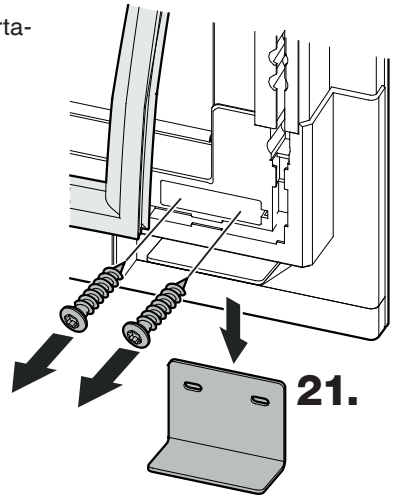

22. Screw on the cover.

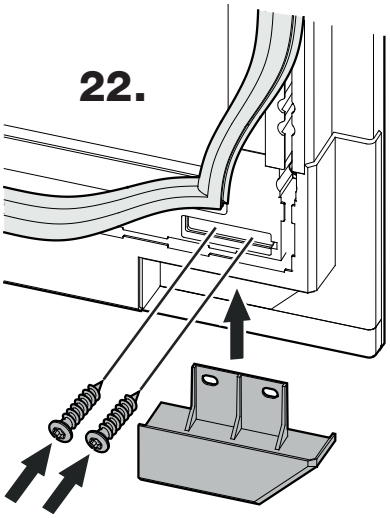

23. Fit cover.

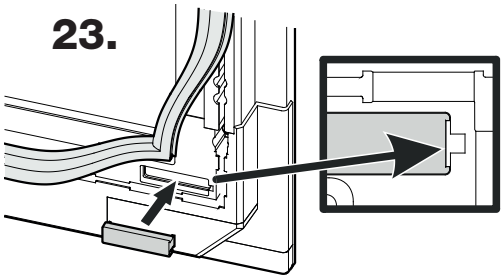

24. Fit seal.

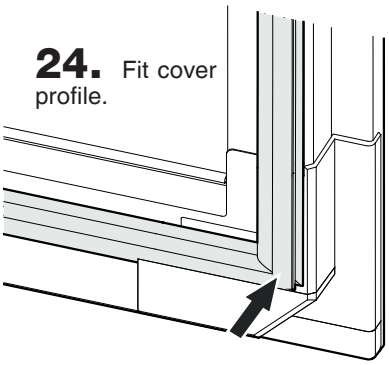

Check that the door is securely fitted to the appliance and closes properly.

Installation is now complete.

Adjusting the door

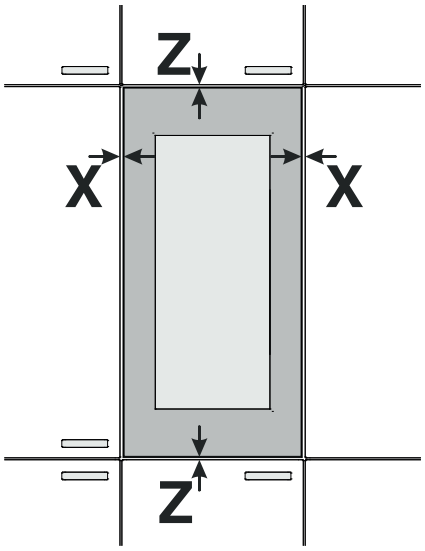

1. Remove seal.

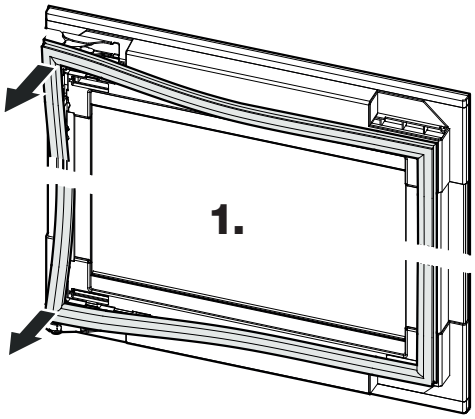

2. Remove covers.

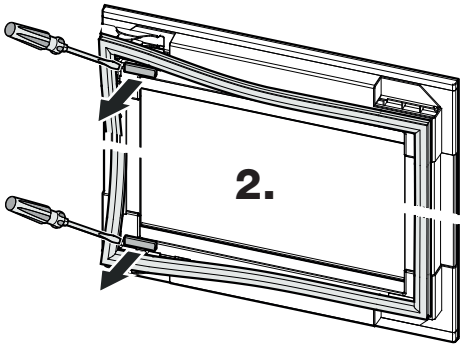

3.

- Remove screws ①.
- Transfer to position ②.
- Undo screws ③.
- Adjust clearance.
- Tighten screws ① and ③.

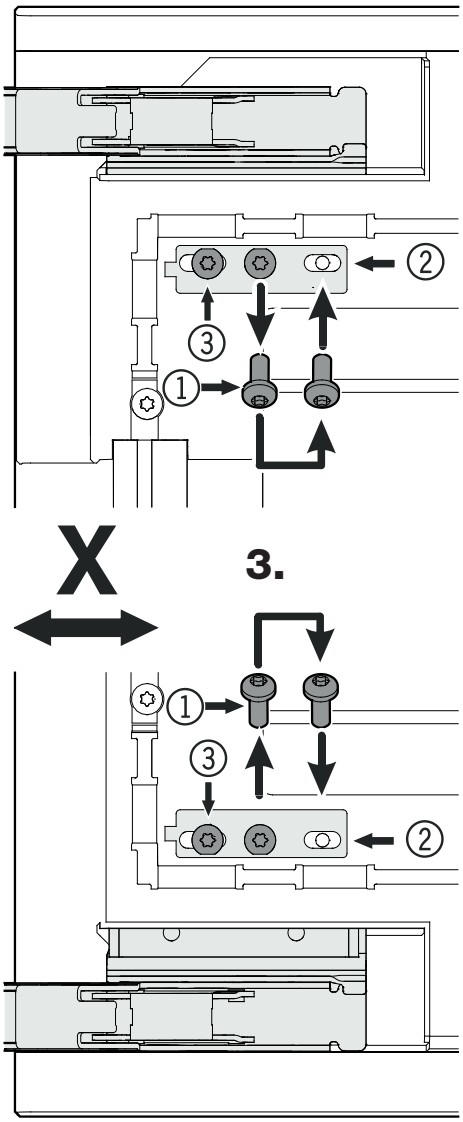

4. Fit the covers.

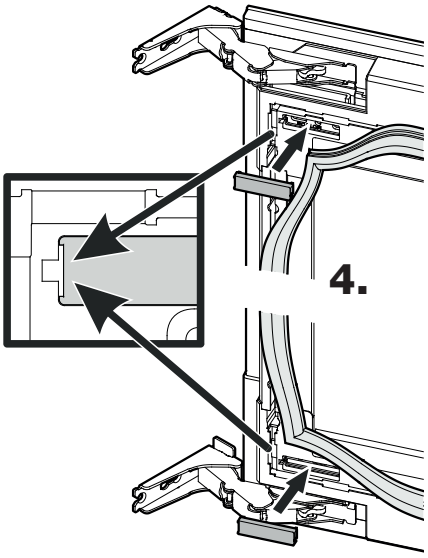

5. Fit seal.

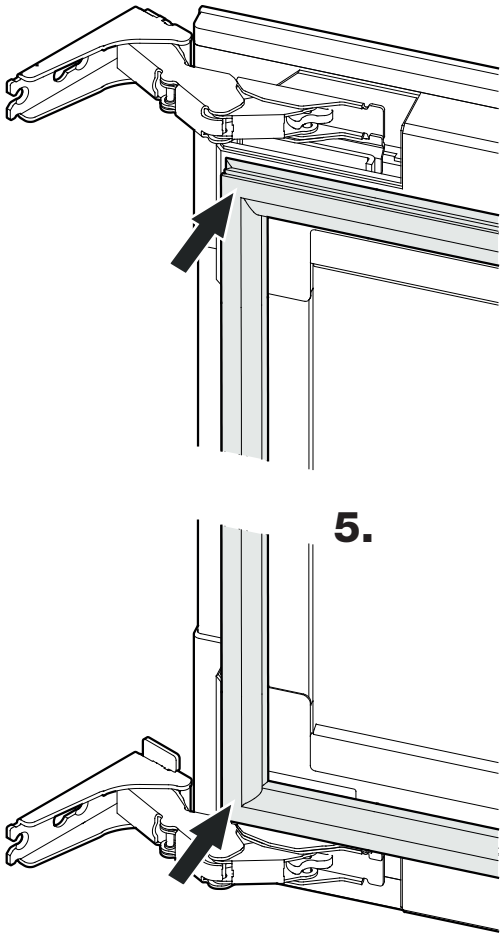

6. Adjust the clearance in Z direction.

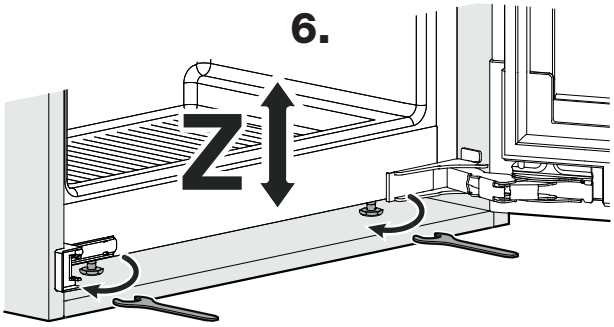

Liebherr Hausgeräte Lienz GmbH
Dr.-Hans-Liebherr-Strasse 1
A-9900 Lienz
Österreich
www.liebherr.com