User Guide

Quality, Design and Innovation

home.liebherr.com/fridge-manuals

LIEBHERR

Contents

1 General safety instructions ... 3

2 Appliance at a glance ... 4
2.1 Scope of delivery ... 4
2.2 Overview of the appliance and equipment ... 4
2.3 SmartDevice ... 4
2.4 Appliance range of use ... 5
2.5 Conformity ... 5
2.6 Spare parts ... 5

3 Functionality of the Touch & Swipe display ... 5
3.1 Navigation and symbol explanation ... 5
3.2 Menus ... 6
3.3 Sleep mode ... 6

4 Putting into operation ... 6
4.1 Switching on appliance (first use) ... 6
4.2 Starting the HydroBreeze for the first time ... 7

5 Storage ... 7
5.1 Information regarding storage ... 7
5.2 Fridge compartment ... 7
5.3 BioFresh ... 7
5.4 Storage times ... 8

6 Saving energy ... 9

7 Controls ... 9
7.1 Controls and displays ... 9
7.1.1 Status display ... 9
7.1.2 Display symbols ... 9
7.2 Appliance functions ... 9
7.2.1 Notes on the appliance functions ... 9
Switching the appliance off and on ... 9
WiFi ... 10
Temperature ... 11
Temperature unit ... 11
BioFresh B-Value ... 11
D-Value ... 12
SuperCool ... 12
PartyMode ... 12
HolidayMode ... 13
SabbathMode ... 13
EnergySaver ... 14
HydroBreeze ... 14
CleaningMode ... 15
Display brightness ... 15
Door alarm ... 15
Input lock ... 16
Language ... 16
Device information ... 16
Software ... 17
Reminder ... 17
Demo mode ... 17
Resetting to factory settings ... 18
7.3 Messages ... 18
7.3.1 Overview of warnings ... 18
7.3.2 Ending warnings ... 18
7.3.3 Overview of reminders ... 19
7.3.4 Ending reminders ... 19

8 Features ... 19
8.1 Door rack ... 19
8.2 Shelves ... 21
8.3 Dividing shelf ... 21
8.4 VarioSafe ... 21
8.5 Adjustable bottle shelf ... 24
8.6 Drawers ... 24
8.7 Compartment lid for Fruit & Vegetable Safe ... 25
8.8 HydroBreeze ... 26
8.9 Butter dish ... 27
8.10 Egg rack ... 27
8.11 Bottle holder ... 27
8.12 FlexSystem ... 27
8.13 FlexCube ... 28

9 Maintenance ... 28
9.1 FreshAir carbon filter ... 28
9.2 Dismantling the door rack ... 29
9.3 Assembling the door rack ... 30
9.4 Disassembling / assembling pull-out systems ... 30
9.5 Removing / inserting the variable bottle rack ... 30
9.6 Compartment lid for Fruit & Vegetable Safe ... 31
9.7 Defrosting the appliance ... 31
9.8 Cleaning the appliance ... 32

10 Customer help ... 32
10.1 Technical specifications ... 32
10.2 Operating noises ... 32
10.3 Technical fault ... 33
10.4 Customer Service ... 34
10.5 Model plate ... 34

11 Shutting down ... 34

12 Disposal ... 34
12.1 Preparing appliance for disposal ... 34
12.2 Disposing of the appliance in an environmentally friendly manner ... 35

The manufacturer is continually working on the further development of all types and models. Please be aware that we reserve the right to make changes to the shape, equipment and technology.

Symbol	Explanation
	Read instructions Please read the information in these instructions carefully to understand all of the benefits of your new appliance.

*** Depending on model and options**

Symbol	Explanation
	Additional information on the Internet The digital manual with additional information can be found via the QR code on the front of the manual or by entering the service number at **home.liebherr.com/fridge-manuals**. The service number can be found on the serial tag: 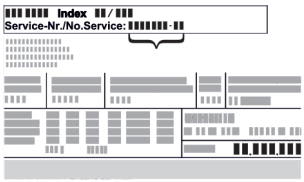 *Fig.* Example illustration
	Check appliance Check all parts for transport damage. If you have any complaints, please contact your agent or customer service.
	Differences These instructions apply to a range of models, so differences are possible. Sections that apply to certain models only are marked with an asterisk (*).
	Instructions and results Instructions are marked with a ▶. Results are marked with a ▷.
	Videos Videos about the appliances are available on the YouTube channels of Liebherr-Hausgeräte.

Open source licences:

The appliance contains software components that use open source licences. Information on the open source licences used can be found here: **home.liebherr.com/open-source-licences**

These operating instructions apply to:

IRBh	5170

1 General safety instructions

Please keep these instructions in a safe place and pass them on to any subsequent owners.

Read these operating instructions carefully before use to ensure safe and correct use of the appliance. Follow the instructions, safety instructions and warning messages included at all times. They are important for ensuring you can operate and install the appliance safely and without any problems.

Danger for the user:

- This device can be used by children and people with impaired physical, sensory or mental abilities or with a lack of experience and knowledge provided that they are supervised or have received instruction in the safe use of this device, and about the resulting hazards.
  Children must not play with this appliance. Cleaning and user maintenance work must not be carried out by children without adult supervision. Children aged between 3 and 8 are allowed to load and unload the appliance. Children below the age of 3 must be kept away from the appliance unless they are under continuous adult supervision.
- The socket must be easily accessible so that the appliance can be disconnected quickly from the electricity in an emergency. It must not be located in the area behind the appliance.
- When disconnecting the appliance from the supply, always take hold of the plug. Do not pull the cable.
- In the event of a fault pull out the mains plug or deactivate the fuse.
- Do not damage the mains power cable. Do not operate the appliance with a defective mains power cable.
- If the supply cord is damaged, it must be replaced by a special cord or assembly available from the manufacturer or its service agent.
- Only customer service or other specially trained staff may repair or perform other operations on the appliance.
- Only install, connect and dispose of the appliance according to the instructions.
- Only use the appliance when is installed.
- Special lights, such as LED lights on the appliance, are used to illuminate the interior of the appliance and are not suitable for room lighting.

Fire hazard:

- This appliance contains a refrigerant which is environmentally friendly, but flammable. Leaking refrigerant may ignite. It is hazardous for anyone other than an Authorised Service Person to service this appliance. In Queensland, the authorised Service Person MUST hold a Gas Work Authorisation for hydrocarbon refrigerants, to carry out Servicing or repairs where the gas system is being opened or charged.
- The coolant used (information on the model plate) is ecofriendly but also flammable. Any leaking coolant may ignite.
  - Do not damage the refrigerant circuit pipes.
  - Do not handle ignition sources inside the appliance.
  - Do not use electrical appliances inside the appliance (e.g. steam cleaners, heaters, ice cream makers, etc.).
  - If the refrigerant leaks: remove any naked flames or ignition sources from the vicinity of the leakage point. Properly air the room. Inform customer services.
- Do not store explosives or sprays using combustible propellants such as butane, propane, pentane, etc. in the appliance. To identify these spray cans, look for the list of contents printed on the can, or a flame symbol. Gases possibly escaping may ignite due to electrical components.
- Keep burning candles, lamps and other items with naked flames away from the appliance so that they do not set the appliance on fire.
- **WARNING:** Keep ventilation openings, in the appliance enclosure or in the built-in structure, clear of obstruction.
- **WARNING:** Do not use mechanical devices or other means to accelerate the defrosting process, other than those recommended by the manufacturer.
- **WARNING:** Do not damage the refrigerant circuit.
- Please be sure to store alcoholic drinks or other packaging containing alcohol in tightly closed containers. Any alcohol that leaks out may be ignited by electrical components.

Danger of tipping and falling:

- Do not misuse the plinth, drawers, doors etc. as a step or for support. This applies particularly to children.

Danger of food poisoning:

- Do not consume food which has been stored too long.

Danger of frostbite, numbness and pain:

- Avoid prolonged skin contact with cold surfaces or refrigerated/frozen goods or take protective measures, e.g wear gloves.
- Do not consume ice cream, water ice or ice cubes immediately and do not consume them too cold.

Danger of injury and damage:

- Hot steam can lead to injury. Do not use electrical heating or steam cleaning equipment, open flames or defrosting sprays to defrost.
- Do not use sharp implements to remove the ice.

Risk of crushing:

- Do not hold the hinge when opening and closing the door. Fingers may get caught.

Symbols on the appliance:

This symbol may be located on the compressor. It relates to the oil in the compressor and makes reference to the risk that: Swallowing or inhaling can be fatal. This advice is only relevant to recycling. There is no danger in normal operation.

This symbol is located on the compressor and indicates the danger of flammable materials. Do not remove the sticker.

This or a similar sticker may be located on the rear of the appliance. This sticker indicates that there are vacuum insulation panels (VIP) or perlite panels in the door and/or housing. This advice is only relevant to recycling. Do not remove the sticker.

Please note the warning messages and other specific advice in the other chapters:

	DANGER	indicates an immediately hazardous situation which will lead to death or serious injuries if it is not avoided.
	WARNING	indicates a hazardous situation which may lead to death or serious injuries if it is not avoided.
	CAUTION	indicates a hazardous situation which may lead to minor or moderate injuries if it is not avoided.
	NOTICE	indicates a hazardous situation which may lead to damage to property if it is not avoided.
	Note	indicates useful instructions and tips.

2 Appliance at a glance

2.1 Scope of delivery

Check all parts for transport damage. Contact your dealer or customer service in the event of complaints. (see 10.4 Customer Service)

Your new appliance comes with the following parts:

- Built-in appliance
- Features (depending on the model)
- Installation materials (depending on the model)
- “Quick Start Guide”
- “Installation Guide”

2.2 Overview of the appliance and equipment

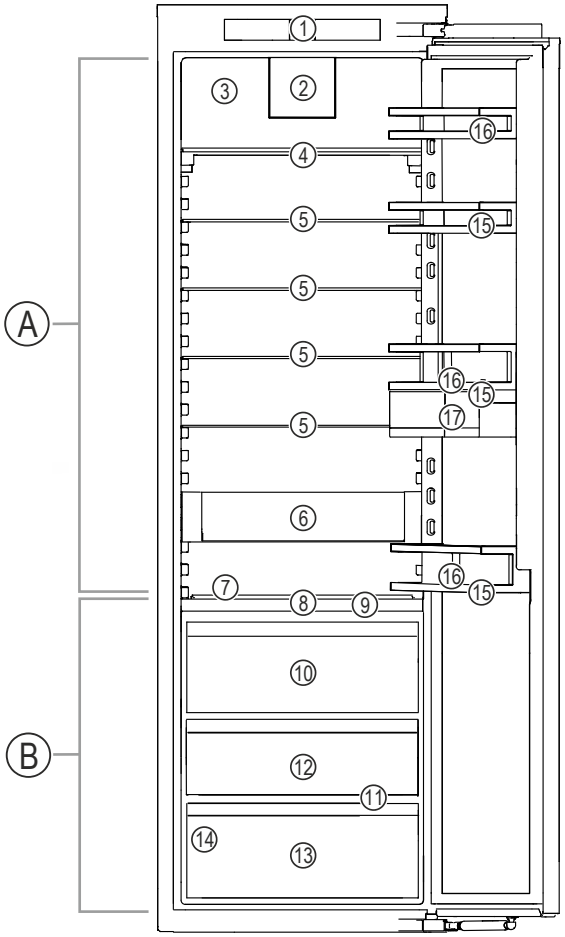

Fig. 1 Example illustration

Temperature range

(A) Fridge section **(B)** BioFresh

Equipment

(1) Controls
(2) Fan with FreshAir activated charcoal filter
(3) Dry rear wall
(4) Divisible shelf
(5) Shelf
(6) VarioSafe
(7) Variable bottle rack
(8) HydroBreeze
(9) Lid for Fruit & Vegetable-Safe
(10) Fruit & Vegetable-Safe
(11) Drain opening
(12) Fish & Seafood-Safe
(13) Meat & Diary-Safe
(14) Type plate
(15) Door racks
(16) Bottle holder
(17) VarioBoxes

2.3 SmartDevice

SmartDevice is the networking solution for your refrigerator.

If your appliance SmartDevice-enabled or compatible, you can quickly and easily connect your appliance to your WiFi. With the SmartDevice app, you can operate your appliance from a mobile device. Additional functions and setting options are available in the SmartDevice SmartDevice app.

SmartDevice-compatible appliance:	Your appliance is compatible for use with the SmartDeviceBox. You must first purchase and install the SmartDeviceBox. In order to connect your appliance to the WiFi, you need to download the SmartDevice app.

*** Depending on model and options**

More information about SmartDevice:	**smartdevice.liebherr.com**
Purchasing the SmartDeviceBox in the Liebherr-Hausgeräte store:	**home.liebherr.com/shop/de/deu/smartdevicebox.html**
Downloading the SmartDevice app:	After installing and configuring the SmartDevice app, you can connect your appliance to your Wi-Fi (see WiFi) using the SmartDevice app and the appliance's Wi-Fi function.

Note
The SmartDevice function is not available in the following countries: Russia, Belarus, Kazakhstan.

You cannot use the SmartDeviceBox.

2.4 Appliance range of use

Intended use

The appliance is only suitable for cooling food products in a domestic or household-like environment. This includes, for example, use:

- in staff kitchens, bed and breakfast establishments,
- by guests in country houses, hotels, motels and other accommodation,
- for catering and similar services in the wholesale trade.

The appliance is not suitable for freezing food;

All other types of use are not permitted.

Foreseeable misuse

The following applications are expressly forbidden:

- Storing and refrigerating medicines, blood plasma, laboratory preparations or similar substances and products based on the Medical Device Directive 2007/47/EC
- Use in outdoor areas with very high humidity
- Use in areas at risk of explosions

Misusing the appliance may lead to damage to the goods stored or they may spoil.

Climate classifications

Depending on the climate classification the appliance is designed to operate in restricted ambient temperatures. The climate classification applying to your appliance is printed on the rating plate.

Note
▶ Keep to the specified ambient temperatures in order to guarantee that the appliance works properly.

Climate classification	for ambient temperatures of
SN	10 °C to 32 °C
N	16 °C to 32 °C
ST	16 °C to 38 °C
T	16 °C to 43 °C
SN-ST	10 °C to 38 °C
SN-T	10 °C to 43 °C

2.5 Conformity

The refrigerant circuit has been tested for leaks. When installed, the appliance complies with the applicable safety regulations and with the corresponding directives.

The full text of the EU Declaration of Conformity is available on the following website: www.Liebherr.com

The BioFresh compartment meets the requirements of a cold storage compartment as set out in DIN EN 62552:2020.

2.6 Spare parts

The spare parts availability for functional parts and stockable parts of the equipment is 15 years.

3 Functionality of the Touch & Swipe display

You operate your appliance using the Touch & Swipe display. You select appliance functions in the Touch & Swipe display (hereafter referred to as display) by tapping them. If you do not perform any action on the display for 10 seconds, the display either jumps back to the higher-level menu or directly to the status display.

3.1 Navigation and symbol explanation

In the illustrations, different symbols are used to navigate the display. The following table describes these symbols.

Symbol	Description
	Briefly touch the display: Activates/deactivates function. Confirms selection. Opens submenu.
	Touch the display for a specified time (e.g. 3 seconds): Activates/deactivates function or value.
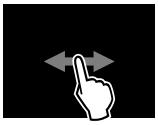	**Swipe left or right:** Navigate in the menu.
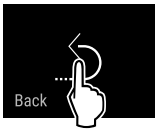	**Briefly touch the Back symbol:** Jumps back one menu level.
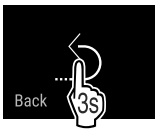	**Press and hold the Back symbol for 3 seconds:** Jumps back to the status display.
	Arrow with clock: It takes more than 10 seconds for the following message to appear in the display.

Symbol	Description
➡ ➡ ➡ 2s 5s 10s	**Arrow with a time indication:** It takes the specified amount of time until the following message appears in the display.
	“Open Settings menu” symbol: Navigates to the Settings menu and opens the settings menu. If necessary: Navigate to the desired function in the Settings menu. (see 3.2.1 Opening the Settings menu)
	“Open Advanced menu” symbol: Navigates to the Advanced menu and opens the advanced menu. If necessary: Navigate to the desired function in the Advanced menu. (see 3.2.2 Opening the expanded menu)
No action for 10 seconds	If you do not perform any action on the display for 10 seconds, the display either jumps back to the higher-level menu or directly to the status display.
Close the door and open it again.	If you close the door and immediately open it again, the display jumps directly back to the status display.

Note: Illustrations of the display are shown in the English version.

3.2 Menus

The appliance functions are distributed over various menus:

Menu	Description
Main menu	When you switch the appliance on, you are automatically in the main menu. From here you can navigate to the most important appliance functions, to the Settings menu and to the Advanced menu.
Settings Settings menu	The Settings menu contains additional appliance functions for setting up your appliance.
Advanced menu	The advanced menu contains special appliance functions for setting up your appliance. Access to the Advanced menu is protected by the numerical code **1 5 1**.

3.2.1 Opening the Settings menu

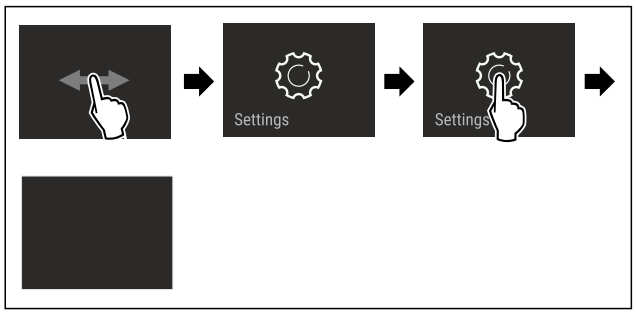

Fig. 2 Example illustration

▶ Carry out action steps according to the illustration.
▷ Settings menu is open.
▶ If necessary: Navigate to the desired function.

3.2.2 Opening the expanded menu

Fig. 3

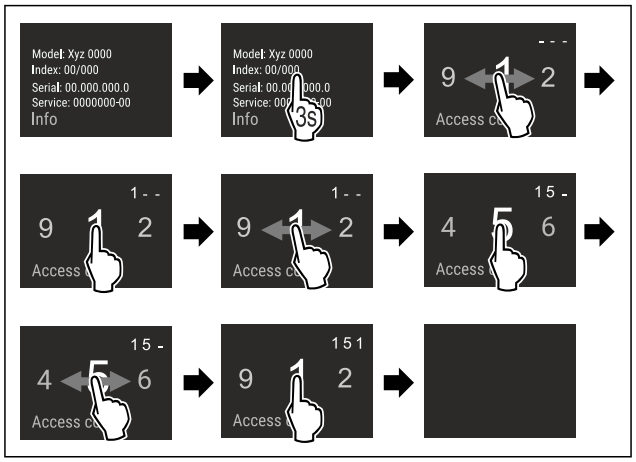

*Fig. 4 Example illustration, access with numerical code **151***

▶ Carry out action steps according to the illustration.
▷ The expanded menu is open.
▶ If necessary: Navigate to the desired function.

3.3 Sleep mode

If you do not touch the display for 1 minute, the display switches to sleep mode. In sleep mode, the display brightness is dimmed.

3.3.1 Ending sleep mode

▶ Touch the display briefly with your finger.
▷ Sleep mode is ended.

4 Putting into operation

4.1 Switching on appliance (first use)

Make sure that the following requirements are fulfilled:

- ❑ The appliance is properly installed and connected according to the installation instructions.
- ❑ All adhesive strips, adhesive and protective films and transport locks are removed from inside and on the appliance.
- ❑ All marketing leaflets are removed from the drawers.
- ❑ You are familiar with the functionality of the Touch & Swipe display. (see 3 Functionality of the Touch & Swipe display)

Switch on the appliance using the Touch & Swipe display:

▶ If the display is in sleep mode: Briefly touch the display.
▶ Carry out action steps according to the illustration.

*** Depending on model and options**

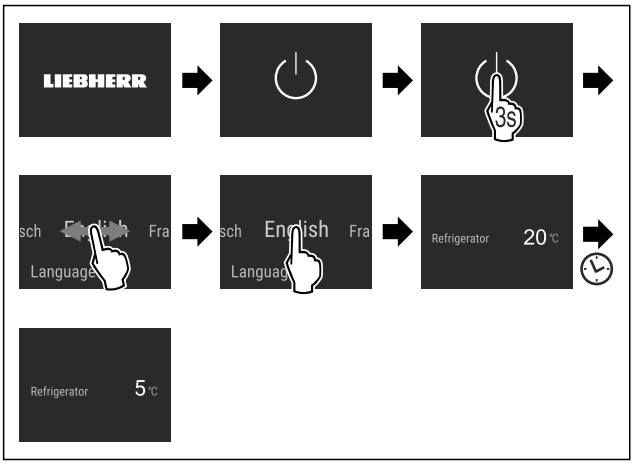

Fig. 5 Example illustration

▷ Status display appears.
▷ The appliance cools to the temperature set at the factory.
▷ The appliance starts in demo mode (status display with DEMO appears): If the appliance starts in demo mode, you can deactivate demo mode within the next 5 minutes. (see Demo mode)

More information:

- Start the HydroBreeze for the first time. (see 4.2 Starting the HydroBreeze for the first time)
- Start the SmartDevice for the first time. (see 2.3 SmartDevice) and (see WiFi)

Note
The manufacturer recommends:
▶ Stock with food: Wait for around 6 hours until the set temperature is reached.
▶ Observe the notes on storing food. (see 5.1 Information regarding storage)

Note
Accessories can be purchased from the Liebherr-Hausgeräte store at home.liebherr.com/shop/de/deu/zubehor.html.

4.2 Starting the HydroBreeze for the first time

If your appliance is equipped with HydroBreeze, you must clean the HydroBreeze **before using it for the first time**.

Make sure that the following requirements are fulfilled:

❑ The appliance is properly installed and connected.

▶ Clean the HydroBreeze. (see 9.8.4 Cleaning the HydroBreeze)
▶ Fill the water tank. (see 8.8.1 Fill the water tank)
▶ Activate HydroBreeze. (see HydroBreeze)

5 Storage

5.1 Information regarding storage

WARNING
Fire hazard from electrical appliances!
If you use electrical appliances in the food area of your appliance, they can cause a fire.
▶ Do not use electrical appliances in the food area of the appliance unless recommended by the manufacturer.

Note
The energy consumption increases and the cooling power goes down if ventilation is not sufficient.
▶ Always keep air slots clear.

Observe the following specifications for storage:

- Keep the air vents on the fan free.
- Package or cover foods that readily take on or give off odours or taste in closed containers.
- Package raw meat or fish in clean, closed containers. This will prevent meat or fish from touching or dripping onto other food.
- Keep liquids in closed containers.
- Leave space between goods to ensure good air circulation.
- Store food according to the instructions on the packaging.
- Always observe the best-before date indicated on the packaging.

Note
Failure to follow these guidelines can lead to foodstuffs spoiling.

5.2 Fridge compartment

The air circulation in the appliance creates different temperature zones. You will find the different temperature zones in the appliance and equipment overview. (see 2.2 Overview of the appliance and equipment)

5.2.1 Arranging your food properly

▶ Upper area and door: Store butter, cheese, tinned food and tubes.
▶ Coldest temperature zone: Store perishable foods such as pre-cooked meals.

5.3 BioFresh

BioFresh will extend the storage time for some fresh foods compared to traditional refrigeration.

Note
If the temperature drops below 0 °C foods may freeze.
▶ Store cold-sensitive produce such as cucumbers, aubergines, courgettes and tropical fruit in the fridge compartment.

5.3.1 Fruit & Vegetable safe

This safe creates a storage climate of close to 0 °C. The compartment lid ensures constant levels of humidity. This storage climate is suitable for storing unpackaged food with high intrinsic moisture (for example, lettuce, vegetables, fruit).

The humidity in the compartment depends on the moisture content of the chilled goods placed in it, and also depends on how often the compartment is opened. You can regulate the humidity level.

Arranging your food properly

▶ Store unpackaged fruit and vegetables.
If the humidity is too high:
▶ Regulate the humidity.

5.3.2 Meat & Dairy safe

This safe creates a storage climate of close to 0 °C. This storage climate is suitable for more sensitive foods (e.g. dairy products, meat, sausage).

Arranging your food properly

▶ Store dry or packaged food.

5.3.3 Fish & Seafood safe -2°C | 0°C

This safe creates a storage climate of between -2 °C and 0 °C. This storage climate is great for dry or packaged groceries (for example, dairy products, meat, fish, seafood, sausage).

This compartment includes a Fish & Seafood tray that you can move or take away.

You can set the temperature via the Touch & Swipe display. Dividing the compartment into different temperature zones is only possible with the Fish & Seafood tray inserted. (see Setting the temperature in the fridge section)

The following temperature combinations are possible:

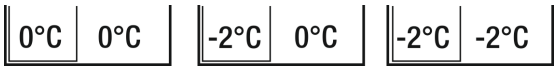

Fig. 6

Arranging your food properly

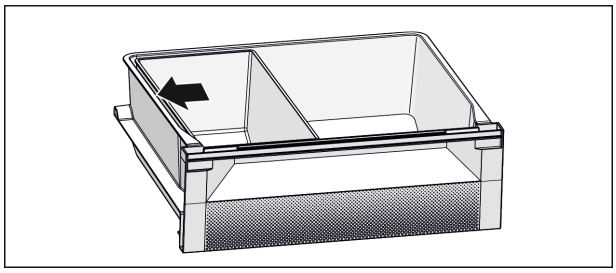

Fig. 7

▶ For an optimum cooling function: Position Fish & Seafood tray according to illustration (see Fig. 7) .
▶ Temperature zone -2 °C: Store fresh seafood or fish.
▶ Temperature zone 0 °C: Store dairy products or packaged meats.

Note

You can achieve the highest level of energy efficiency using the temperature combination **0 °C / 0 °C**.

Energy consumption is slightly higher using the temperature combination **-2 °C / 0 °C** and **-2 °C / -2 °C**.

5.4 Storage times

Refer to the specified storage times as a guide.

In the case of foods with a minimum shelf life, the date indicated on the packaging still applies.

5.4.1 Fridge section

Always follow the best-before date stated on the packaging.

5.4.2 BioFresh

Recommended storage periods in the Meat & Dairy-Safe		
Butter	at 1 °C	up to 90 days
Hard cheese	at 1 °C	up to 110 days
Milk	at 1 °C	up to 12 days
Sausage, cold meats	at 1 °C	up to 8 days
Poultry	at 1 °C	up to 6 days
Pork	at 1 °C	up to 6 days
Beef	at 1 °C	up to 6 days
Game	at 1 °C	up to 6 days

Note

▶ Remember that high-protein foods perish quicker; shellfish and crustaceans do not last as long as fish, and fish does not last as long as meat.

Recommended storage periods in the Fruit & Vegetable-Safe		
Vegetables, salads		
Artichokes	at 1 °C	up to 14 days
Celery	at 1 °C	up to 28 days
Cauliflower	at 1 °C	up to 21 days
Broccoli	at 1 °C	up to 13 days
Chicory	at 1 °C	up to 27 days
Lettuce	at 1 °C	up to 19 days
Peas	at 1 °C	up to 14 days
Kale	at 1 °C	up to 14 days
Carrots	at 1 °C	up to 80 days
Garlic	at 1 °C	up to 160 days
Turnip	at 1 °C	up to 14 days
Lettuce	at 1 °C	up to 13 days
Herbs	at 1 °C	up to 13 days
Leeks	at 1 °C	up to 29 days
Mushrooms	at 1 °C	up to 7 days
Radishes	at 1 °C	up to 10 days
Brussels sprouts	at 1 °C	up to 20 days
Asparagus	at 1 °C	up to 18 days
Spinach	at 1 °C	up to 13 days
Savoy	at 1 °C	up to 20 days
Fruit		
Apricots	at 1 °C	up to 13 days
Apples	at 1 °C	up to 80 days
Pears	at 1 °C	up to 55 days
Blackberries	at 1 °C	up to 3 days
Dates	at 1 °C	up to 180 days
Strawberries	at 1 °C	up to 7 days
Figs	at 1 °C	up to 7 days
Blueberries	at 1 °C	up to 9 days
Raspberries	at 1 °C	up to 3 days
Currants	at 1 °C	up to 7 days
Sweet cherries	at 1 °C	up to 14 days
Kiwis	at 1 °C	up to 80 days
Peaches	at 1 °C	up to 13 days
Plums	at 1 °C	up to 20 days
Cranberries	at 1 °C	up to 60 days
Rhubarb	at 1 °C	up to 13 days

Recommended storage periods in the Fruit & Vegetable-Safe		
Gooseberries	at 1 °C	up to 13 days
Grapes	at 1 °C	up to 29 days

Recommended storage periods in the Fish & Seafood-Safe		
Seafood		
Crabs	at -2 °C	up to 4 days
Mussels	at -2 °C	up to 6 days
Sushi	at -2 °C	up to 4 days
Fish	at -2 °C	up to 4 days

6 Saving energy

- Pay attention to good ventilation. Do not cover ventilation holes or grids.
- Always keep the fan air slits clear.
- Do not install the appliance in direct sunlight or near radiators or similar sources of heat.
- If the appliance is installed directly next to an oven, the energy consumption may increase slightly. This is dependent on the service life and usage intensity of the oven.
- Energy consumption depends on the installation conditions, e.g. the ambient temperature (see 2.4 Appliance range of use) . A warmer ambient temperature can increase the energy consumption.
- Open the appliance for as short a time as possible.
- The lower the temperature is set the higher the energy consumption.
- Sort your food: home.liebherr.com/food.
- Keep all food properly packed and covered. This prevents frost from forming.
- Only take food out for as long as necessary so that it doesn't warm up too much.
- Inserting warm food: allow to cool down to room temperature first.
- For longer periods of absence, use HolidayMode (see HolidayMode) .

7 Controls

7.1 Controls and displays

7.1.1 Status display

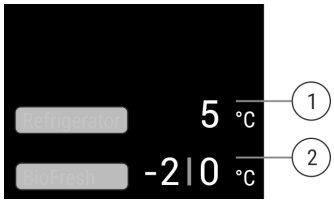

Fig. 8 The status display shows the actual temperature.

(1) Temperature display of the fridge section

(2) Temperature displayBio-Fresh (Fish & Seafood Safe)

The status display shows the actual temperature and is the initial display. Navigation to the functions takes place from there.

7.1.2 Display symbols

Display symbols provide information on the current appliance status:

Symbol	Appliance status
	Standby The appliance or temperature zone is switched off.
	Flashing number Appliance is working. Temperature flashes until the set temperature is reached.
	Flashing symbol Appliance is working. Setting is made.

7.2 Appliance functions

7.2.1 Notes on the appliance functions

The appliance functions are set at the factory so that your appliance is fully functional.

Before you alter, activate or deactivate the device functions, make sure that the following requirements are met:

- ❑ You have read and understood the descriptions of how the display works. (see 3 Functionality of the Touch & Swipe display)
- ❑ You have familiarised yourself with the operating and display elements of your appliance.

Switching the appliance off and on

Use this function to switch the entire appliance off and on.

Switching off the appliance

When you switch the appliance off, then the previously saved settings are saved.

Make sure that the following requirements are fulfilled:

- ❑ Handling instructions (see 11 Shutting down) are carried out.

Fig. 9

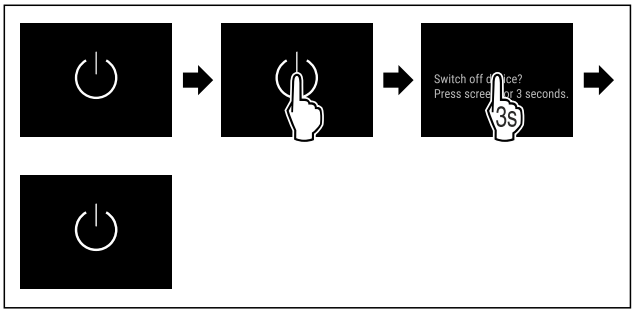

Fig. 10

▶ Carry out action steps according to the illustration.
▷ Appliance is switched off.
▷ The standby symbol appears in the display.

▷ Display turns black.

Switching on the appliance

If the display is in sleep mode:

▶ Briefly touch the display.

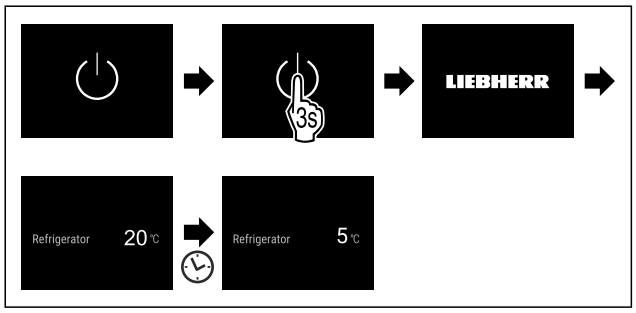

Fig. 11 Example illustration

▶ Carry out action steps according to the illustration.
When the appliance starts in demo mode:

▶ Deactivating demo mode. (see Deactivating demo mode)

▷ The appliance is switched on.

▷ Previous settings are restored.

▷ The appliance cools to the target temperature set.

WiFi

Use this function to connect your appliance to WiFi. You can then operate it via the SmartDevice app on a mobile device. You can also use this function to disconnect or reset the WiFi connection.

To connect your device to WiFi, you need the SmartDeviceBox.

More information on the SmartDevice: (see 2.3 SmartDevice)

Note
The SmartDevice function is not available in the following countries: Russia, Belarus, Kazakhstan.

You cannot use the SmartDeviceBox.

Establishing the WiFi connection for the first time

Make sure that the following requirements are fulfilled:

❑ You have purchased and inserted a SmartDeviceBox. (see 2.3 SmartDevice)

❑ You have installed the SmartDevice app (see apps.home.liebherr.com).

❑ Registration in the SmartDevice app is completed.

Fig. 12

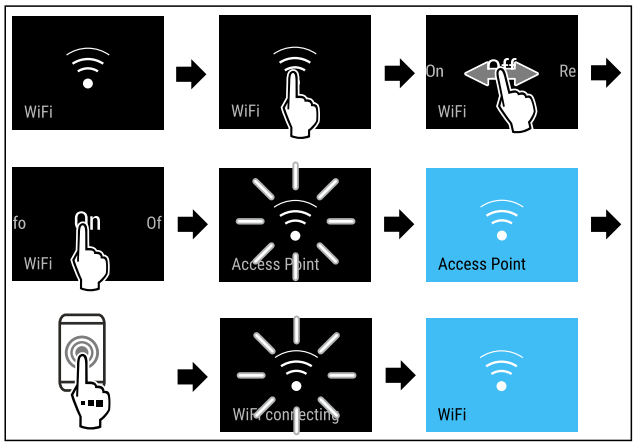

Fig. 13

▶ Carry out action steps according to the illustration.

▷ Connection is established.

Disconnecting from the WiFi

Fig. 14

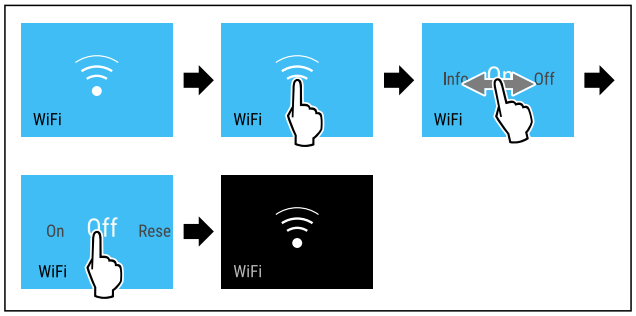

Fig. 15

▶ Carry out action steps according to the illustration.

▷ There is no connection.

Resetting the WiFi connection

Fig. 16

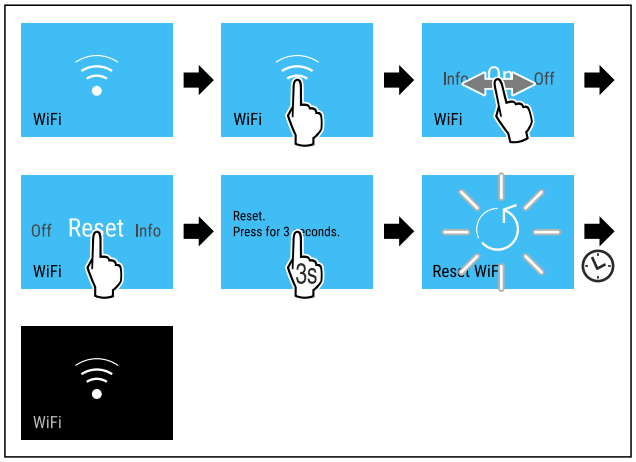

Fig. 17

▶ Carry out action steps according to the illustration.

▷ WiFi connection and other WiFi settings are reset to factory settings.

Showing information about the WiFi connection

Fig. 18

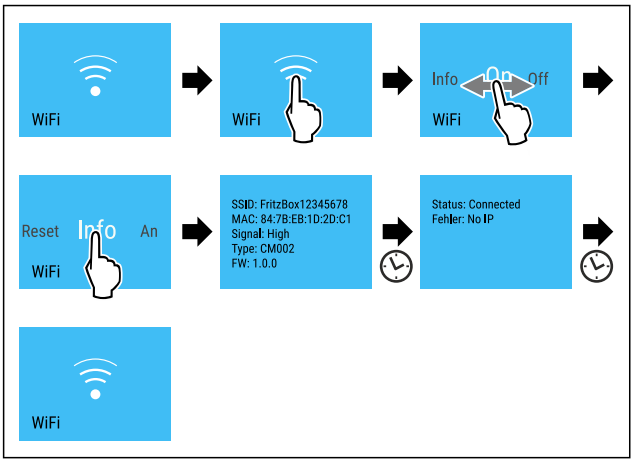

Fig. 19

▶ Carry out action steps according to the illustration.

5 °C Temperature

Use this function to set the temperature.

The temperature depends on the following factors:

- Frequency of door opening
- Duration of door opening
- Room temperature of the installation site
- Type, temperature and quantity of food

Temperature zone	Factory-set temperature	Recommended setting
5 °C Fridge section	5 °C	4 °C
Fruit & Vegetable-safe Meat & Dairy-safe	0 °C	B-Value (see BioFresh B-Value)
-2 | 0 °C Fish & Seafood-safe	-2 °C | 0 °C	(see 5.3.3 Fish & S eafood safe)

Setting the temperature in the fridge section

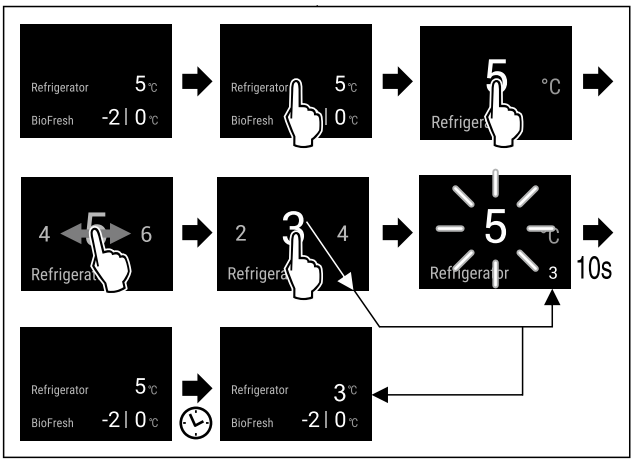

Fig. 20 Example illustration

▶ Carry out action steps according to the illustration.

▷ Temperature is set.

Setting the temperature in BioFresh

Set the temperature using the **BioFresh B-Value**.
(see BioFresh B-Value)

Setting the temperature in the Fish & Seafood safe

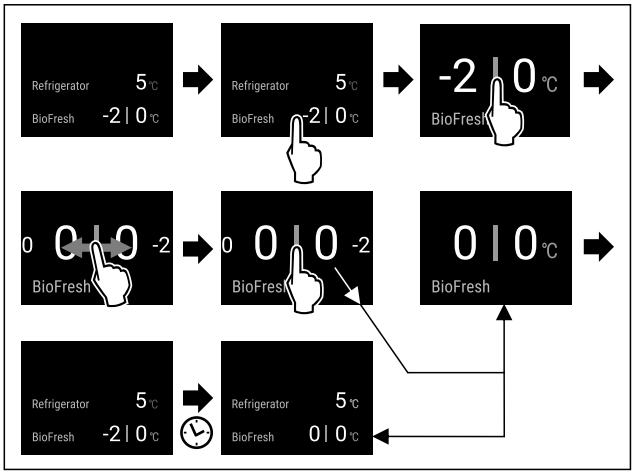

Fig. 21 Example illustration

▶ Carry out action steps according to the illustration.

▷ Temperature is set.

°C/°F Temperature unit

Use this function to set the temperature unit. You can set degrees Celsius or degrees Fahrenheit as the temperature unit.

Setting the temperature unit

Fig. 22

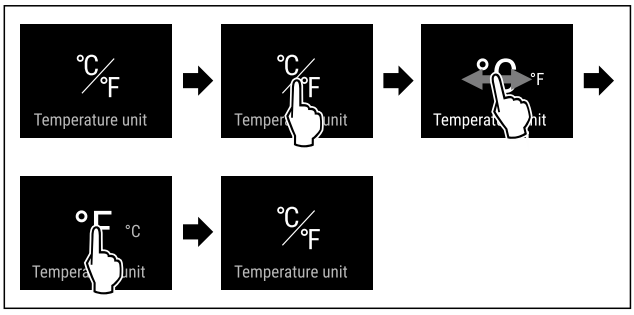

Fig. 24 Example illustration: Switch from degrees Celsius to degrees Fahrenheit.

▶ Carry out action steps according to the illustration.

▷ The temperature unit is set.

B5 BioFresh B-Value

Use this function to set the BioFresh B-Value. With the BioFresh B-Value, you can set BioFresh slightly warmer or colder if necessary due to higher or lower ambient temperatures. The BioFresh B-Value is pre-set to value B5 as delivered. If you change the B-Value, refer to the following table:

Value	Description
B1	Lowest temperature
B1-B4	The temperature can drop below 0 °C which means foods can easily freeze.

Value	Description
B5	Pre-set temperature
B9	Highest temperature

Setting the BioFresh B-Value

Fig. 25

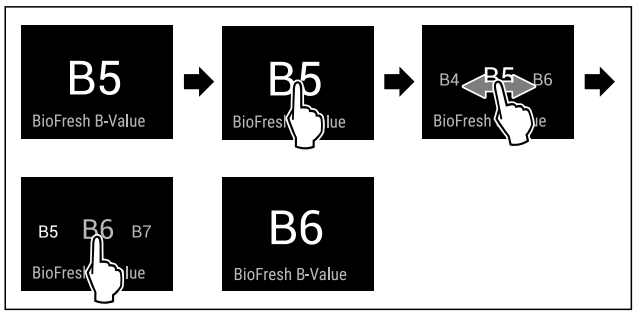

Fig. 27 Example illustration: Switch from B5 to B6.

▶ Carry out action steps according to the illustration.
▷ The BioFresh B-Value is set.

D1 D-Value

The D-Value is pre-set for your appliance and is not permitted to be changed.

SuperCool

You can use this function to activate or deactivate SuperCool. If SuperCool is activated, then the appliance increases the cooling capacity. It allows you to achieve lower cooling temperatures. You can activate SuperCool when you would like to cool a large quantity of food quickly.

If the function is active, the appliance operates at higher power. As a result, the appliance's operating noise may be temporarily louder and energy consumption will increase.

Activating SuperCool

Time for activation of the function:

- When you would like to store fresh food in the fridge section: Activate the function when inserting food.

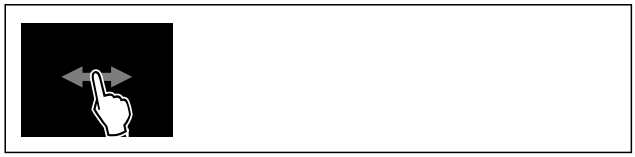

Fig. 28

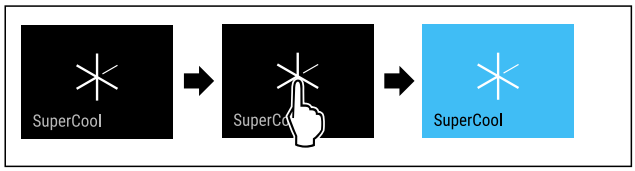

Fig. 29

▶ Carry out action steps according to the illustration.
▷ SuperCool is activated.
▷ The temperature display turns blue.

Deactivating SuperCool

SuperCool is deactivated automatically after 18 hours. However, you can also deactivate SuperCool manually at any time:

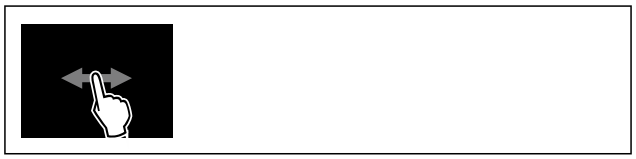

Fig. 30

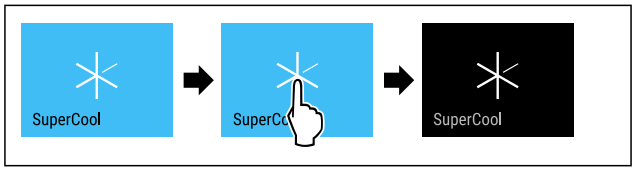

Fig. 31

▶ Carry out action steps according to the illustration.
▷ SuperCool is deactivated.
▷ The appliance continues to run in normal mode.
▷ The appliance cools to the temperature set previously.

PartyMode

You can use this function to activate or deactivate PartyMode. PartyMode activates various functions that are useful for a party.

PartyMode activates the following functions:

- SuperCool (see SuperCool)

You can adjust all listed functions individually and flexibly. When you deactivate PartyMode, all changes are discarded.

If the function is active, the device operates at higher power. As a result, the device's operating noise may be temporarily louder and energy consumption will increase.

Activating PartyMode

Fig. 32

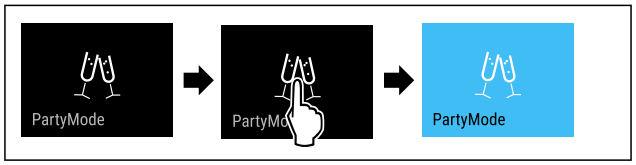

Fig. 33

▶ Carry out action steps according to the illustration.
▷ PartyMode and the associated functions are activated.
▷ The temperature display turns blue.
▷ The current temperature flashes until the target temperature is reached.

Deactivating PartyMode

The PartyMode is automatically deactivated after 24 seconds. However, you can also deactivate PartyMode manually at any time:

Fig. 34

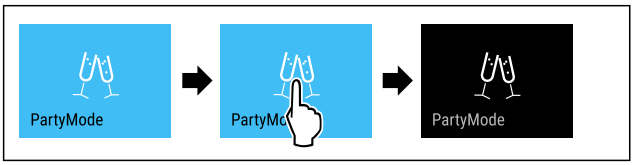

Fig. 35

▶ Carry out action steps according to the illustration.
▷ PartyMode is deactivated.
▷ The appliance cools to the temperature set previously: The current temperature flashes until the target temperature is reached.

HolidayMode

You can use this function to activate or deactivate HolidayMode. If you activate HolidayMode, the fridge section is set to 15 °C. This saves you energy during longer periods of absence and prevents bad odours and growth of mould.

Appliance status when HolidayMode is active
Fridge section cools to 15 °C.
BioFresh cools to 15 °C.
PartyMode is deactivated.
SuperCool is deactivated.

Activating HolidayMode

▶ Empty the fridge section completely.
▶ Empty BioFresh completely.

Fig. 36

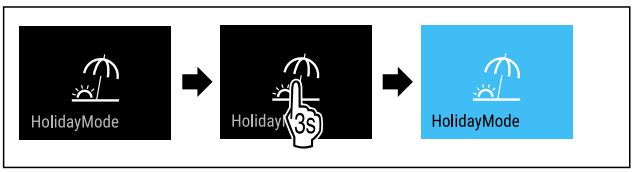

Fig. 37

▶ Carry out action steps according to the illustration.
▷ HolidayMode is activated.
▷ Temperature display turns blue and shows HolidayMode symbol.

Deactivating HolidayMode

Fig. 38

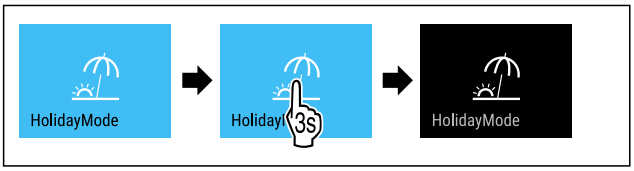

Fig. 39

▶ Carry out action steps according to the illustration.
▷ HolidayMode is deactivated.
▷ The appliance cools to the temperature set previously.

SabbathMode

You can use this function to activate or deactivate SabbathMode. If you activate this function, some electronic functions are switched off. As a result, your device meets the religious requirements for Jewish holidays such as Sabbath and complies with STAR-K Kosher certification.

Device status when SabbathMode is active
The status display shows SabbathMode permanently.
All functions on the display are locked except for the **Deactivate SabbathMode function**.
Active functions remain active.
The display remains bright when you close the door.
The interior lighting is deactivated.
Reminders are not implemented. The set time interval stops.
Reminders and warnings are not displayed.
There is no door alarm.
There is no temperature alarm.
The defrosting cycle operates only for the specified time, without considering the appliance consumption.
After a power failure, the appliance returns to SabbathMode.

Device status

Note
This appliance has certification from the “Institute for Science and Halacha”. (www.machonhalacha.co.il)

You can find a list of STAR-K-certified appliances at www.star-k.org/appliances.

Activating SabbathMode

WARNING
Danger of food poisoning from spoiled food!
If you have SabbathMode activated and a power failure occurs, no message appears in the status display about the power failure. Once the power is restored, the appliance continues to operate in SabbathMode. The power failure may mean that food spoils and the consumption of this food could lead to food poisoning.
After a power failure:
▶ Do not consume food that was frozen and has thawed out.

Fig. 40

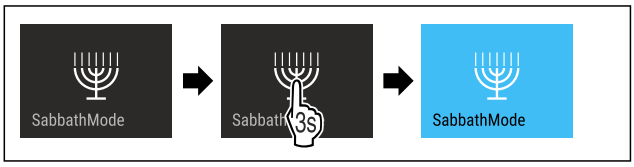

Fig. 41

▶ Carry out action steps according to the illustration.
▷ SabbathMode is activated.

▷ The status display shows SabbathMode permanently.

Deactivating SabbathMode

The SabbathMode is automatically deactivated after 80 hours. However, you can also deactivate SabbathMode manually at any time:

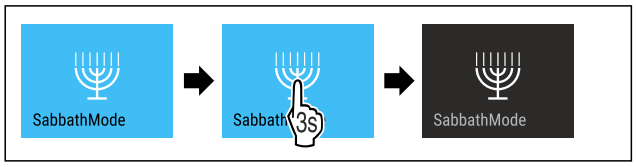

Fig. 42

▶ Carry out action steps according to the illustration.
▷ SabbathMode is deactivated.

EnergySaver

You can use this function to activate or deactivate Energy saving mode. If energy saving mode is activated, the energy consumption decreases and the temperature in the device increases. The food remains fresh, but the shelf life is shortened.

Temperature zone	Recommended setting (see Setting the temperature in the fridge section)	Temperature with active EnergySaver
5 °C Fridge section	4 °C	7 °C

Temperatures

Activating EnergySaver

Fig. 43

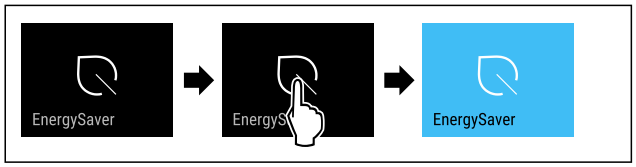

Fig. 44

▶ Carry out action steps according to the illustration.
▷ Energy saving mode is activated.

Deactivating EnergySaver

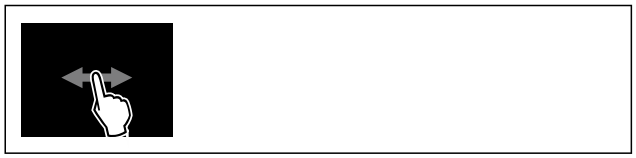

Fig. 45

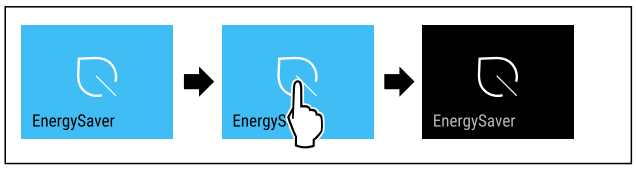

Fig. 46

▶ Carry out action steps according to the illustration.

▷ Energy saving mode is deactivated.

HydroBreeze

You can use this function to activate or deactivate HydroBreeze. If you activate the function, HydroBreeze generates a fine, cool mist in BioFresh-safe. This extends the shelf life of unpackaged salad, vegetables and fruit with high intrinsic moisture.

If you activate the function, HydroBreeze activates every 90 minutes for 4 seconds when the door is closed. When you open the door, HydroBreeze activates according to the setting:

Value	Description
1	HydroBreeze is active for 4 seconds when the door is open.
2	HydroBreeze is active for 6 seconds when the door is open.
3	HydroBreeze is active for 8 seconds when the door is open.
Deactivated (pre-setting)	HydroBreeze is deactivated.

HydroBreeze duration when the door is open

Activating HydroBreeze

Note

If you activate HydroBreeze but there is no food in the drawer, condensate forms on the base of the drawer.

▶ Only activate HydroBreeze if you are storing food in the drawer.

Make sure that the following requirements are fulfilled:

❑ The HydroBreeze is clean. (see 9.8.4 Cleaning the HydroBreeze)
❑ The water tank is full. (see 8.8.1 Fill the water tank)

Activate HydroBreeze by selecting a value for the HydroBreeze duration:

Fig. 47

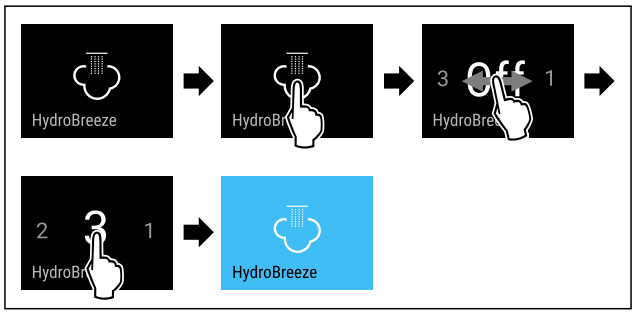

Fig. 48 Example illustration: Activate HydroBreeze with value 3.

▶ Carry out action steps according to the illustration.
▷ HydroBreeze is activated.

Deactivating HydroBreeze

Fig. 49

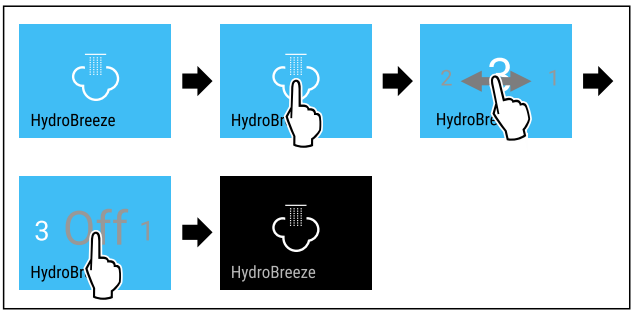

Fig. 50

▶ Carry out action steps according to the illustration.
▷ HydroBreeze is deactivated.

CleaningMode

You can use this function to activate or deactivate CleaningMode. CleaningMode enables the appliance to be cleaned conveniently.

This setting applies to the fridge section.

Application:

- Clean the fridge section. (see 9.8 Cleaning the appliance)

Device status when CleaningMode is active
The status display shows CleaningMode permanently.
The fridge section is switched off.
Interior lighting is activated.
The reminders and warnings are not displayed. No signal tone sounds.

Device status

Activating CleaningMode

Fig. 51

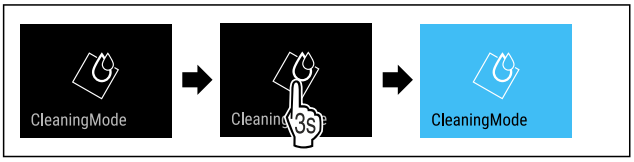

Fig. 52

▶ Carry out action steps according to the illustration.
▷ CleaningMode is activated.
▷ The status display shows CleaningMode permanently.

Deactivating CleaningMode

CleaningMode is deactivated automatically after 60 minutes. However, you can also deactivate CleaningMode manually at any time:

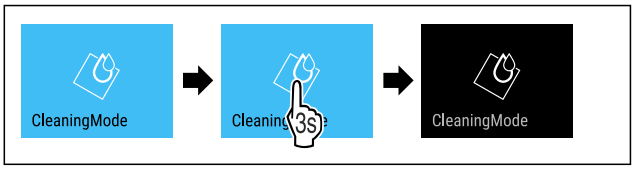

Fig. 53

▶ Carry out action steps according to the illustration.
▷ CleaningMode is deactivated.
▷ The appliance cools to the temperature set previously.

Display brightness

Use this function to set the display brightness in stages.

You can select the following brightness levels:

- 40 %
- 60 %
- 80 %
- 100 % (pre-setting)

Setting the brightness

Fig. 54

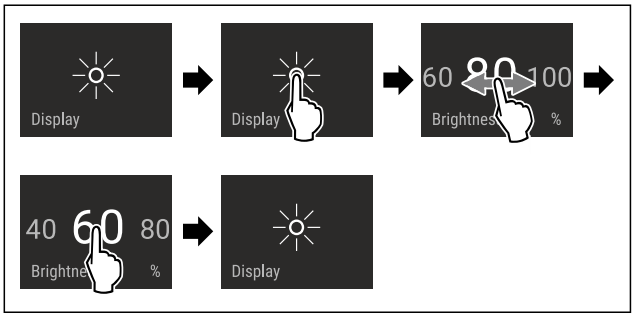

Fig. 55 Example illustration: Switch from 80 % to 60 %.

▶ Carry out action steps according to the illustration.
▷ The brightness is set.

Door alarm

Use this function to activate or deactivate the door alarm. The door alarm sounds if the door is open for too long. The door alarm is activated on delivery. You can set how long the door may be open before the door alarm sounds.

The following values can be set:

- 1 minute
- 2 minutes
- 3 minutes
- Off

Setting the door alarm

Fig. 56

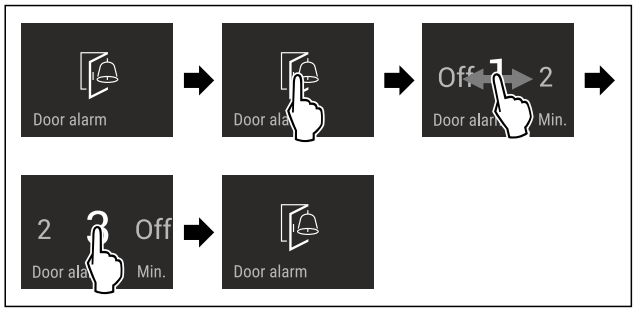

Fig. 57 Example illustration: Change door alarm from 1 minute to 3 minutes.

▶ Carry out action steps according to the illustration.
▷ The door alarm is set.

Deactivating the door alarm

Fig. 59

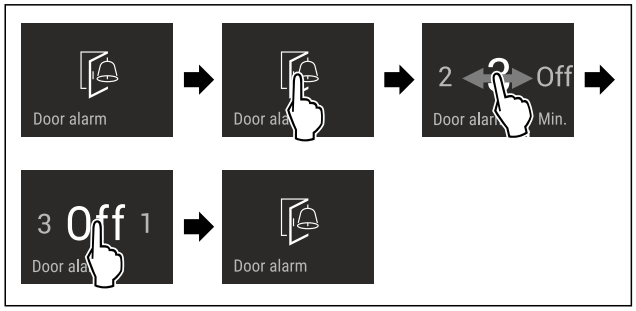

Fig. 60

▶ Carry out action steps according to the illustration.
▷ The door alarm is deactivated.

Input lock

You can use this function to activate or deactivate the input lock. The input lock prevents the appliance being operated accidentally, e.g. by children.

Application:

- Avoid unintentional modification of functions.
- Avoid unintentional switching off of the device.
- Avoid unintentional temperature setting.

Activating the input lock

If you activate the input lock, you can continue to navigate in the menus but you cannot select or change other functions.

Fig. 61

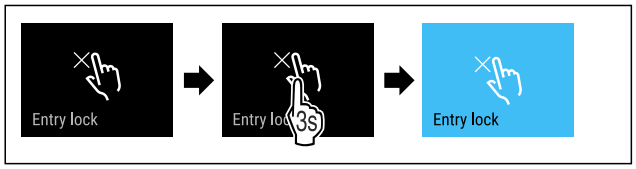

Fig. 62

▶ Carry out action steps according to the illustration.
▷ Input lock is activated.

Deactivating the input lock

Fig. 63

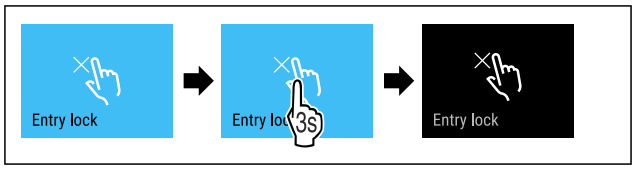

Fig. 64

▶ Carry out action steps according to the illustration.
▷ Input lock is deactivated.

Language

Use this function to set the display language.

You can select the following languages:

- Deutsch
- English
- Français
- Español
- Italiano
- Nederlands
- Čeština
- Polski
- Português
- Bulgarian
- Русский
- 温度单位

Setting the language

Fig. 65

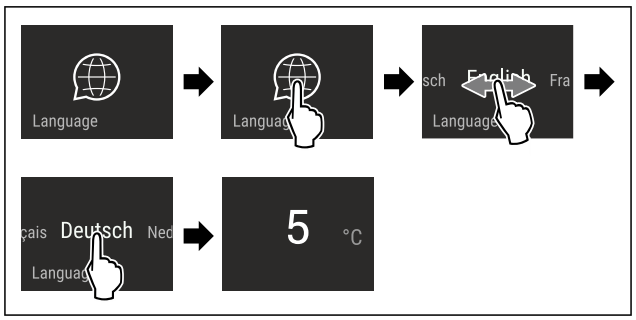

Fig. 66 Example illustration depending on the language and temperature

▶ Carry out action steps according to the illustration.
▷ The language is set.
▷ The display returns to the status display.

Device information

Use this function to indicate the model name, index, serial number and service number of your device. You will need the device information when you contact customer service. (see 10.4 Customer Service)

This function also opens the Advanced menu. (see 3 Functionality of the Touch & Swipe display)

Indicating the device information

Fig. 67

Fig. 68

▶ Carry out action steps according to the illustration.
▷ Display indicates device information.

Software

Use this function to indicate the software version of your device.

Indicating the software version

Fig. 69

Fig. 70

▶ Carry out action steps according to the illustration.
▷ Display indicates software version.

Reminder

Use this function to activate or deactivate the reminders. The function is activated on delivery.

If the function is activated, the following reminders will appear:

- Replace the FreshAir activated carbon filter (see Replace the FreshAir activated carbon filter)

Activating the reminder

Fig. 71

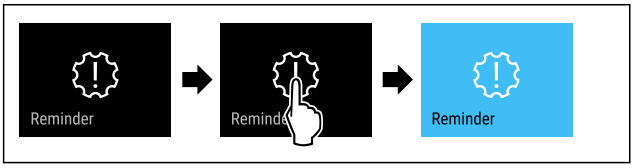

Fig. 72

▶ Carry out action steps according to the illustration.
▷ Reminder is activated.

Deactivating the reminder

Fig. 73

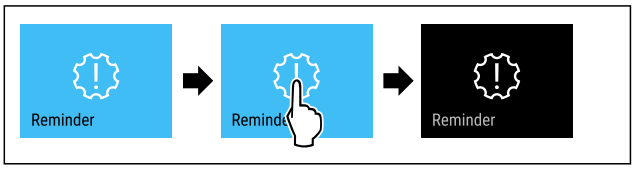

Fig. 74

▶ Carry out action steps according to the illustration.
▷ Reminder is deactivated.

Demo mode

Demo mode is a special feature for dealers who want to demonstrate appliance features. If you activate demo mode, all refrigeration functions are deactivated.

If you switch on your appliance and “Demo” appears in the status display, then demo mode is already activated.

If you activate and then deactivate demo mode, the appliance will be reset to factory defaults. (see Resetting to factory settings)

Activating demo mode

Fig. 75

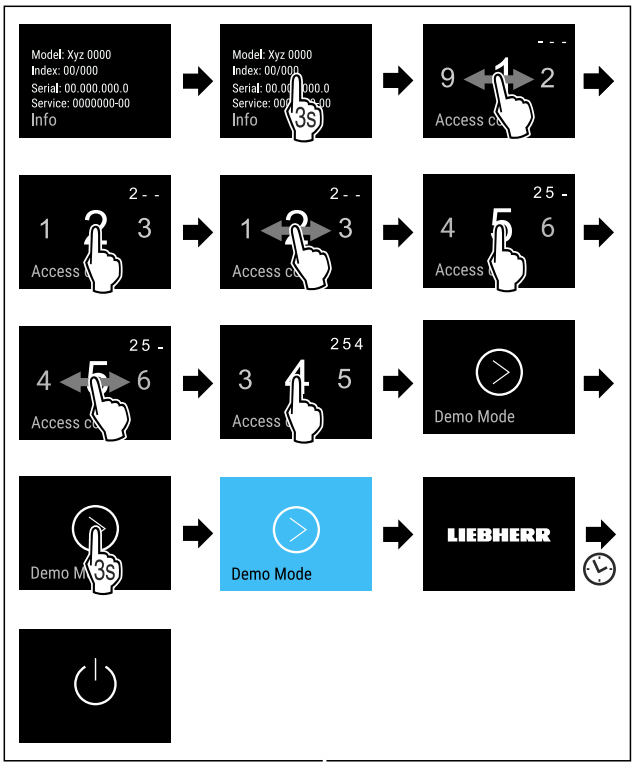

Fig. 76

▶ Carry out action steps according to the illustration.
▷ Demo mode is activated.
▷ Appliance is switched off.
▶ Switch on the appliance. (see 4.1 Switching on appliance (first use))

▷ “DEMO” appears in the status display.

Deactivating demo mode

Fig. 77

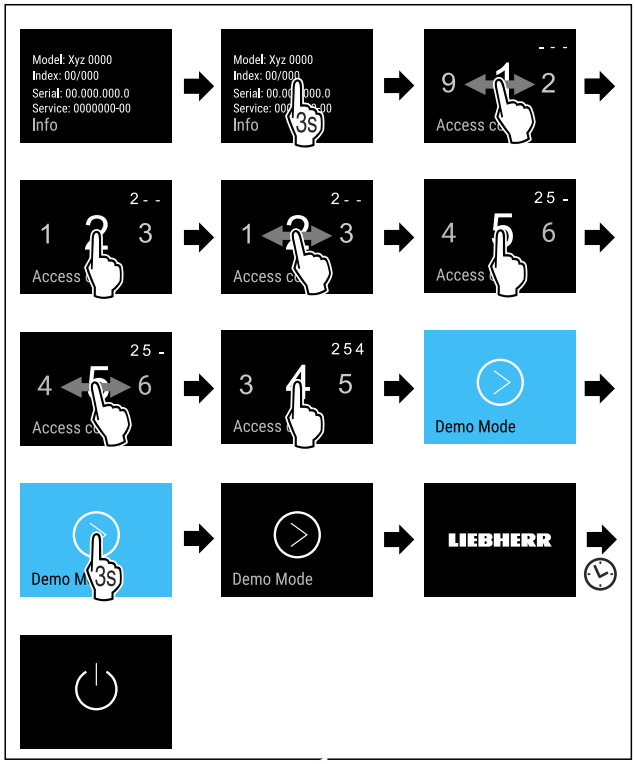

Fig. 78

▶ Carry out action steps according to the illustration.
▷ Demo mode is deactivated.
▷ Appliance is switched off.
▶ Switch on the appliance. (see 4.1 Switching on appliance (first use))
▷ Appliance is reset to factory settings.

Resetting to factory settings

Use this function to reset all settings to factory defaults. All settings you have made so far are reset to their original settings.

Performing a reset

Fig. 79

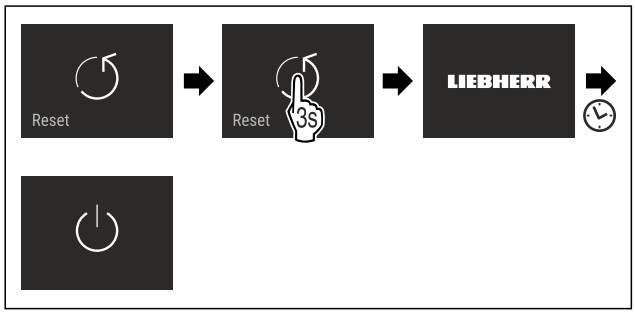

Fig. 80

▶ Carry out action steps according to the illustration.
▷ Device is reset.
▷ Device is switched off.
▶ Restart the device. (see 4.1 Switching on appliance (first use))

7.3 Messages

There are two categories of messages:

Category	Importance
Warning	Warnings appear in the event of a door alarm or malfunction. Simple warnings can be cancelled by yourself. In the event of serious malfunctions, you must contact customer service. (see 10.4 Customer Service)
Reminder	Reminders remind you of general processes. You can carry out these operations to end the message.

7.3.1 Overview of warnings

Behaviour of the appliance in the event of warnings:

- Warning appears in red on the display.
- The alarm tone sounds at an ever-increasing volume.
- The interior lighting pulsates for some warnings.

Message	Cause	Exit the message
Close the door. **Door alarm**	The message appears if the door is open for too long.	Carry out action steps. (see Door alarm)
Error **Error**	The message appears if there is an appliance error. A component of the appliance has a fault.	Carry out action steps. (see Error)

7.3.2 Ending warnings

Door alarm

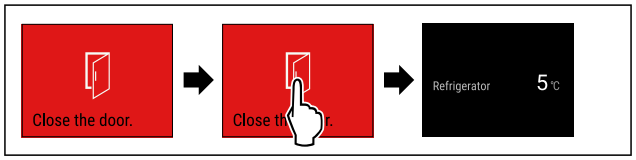

Fig. 81 Example illustration

▶ Carry out action steps according to the illustration.
-or-
▶ Close the door.

▷ The display returns to the status indicator.

You can set how long the door may be open before the door alarm sounds. (see Setting the door alarm)

Error

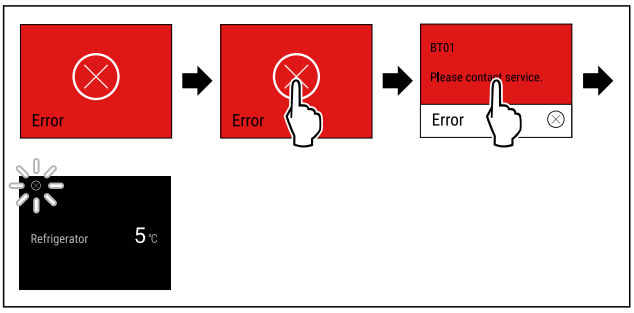

Fig. 82 Example illustration

▶ Briefly touch the display.
▷ Error code is displayed.
▶ Note the error code.
▶ Briefly touch the display.
▷ The display returns to the status indicator.
▶ Contact Customer Service. (see 10.4 Customer Service)

7.3.3 Overview of reminders

Behaviour of the appliance during reminders:

- Reminder appears yellow on the display.
- Alarm tone sounds.
- The interior lighting pulsates for some reminders.

The following reminders can be deactivated (see Deactivating the reminder) :

- Replace the FreshAir activated carbon filter

Message	Cause	Exit the message
FreshAir filter **Replace the FreshAir activated carbon filter**	The message appears when the FreshAir activated carbon filter needs to be replaced.	Carry out action steps. (see Replace the FreshAir activated carbon filter)

7.3.4 Ending reminders

Replace the FreshAir activated carbon filter

Liebherr recommends: Replace the FreshAir activated carbon filter every 6 months.

Note
FreshAir activated charcoal filters can be purchased from the Liebherr-Hausgeräte store at home.liebherr.com/shop/de/deu/zubehor.html.

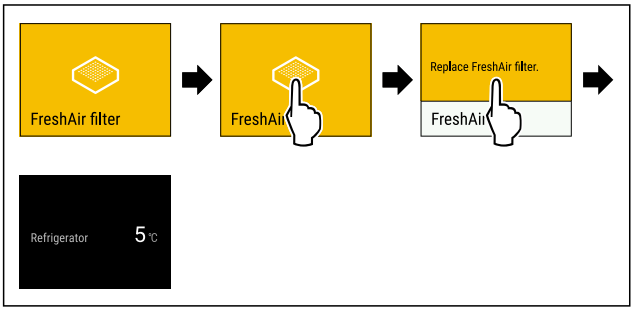

Fig. 83 Example illustration

▶ Briefly touch the display.
▷ Display shows reminder information.
▶ Briefly touch the display.
▶ Replace the activated carbon filter. (see 9.1 FreshAir carbon filter)
▷ Activated carbon filter ensures optimum air quality in the cooling unit.
▷ Reminder appears again after 6 months.

If you no longer wish to receive this reminder, you can deactivate it. (see Deactivating the reminder)

8 Features

8.1 Door rack

Door racks are suitable for storing drinks and food. You can move door racks for your own individual use and take them apart for cleaning. However, Liebherr recommends using the door racks in the position in the door as delivered from the factory.

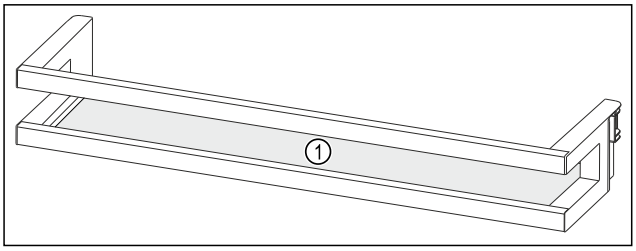

Fig. 84 Example illustration, Door rack
(1) Shelf

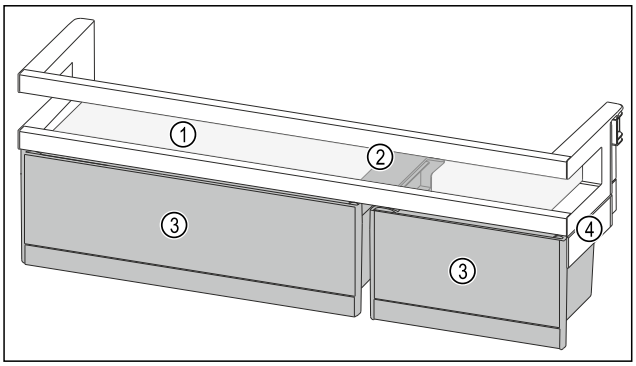

Fig. 85 Example illustration, Door racks with VarioBoxes
(1) Shelf
(2) Holding part for VarioBoxes
(3) VarioBoxes
(4) Side part

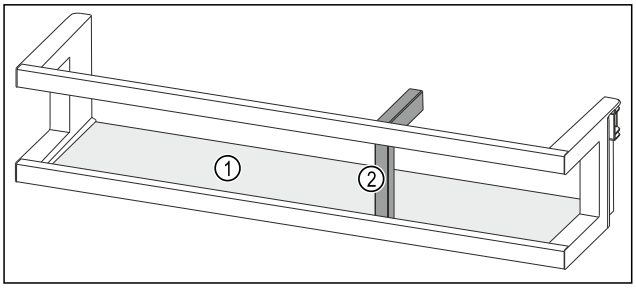

Fig. 86 Example illustration, Door rack with bottle holder
(1) Shelf
(2) Bottle holder

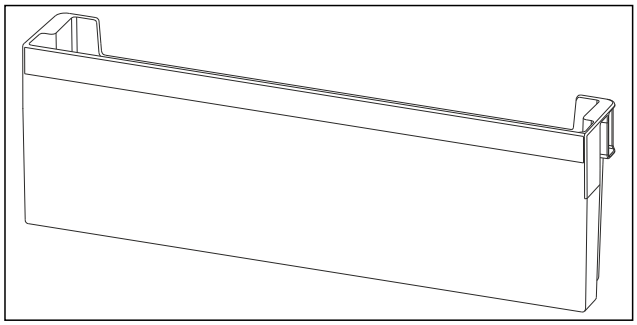

Fig. 87 Example illustration, Door rack

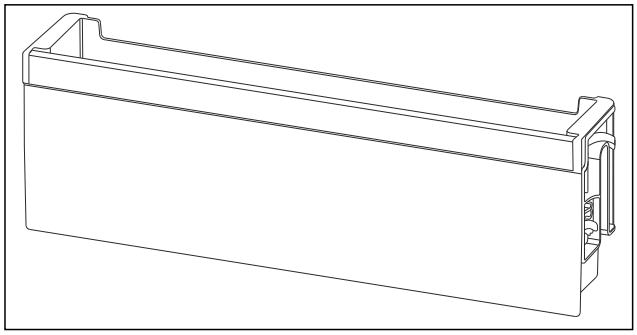

Fig. 88 Example illustration, fold-down door racks

The following table shows examples of what can be stored in each door rack. Do not exceed the maximum loading weight of the door.

Door rack	Food
Door rack (see Fig. 84)	Butter, cheese, tinned food, tubes
Door rack with bottle holder (see Fig. 86)	Bottles The sliding bottle holder secures the bottles in the door rack.
Door rack with VarioBoxes (see Fig. 85)	small food items
Door rack (see Fig. 87)	small food items and packages, tubes, cosmetics
Fold-down door rack (see Fig. 88)	small food items and packages, tubes, cosmetics

8.1.1 Removing VarioBoxes

Either one or both VarioBoxes can be used. If you want to store particularly tall bottles in the door rack under the door rack with VarioBoxes, you can remove one or both VarioBoxes.

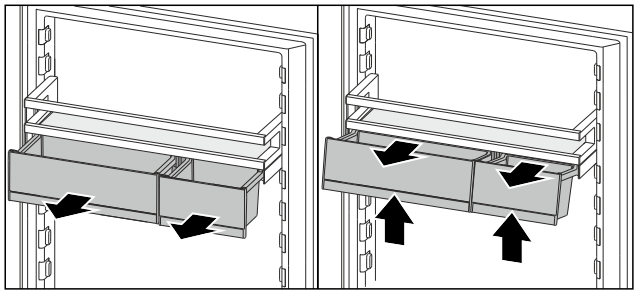

Fig. 89

▶ Pull out VarioBox to the end stop.
▶ Lift VarioBoxes out forwards.
▶ Take VarioBox out forwards.

8.1.2 Removing the door rack

Ensure that the following requirements are met:

❑ VarioBoxes have been removed. (see 8.1.1 Removing VarioBoxes)

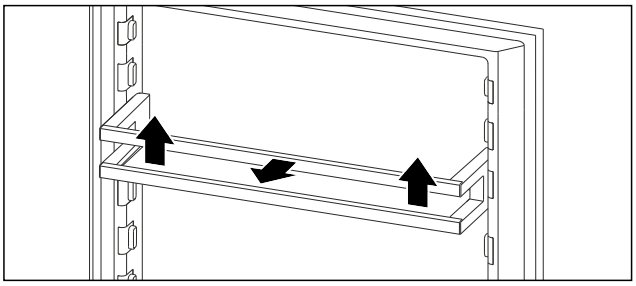

Fig. 90 Example illustration

▶ Push the door rack upwards.
▶ Pull the door rack forward.

8.1.3 Inserting the door rack

Ensure that the following requirements are met:

❑ VarioBoxes have been removed. (see 8.1.1 Removing VarioBoxes)

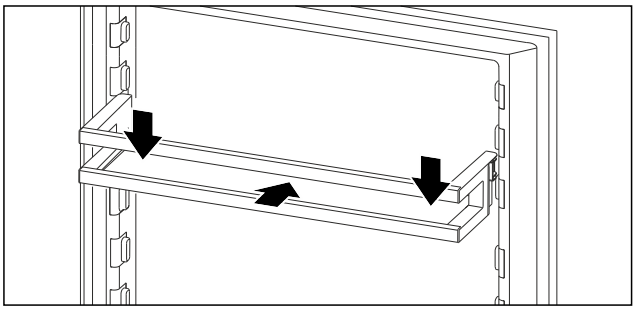

Fig. 91 Example illustration

▶ Slide in the door rack.
▶ Press the door rack down.

8.1.4 Inserting VarioBoxes

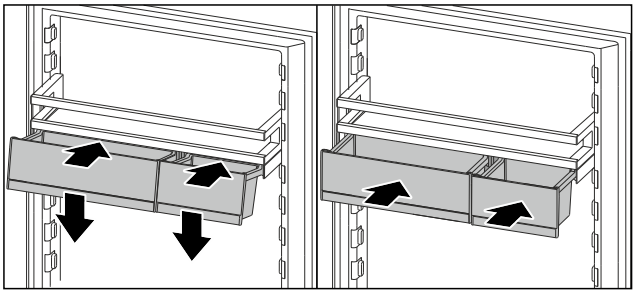

Fig. 92

▶ Place VarioBoxes at an angle on the rib of the door rack.
▶ Lower VarioBoxes.
▶ Push in the VarioBoxes.

8.1.5 Converting VarioBoxes

Ensure that the following requirements are met:

❑ VarioBoxs have been removed. (see 8.1.1 Removing VarioBoxes)
❑ Door rack has been removed. (see 8.1.2 Removing the door rack)

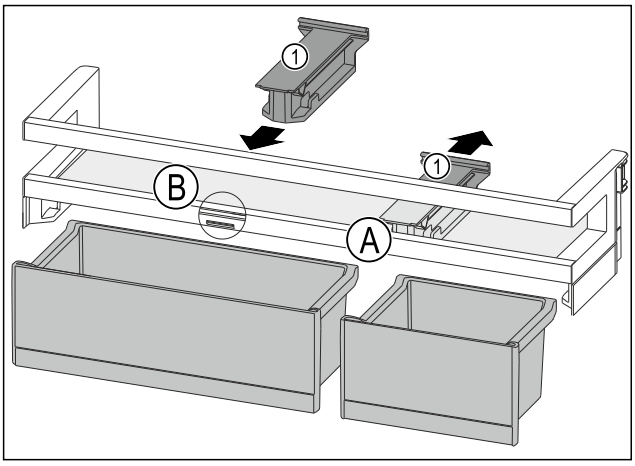

Fig. 93

▶ Take off the holding part *Fig. 93 (1)* in position *Fig. 93 (A)* backwards.
▶ Insert the holding part *Fig. 93 (1)* in position *Fig. 93 (B)*.
▶ Insert the door rack. (see 8.1.3 Inserting the door rack)

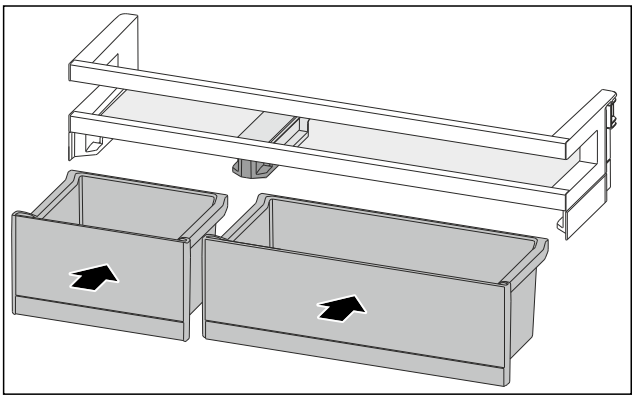

Fig. 94

▶ Insert the VarioBoxes in reverse order. (see Fig. 94)

8.2 Shelves

8.2.1 Adjusting/removing the shelves

The shelves are prevented from being pulled out accidentally by pull out stops.

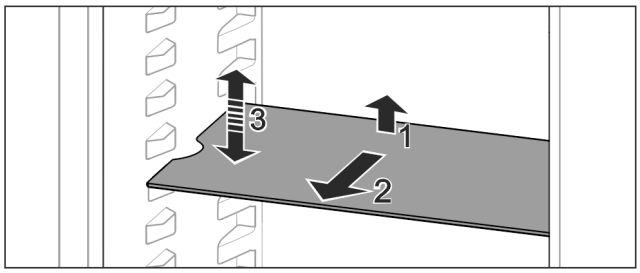

Fig. 95

▶ Lift the shelf and pull forward.
▷ Line up the side runner.
▶ Adjust the height of the shelf: Lift or lower it to the desired height and slide it in.

-or-

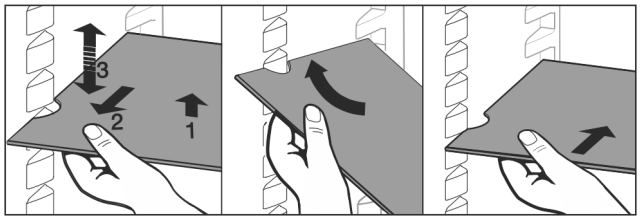

Fig. 96

▶ Remove the shelf completely: Pull it out to the front.

▶ Easier removal: Set the shelf at an angle.
▶ Insert the shelf again: Slide it in all the way.
▷ The pull-out stoppers point downwards.
▷ The pull-out stoppers are behind the front support.

8.3 Dividing shelf

8.3.1 Using the dividing shelf

The shelves are prevented from being pulled out accidentally by pull out stops.

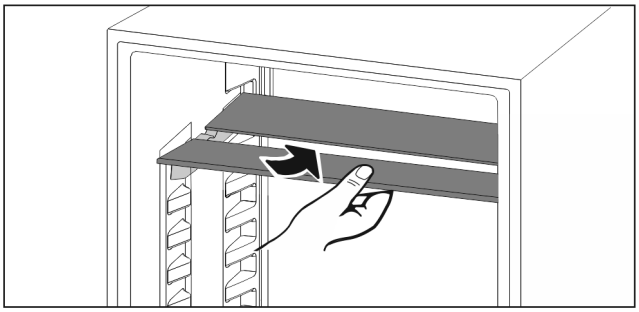

Fig. 97

▶ Push the dividing shelf underneath as shown.

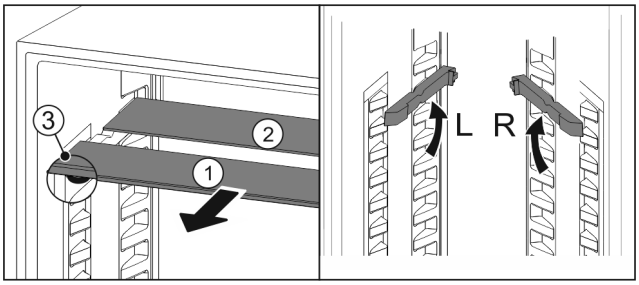

Fig. 98

Adjusting the height:

▶ Pull the glass panels out *Fig. 98 (1)* from the front, one at a time.
▶ Release the support rails and click in at the height you want.
▶ Slide in the glass panels one at a time.
▷ Flat pull-out stoppers at the front, right behind the support rails.
▷ High pull-out stoppers at the back.

Using both shelves:

▶ Hold the glass panel with one hand and pull it to the front.
▷ The glass panel *Fig. 98 (1)* and trim strip are at the front.
▷ The stops *Fig. 98 (3)* point down.

8.4 VarioSafe

The VarioSafe offers space in the refrigerator compartment for small groceries, packages, tubes and jars, for example.

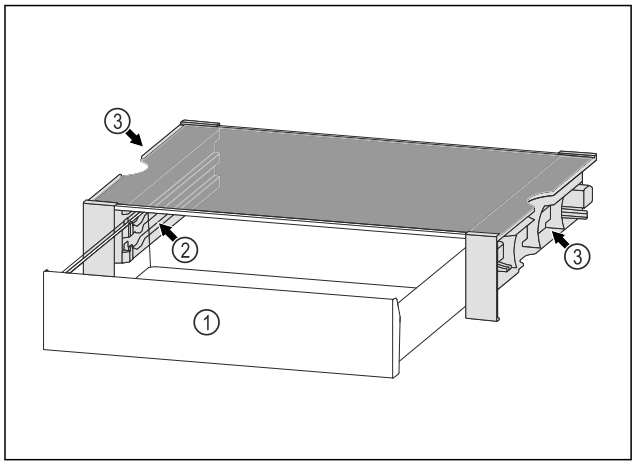

Fig. 99

(1) VarioSafe drawer

(2) Side panels with ribs for VarioSafe drawer

(3) Recesses on the left and right side panel

8.4.1 Inserting the VarioSafe

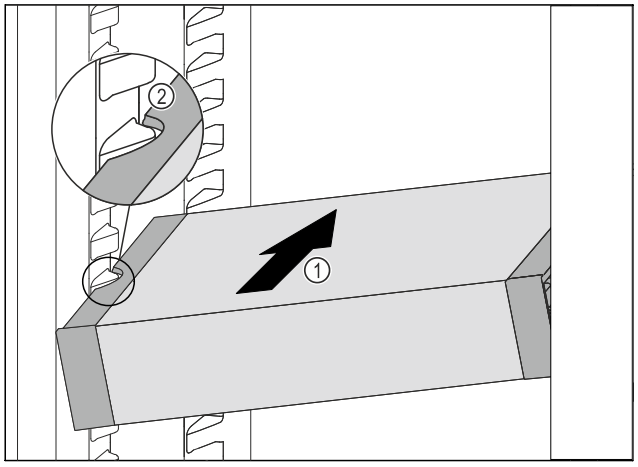

Fig. 100

▶ Insert the VarioSafe into the fridge section at an angle *Fig. 100 (1)* until the recesses in the side *Fig. 100 (2)* of the VarioSafe are at the level of the support rib in the fridge section.

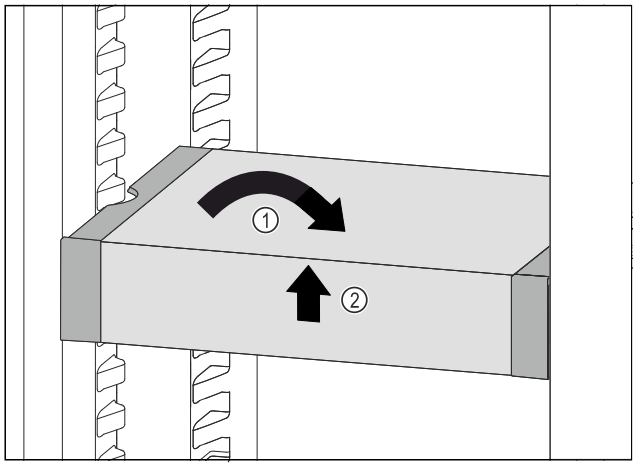

Fig. 101

▶ Set VarioSafe straight. *Fig. 101 (1)*

▶ Lift VarioSafe at the front. *Fig. 101 (2)*

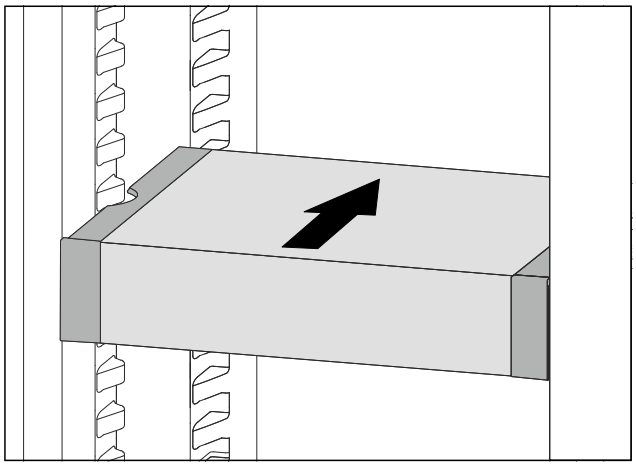

Fig. 102

▶ Lift VarioSafe up toward the front.

▶ Push VarioSafe in to the rear.

▶ Lower VarioSafe.

▷ VarioSafe audibly engages.

▷ VarioSafe is inserted.

8.4.2 Repositioning the VarioSafe

You can move the VarioSafe as a whole in the refrigerator compartment.

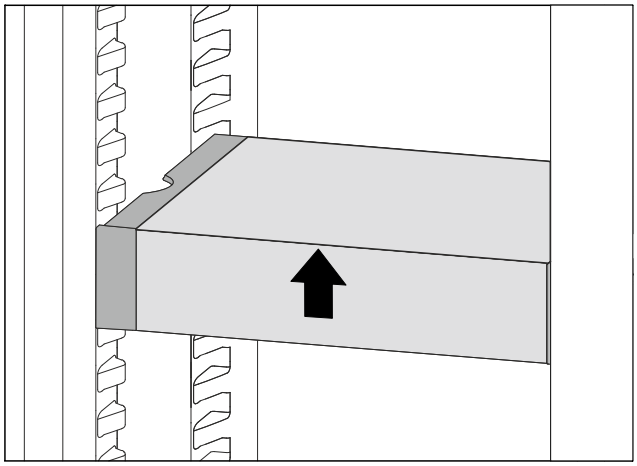

Fig. 103

▶ Lift VarioSafe at the front.

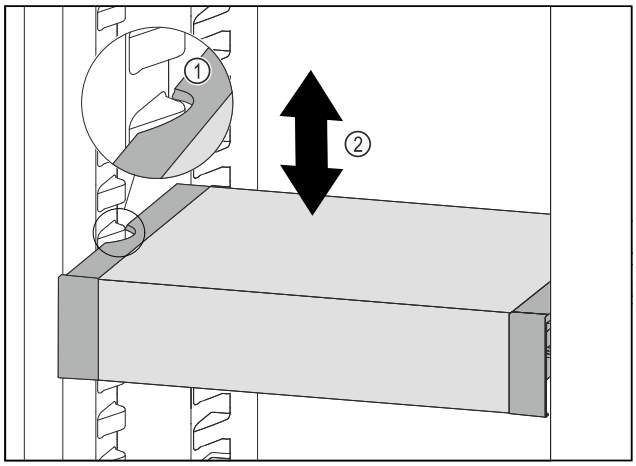

Fig. 104

▶ Pull VarioSafe forwards until the recesses in the side of the VarioSafe are at the level of the support rib in the refrigerator compartment. *Fig. 104 (1)*

▶ Move VarioSafe up or down in the refrigerator compartment until the desired height is reached. *Fig. 104 (2)*

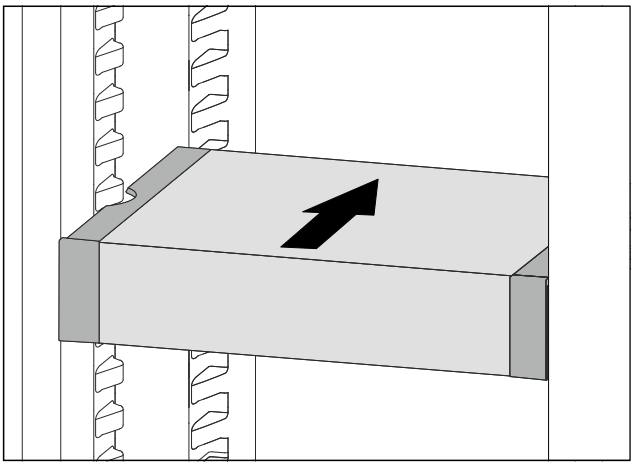

Fig. 105

▶ Lift VarioSafe at the front.
▶ Push VarioSafe in to the rear.
▷ VarioSafe audibly engages.
▷ VarioSafe is offset in height.

8.4.3 Moving the VarioSafe drawer

You can use the VarioSafe drawer at two different heights. If you would like to store taller foodstuffs in the VarioSafe drawer, slide the VarioSafe drawer in on the bottom rib. If you would like to store smaller foodstuffs in the VarioSafe drawer, slide the VarioSafe drawer in on the top rib.

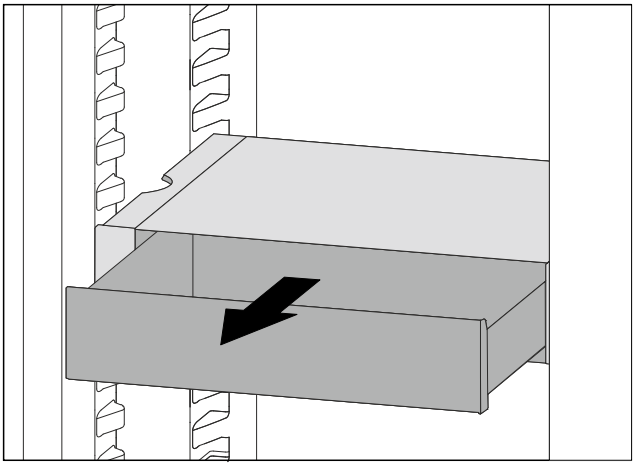

Fig. 106

▶ Pull out the VarioSafe drawer as far as it will go.
▶ Lift the VarioSafe drawer up at the front.
▶ Remove the VarioSafe drawer to the front.

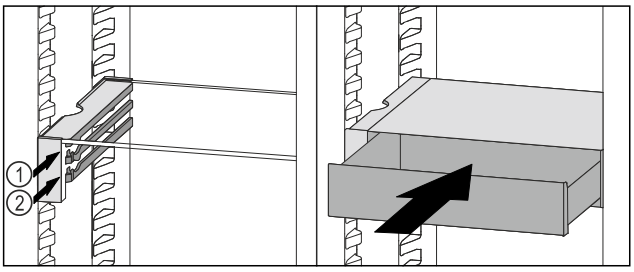

Fig. 107

▶ Lift the VarioSafe drawer up at the front.
▶ Place the VarioSafe drawer behind the stoppers on desired rib *Fig. 107 (1)* or *Fig. 107 (2)*.
▷ VarioSafe drawer is offset in height.

8.4.4 Removing the VarioSafe

You can remove the VarioSafe as a whole.

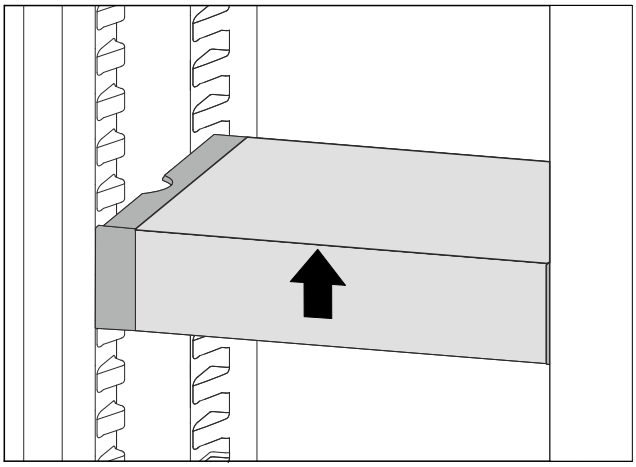

Fig. 108

▶ Lift VarioSafe at the front.

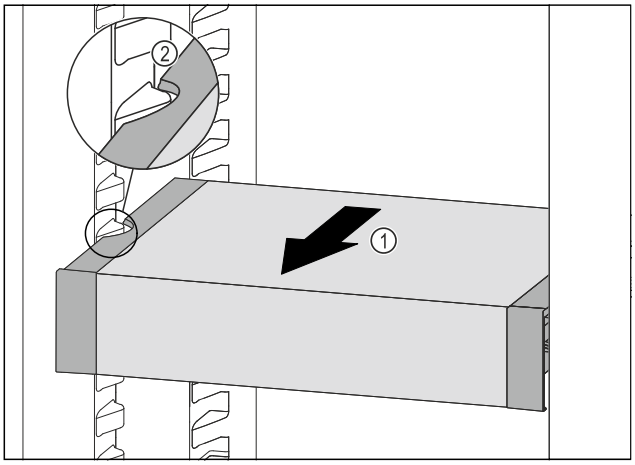

Fig. 109

▶ Pull VarioSafe forwards *Fig. 109 (1)* until the recesses in the side of the VarioSafe are at the level of the support rib in the fridge section. *Fig. 109 (2)*

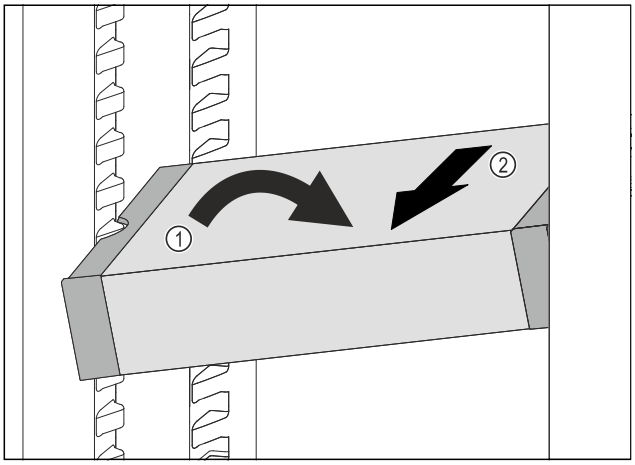

Fig. 110

▶ Set VarioSafe in refrigerator compartment at an angle. *Fig. 110 (1)*
▶ Take VarioSafe out to the front. *Fig. 110 (2)*
▷ VarioSafe is removed.

8.4.5 Disassembling the VarioSafe

You can disassemble the VarioSafe into its individual parts if you want to clean the VarioSafe or if you need to install or remove parts.

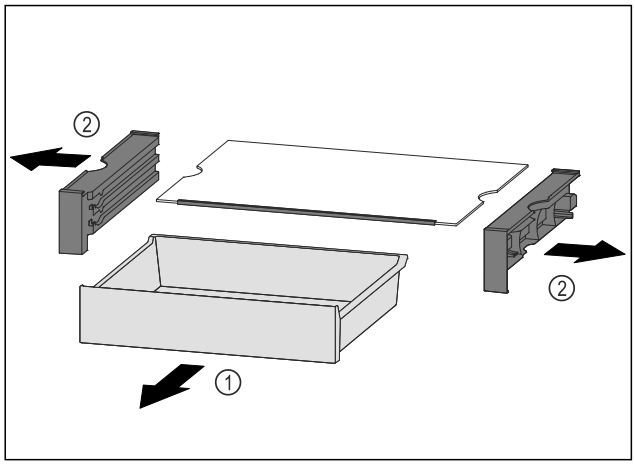

Fig. 111

▶ Remove VarioSafe as a whole. (see 8.4.4 Removing the VarioSafe)
▶ Disassemble VarioSafe according to the illustration.

8.5 Adjustable bottle shelf

Either the glass shelf or the variable bottle rack can be used in the bottom section of the refrigerator. The glass shelf is inserted at delivery.

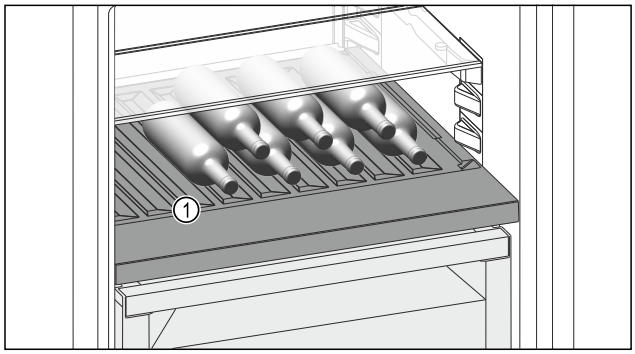

Fig. 112 Example illustration
(1) Variable bottle rack

8.5.1 Using the variable bottle rack

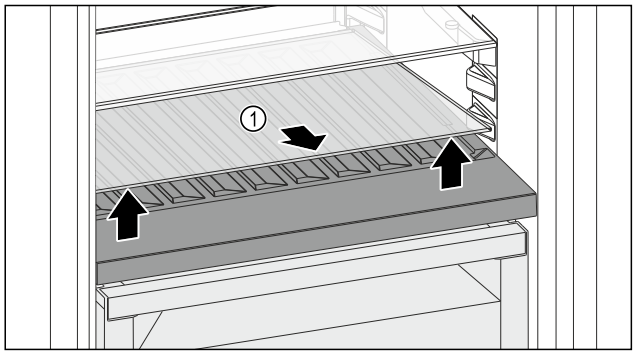

Fig. 113

▶ Lift the glass shelf *Fig. 113 (1)* at the front and remove.
▶ Store the glass shelf *Fig. 113 (1)* in a safe place outside the appliance.
▶ Insert the glass shelf *(2)* under the variable bottle rack.

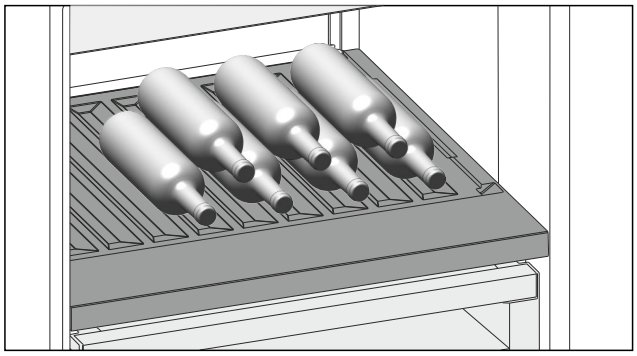

Fig. 114 Example illustration

▶ Place bottles in the back row with their bases against the back wall. (see Fig. 114)

Note
When the bottles protrude over the variable bottle rack at the front:
▶ Set the lower door rack one position higher.

8.5.2 Using the glass shelf

Ensure that the following requirements are met:

❑ Bottles have been removed.
❑ Variable bottle rack has been cleaned.
(see 9.5 Removing / inserting the variable bottle rack)
(see 9.8.3 Clean the components)

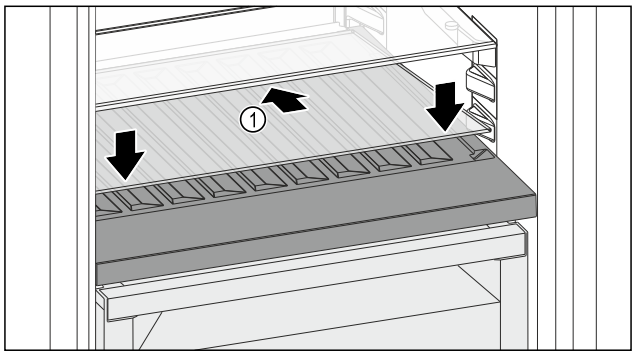

Fig. 115

▶ Place the glass shelf *Fig. 115 (1)* at an angle, sloping it downwards and backwards.
▶ Lower the glass shelf *Fig. 115 (1)* at the front.

8.6 Drawers

You can remove the drawers for cleaning.

The way to remove/insert the drawers varies depending on the pull-out system. Your appliance can contain various pull-out systems.

Note
The energy consumption increases and the cooling power goes down if ventilation is not sufficient.
▶ Always keep the inside vents at the rear wall clear.

8.6.1 Drawer on telescopic rails

The drawer runs on extendible rails (telescopic rails). There are fully extendible telescopic rails and telescopic rails with partial pull-out. Drawers which are fully extendible can be pulled out fully from the appliance. Drawers with partial pull-out cannot be removed fully from the appliance. The system in your appliance depends on the type of appliance.

Fully extendible*

If you have fully extendible rails, there is a clamp located at the back on the left and right of the rail.

Removing drawer

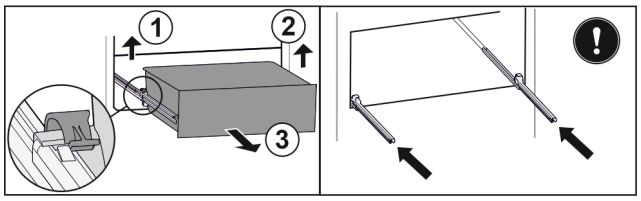

Fig. 116

▶ Pull out drawer as far as it will go.
▶ Lift left clamp and simultaneously pull drawer forwards on the left. *Fig. 116 (1)*
▶ Lift right clamp and simultaneously pull drawer forwards on the right. *Fig. 116 (2)*
▶ Remove drawer to the front. *Fig. 116 (3)*
▶ Slide rails in.

Inserting drawer

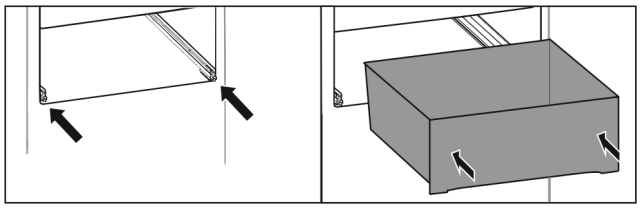

Fig. 117

▶ Slide rails in.
▶ Place drawer on rails.
▶ Slide in drawer to the back.
▷ Drawer latches in audibly at the back.

Partial pull-out fridge compartment*

Removing drawer

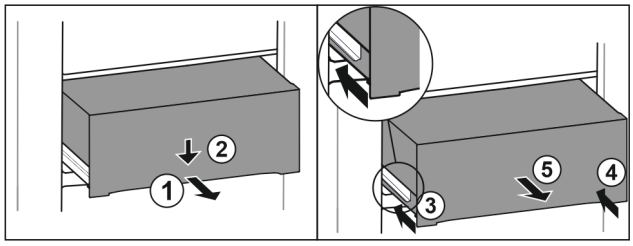

Fig. 118

▶ Pull out drawer half-way. *Fig. 118 (1)*
▶ Push the drawer down at the front. *Fig. 118 (2)*
▶ Push the left rail in by about 2 cm. *Fig. 118 (3)*
▶ Push the right rail in by about 2 cm. *Fig. 118 (4)*
▶ Remove drawer to the front. *Fig. 118 (5)*

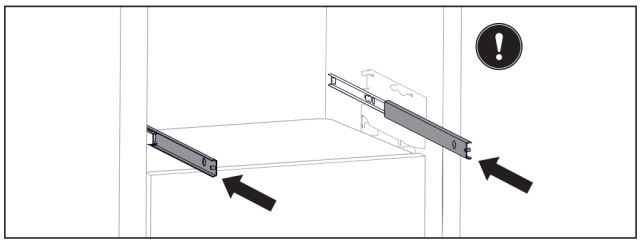

Fig. 119

If the rails are not yet fully inserted after removing the drawer:

▶ Push rails in completely.

Inserting drawer

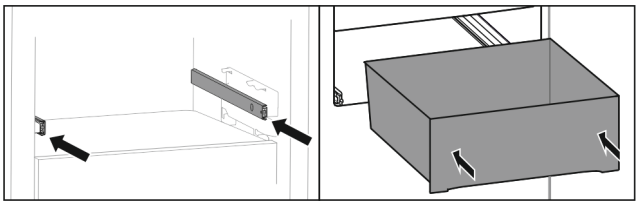

Fig. 120

▶ Slide rails in.
▶ Place drawer on rails.
▶ Slide in drawer to the back.

8.7 Compartment lid for Fruit & Vegetable Safe

The compartment lid ensures constant levels of humidity.

The compartment lid is directly on the drawer and can be covered by shelves or additional drawers.

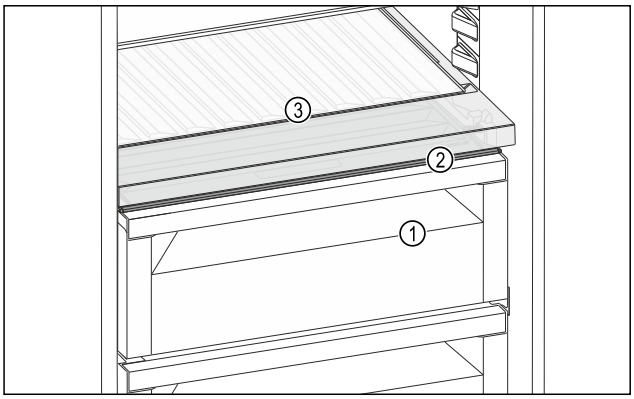

Fig. 121 Example illustration, compartment lid for Fruit & Vegetable Safe

(1) Fruit & Vegetable Safe
(2) Compartment lid for Fruit & Vegetable Safe
(3) Variable bottle rack

8.7.1 Reducing the air humidity in the drawer

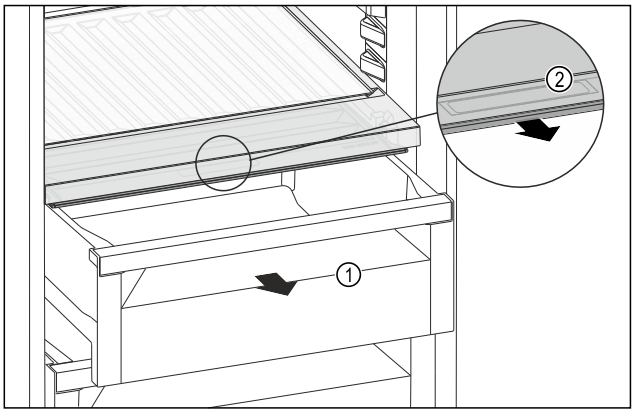

Fig. 122

▶ Pull out the drawer *Fig. 122 (1)*.
▶ Grasp the recessed grip *Fig. 122 (2)* on the compartment lid and pull the compartment lid forwards at the same time.
▷ When the drawer is closed, there is a small gap between the compartment lid and the drawer.
▷ Using HydroBreeze is not possible. (see 8.8 HydroBreeze)

8.7.2 Increasing the air humidity in the drawer

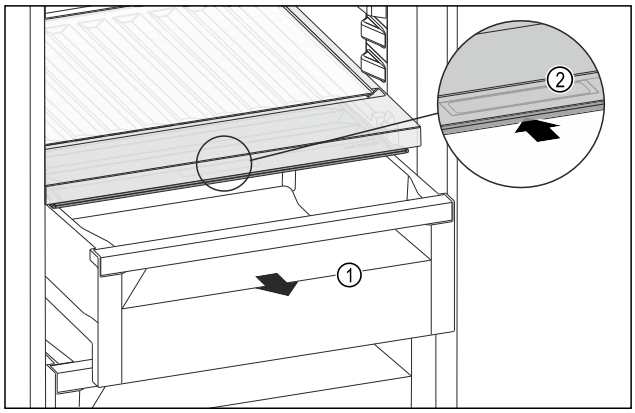

Fig. 123

▶ Pull out the drawer *Fig. 123 (1)*.
▶ Grasp the recessed grip *Fig. 123 (2)* on the compartment lid and push the compartment lid backwards at the same time.
▷ When the drawer is closed, the compartment lid seals with the drawer.
▷ Using HydroBreeze is possible. (see 8.8 HydroBreeze)

8.7.3 Using Fruit & Vegetable Safe as Meat & Dairy Safe

You can use the Fruit & Vegetable Safe as Meat & Dairy Safe. To do this, you must reduce the humidity in the drawer. (see 8.7.1 Reducing the air humidity in the drawer)

8.7.4 Using Fruit & Vegetable Safe with HydroBreeze

You can use the Fruit & Vegetable Safe with HydroBreeze. To do this, you must increase the humidity in the drawer. (see 8.7.2 Increasing the air humidity in the drawer)

8.8 HydroBreeze

HydroBreeze emits a mist over the refrigerated goods to provide moisture every time the door is opened.

The HydroBreeze and its water tank are located in the adjustable bottle shelf.

Ensure that the following conditions are met:

- The water tank is clean. (see 9.8.3 Clean the components)
- The water tank is properly engaged.
- The humidity in the drawer is set to high air humidity. (see 8.7.2 Increasing the air humidity in the drawer)
- HydroBreeze is activated. (see HydroBreeze)

8.8.1 Fill the water tank

WARNING
Unclean water!
Contaminants.
▶ Only fill with drinking water.
▶ The HydroBreeze is off: empty water tank.
▶ The HydroBreeze is no longer in use: empty water tank.

NOTICE
Sugar-content liquids!
Damage to HydroBreeze.
▶ Only fill with drinking water.

Note
Only use filtered, decarbonised water for the best quality drinking water and to make the HydroBreeze, work smoothly.
This water quality can be achieved using a table water filter of the kind available in trade retail outlets.
▶ Only ever fill the water tank with filtered, decarbonised drinking water.

The water tank is built into the adjustable bottle shelf (see 2.2 Overview of the appliance and equipment) .

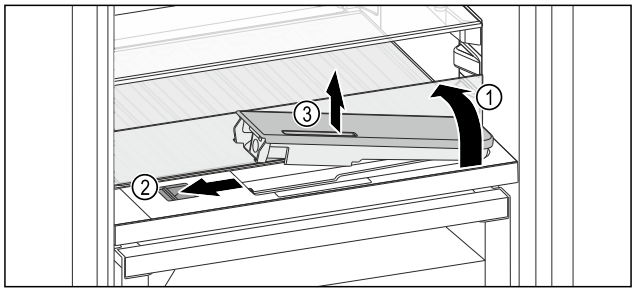

Fig. 124

▶ Press on the back-left corner of the front glass plate.
▷ The glass panel folds up at the front.
▶ Lift the glass panel and fold towards the rear until it clicks into place *Fig. 124 (1)*.
▷ Glass panel stands upright.
▶ Slide the slider *Fig. 124 (2)* to the left.
▷ The water tank jumps out of its recess.
▶ Remove the water tank *Fig. 124 (3)*.
▶ Cleaning the water tank (see 9.8.3 Clean the components) .
Square opening:
▶ Fill with drinking water up to the marker.
▶ Insert the water tank into the recess, bottom first.
▶ Slowly lower the front part and push the tank in.
▷ The water tank is clicked into place.

8.8.2 Dismantling the water tank

You can remove the HydroBreeze water tank for cleaning.

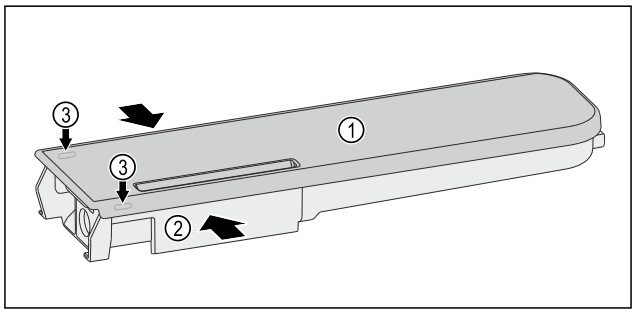

Fig. 125

▶ Push the water tanks *Fig. 125 (2)* together, leverage the cover *Fig. 125 (1)* carefully over the latching tabs *Fig. 125 (3)* and lift it up.
▷ The cover is released.

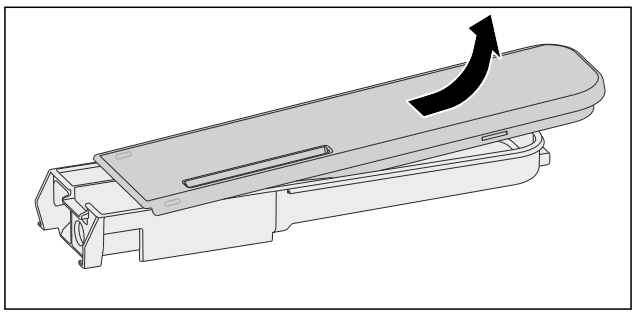

Fig. 126

▶ Move the cover *Fig. 125 (1)* slightly forwards and back, and remove to the top.
▷ The water tank has been dismantled.

8.9 Butter dish

8.9.1 Opening/closing the butter dish

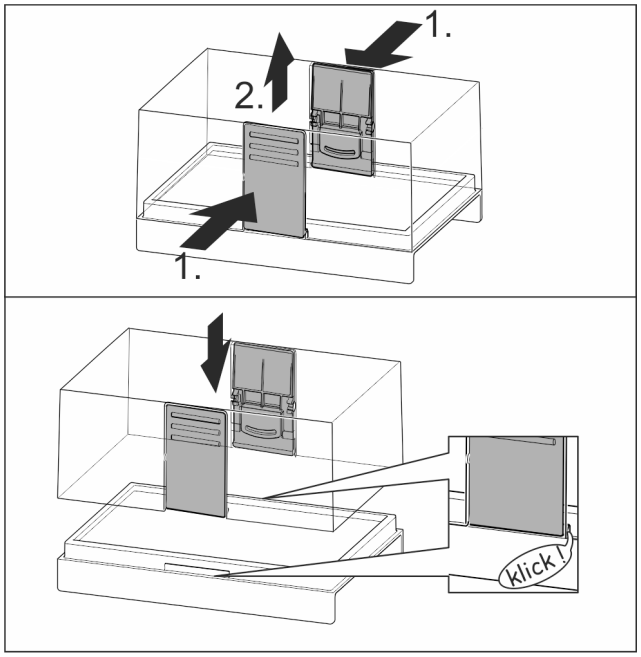

Fig. 127

8.9.2 Dismantling the butter dish

You can take the butter dish apart for cleaning.

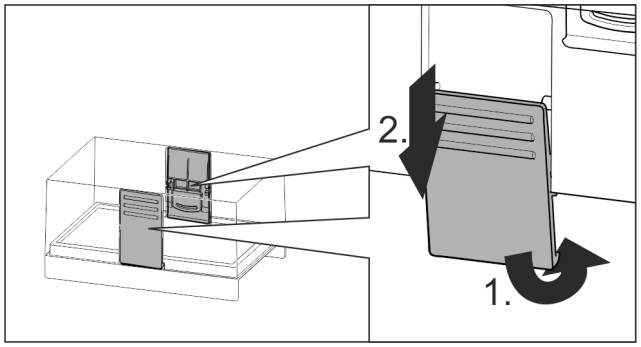

Fig. 128
▶ Disassembling the butter dish.

8.10 Egg rack

You can pull out and turn the egg rack. You can use both sides of the egg rack so you can label specifics like the purchase date.

8.10.1 Using the egg rack

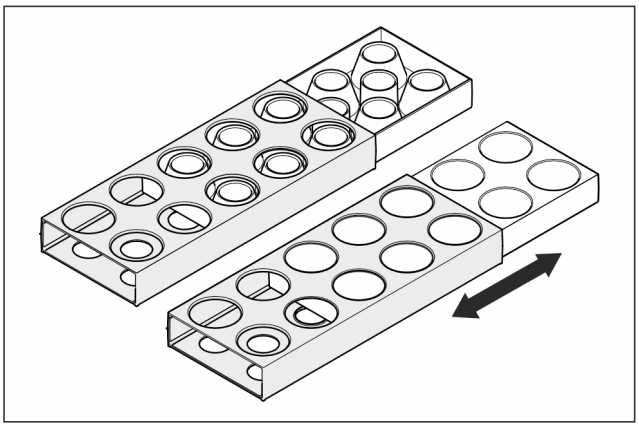

Fig. 129
▶ Top layer: for storing hen eggs.
▶ Bottom layer: for storing quail eggs.

8.11 Bottle holder

8.11.1 Using the bottle holder

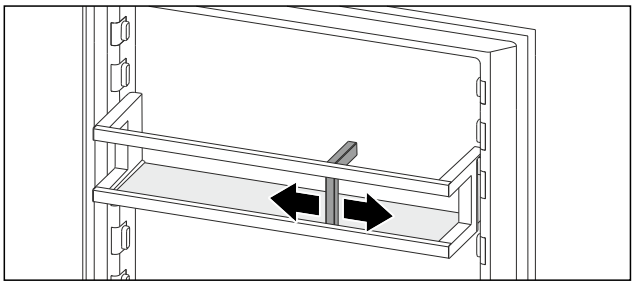

Fig. 130
▶ Push the bottle holder onto the bottles.
▷ The bottles are prevented from falling over.

8.12 FlexSystem

8.12.1 Using the FlexSystem

The FlexSystem helps you store and organise your food in a clear and flexible way. It lets you clearly divide your food into fruit, vegetables or by use-by dates, for example.

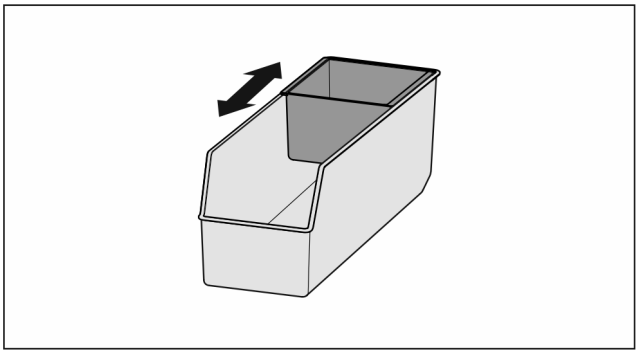

Fig. 131
▶ Move the inner shell.

8.12.2 Removing the FlexSystem

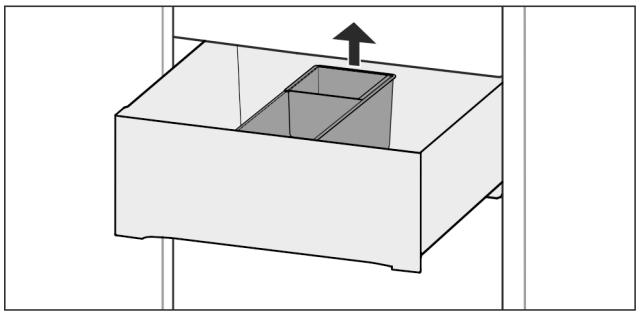

Fig. 132

▶ Lift the FlexSystem from the back.
▶ Pull up and out.

8.12.3 Inserting the FlexSystem

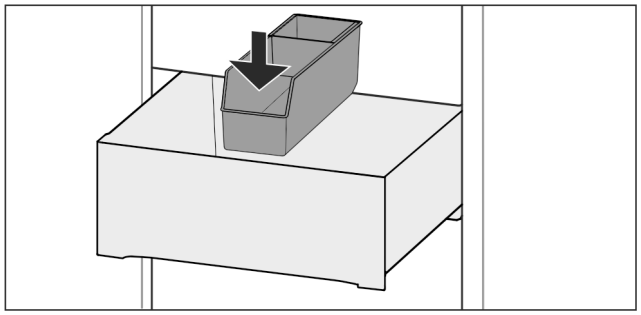

Fig. 133

▶ Insert the FlexSystem front-first.
▶ Lower the rear part.

8.12.4 Disassembling the FlexSystem

You can take the FlexSystem apart for cleaning.

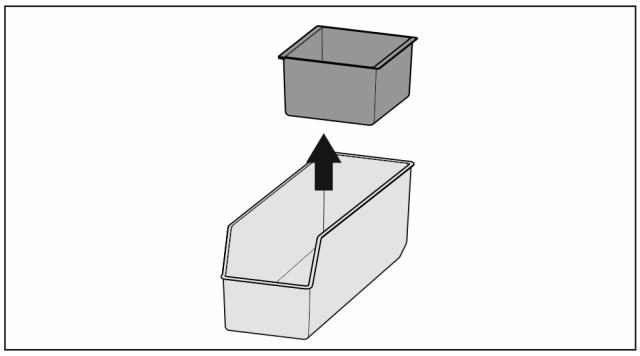

Fig. 134

▶ Disassembling the FlexSystem

8.13 FlexCube

The FlexCube has different sized openings, so you can store small items such as tubes, open yoghurt pots or quail eggs in it. The FlexCube fits into all Liebherr door racks, for example. If necessary, you can also set up several Flex-Cubes next to each other.

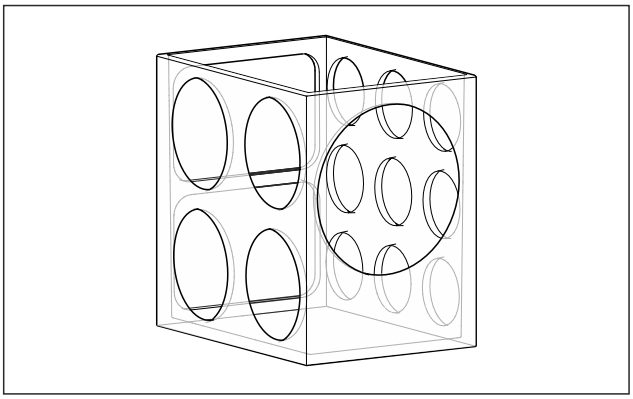

Fig. 135 Example illustration

Note
These accessories can be purchased from the Liebherr-Hausgeräte shop at home.liebherr.com/shop/de/deu/zubehor.html.

8.13.1 Using the FlexCube

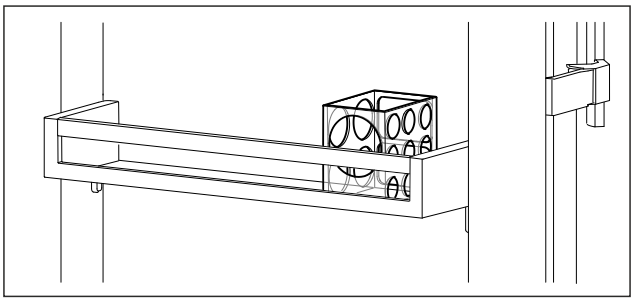

Fig. 136 Example illustration

▶ Insert the FlexCube in the door rack.

-or-

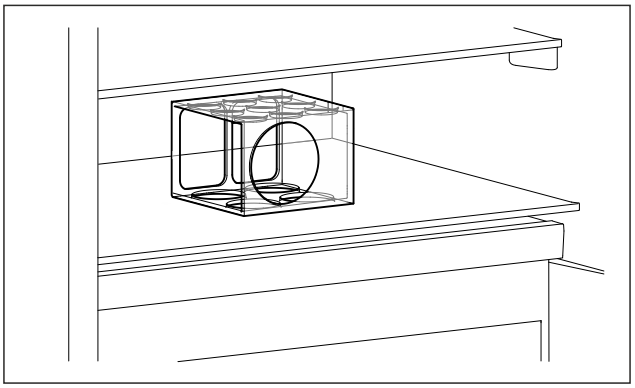

Fig. 137 Example illustration

▶ Place FlexCube on shelf.

▶ Sort small parts into the FlexCube for storage.

9 Maintenance

9.1 FreshAir carbon filter

The FreshAir carbon filter is in the compartment above the fan.

It guarantees the best air quality.

- ❑ Replace the carbon filter every 6 months.
  When the reminder is set, a message on the display prompts you to change it.
- ❑ The carbon filter can be disposed of with the regular household waste.

Note
FreshAir activated charcoal filters can be purchased from the Liebherr-Hausgeräte store at home.liebherr.com/shop/de/deu/zubehor.html.

9.1.1 Removing the FreshAir carbon filter

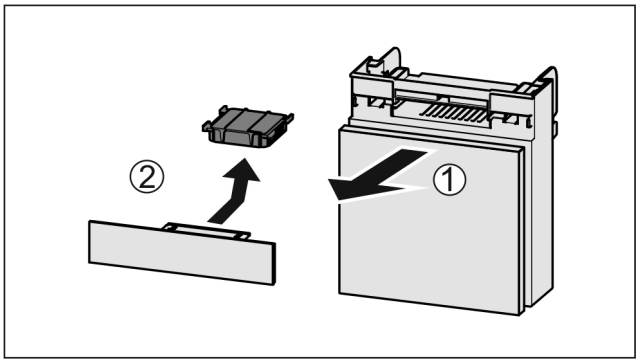

Fig. 138

▶ Pull out the compartment *Fig. 138 (1)*.
▶ Remove the carbon filter *Fig. 138 (2)*.

9.1.2 Inserting the FreshAir carbon filter

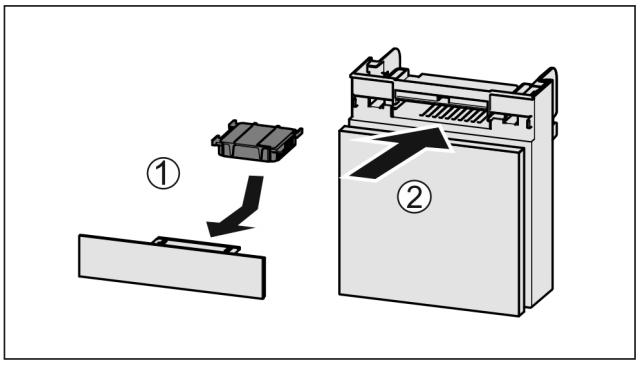

Fig. 139

▶ Insert the carbon filter as shown in the diagram *Fig. 139 (1)*.
▷ The carbon filter clicks into place.
If the carbon filter is pointing downwards:
▶ Push the compartment in *Fig. 139 (2)*.
▷ The carbon filter is now ready for use.

9.2 Dismantling the door rack

It is possible to dismantle some of the door racks if you want to clean them or install or remove spare parts.

9.2.1 Dismantling the door rack

Ensure that the following requirements are met:

❑ Door rack has been removed. (see 8.1.2 Removing the door rack)

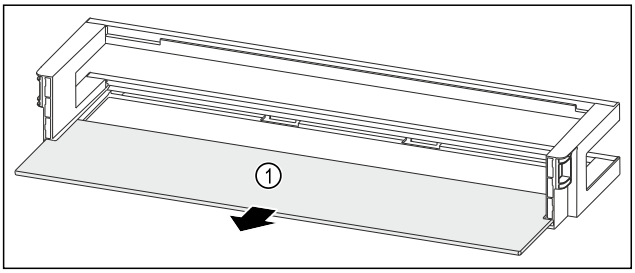

Fig. 140 Door rack with shelf

▶ Remove the shelf *Fig. 140 (1)*.

9.2.2 Dismantling the door rack with Vario-Boxes

Ensure that the following requirements are met:

❑ Door rack has been removed. (see 8.1.2 Removing the door rack)

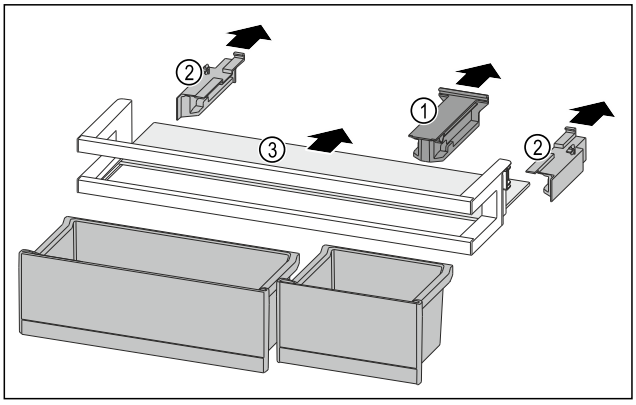

Fig. 141

▶ Remove the VarioBoxes. (see 8.1.1 Removing VarioBoxes)
▶ Pull off the holding part *Fig. 141 (1)*.
▶ Pull off the side parts *Fig. 141 (2)*.
▶ Remove the shelf *Fig. 141 (3)*.

9.2.3 Dismantling the door rack with bottle holder

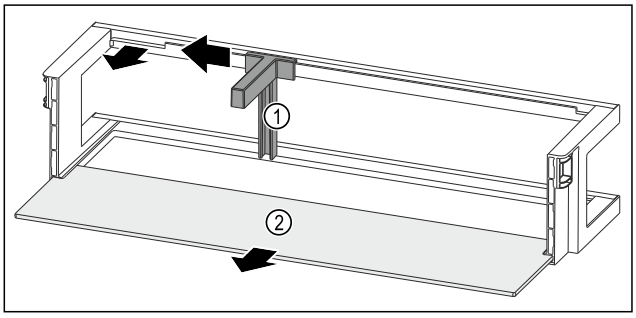

Fig. 142 Door rack with bottle holder and shelf

▶ Slide the bottle holder *Fig. 142 (1)* to the side as far as the recess.
▶ Remove the bottle holder *Fig. 142 (1)*.
▶ Remove the shelf *Fig. 142 (2)*.

9.2.4 Dismantling the fold-down door rack

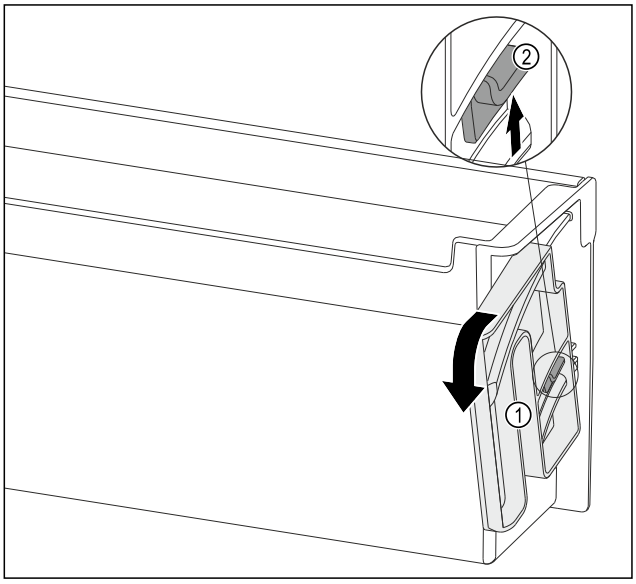

Fig. 143

▶ Turn the turning unit *Fig. 143 (1)* in the specified direction to the end stop.
▶ Press the tab *Fig. 143 (2)* up and remove the turning unit *Fig. 143 (1)*.

9.3 Assembling the door rack

9.3.1 Assembling the door rack

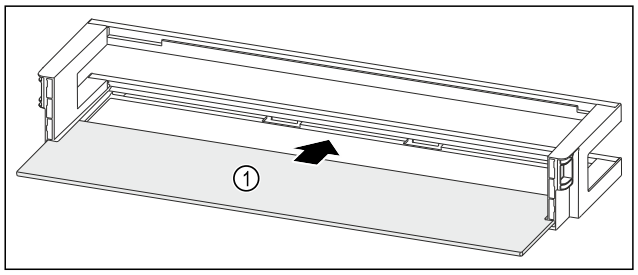

Fig. 144 Door rack with shelf

▶ Push the shelf *Fig. 144 (1)* into the side recesses.

9.3.2 Assembling the door rack with VarioBoxes

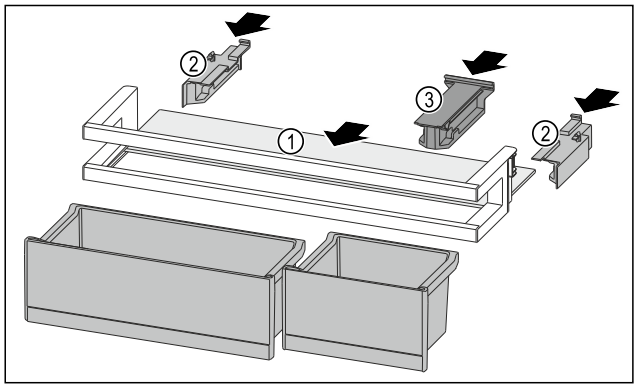

Fig. 145

▶ Push the shelf *Fig. 145 (1)* into the side recesses.
▶ Insert the side parts *Fig. 145 (2)*.
▶ Insert the holding part *Fig. 145 (3)*.
▶ Insert the VarioBoxes. (see 8.1.4 Inserting VarioBoxes)

9.3.3 Assembling the door rack with bottle holder

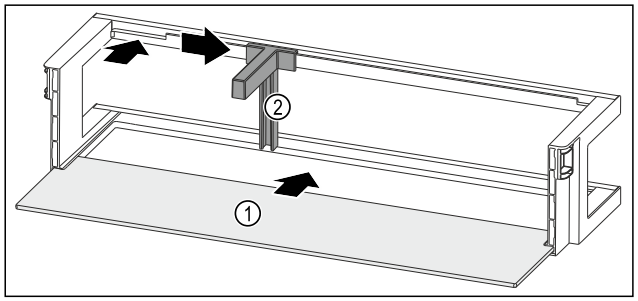

Fig. 146 Door rack with shelf

▶ Push the shelf *Fig. 146 (1)* into the side recesses.
▶ Insert the bottle holder *Fig. 146 (2)* in the recess.
▶ Push the bottle holder *Fig. 146 (2)* to the desired position to the side.

9.3.4 Assembling the fold-down door rack

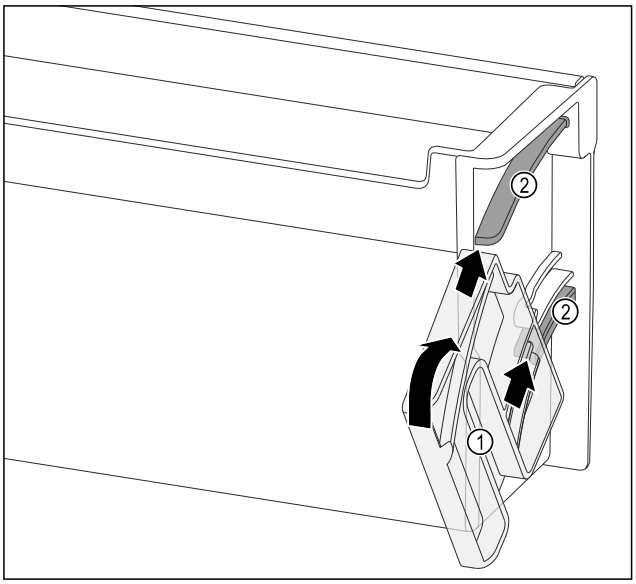

Fig. 147

▶ Position the turning unit *Fig. 147 (1)* so that the recesses are exactly opposite the guide channels *Fig. 147 (2)* of the door rack.
▶ Turn the turning unit *Fig. 147 (1)* towards the specified direction.

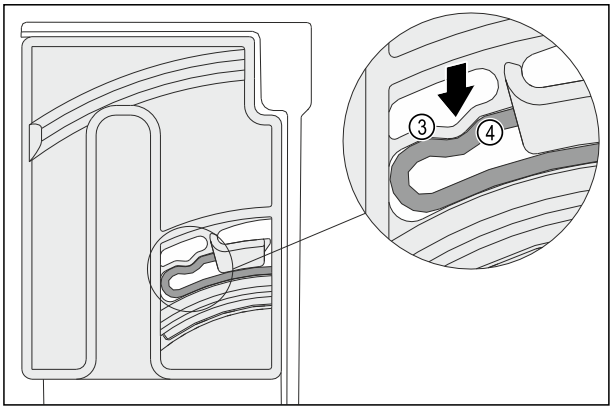

Fig. 148

▷ The elastic element *Fig. 148 (3)* of the turning unit audibly engages in the round shape of the rib *Fig. 148 (4)*.

9.4 Disassembling / assembling pull-out systems

9.4.1 Notes on disassembly

You can disassemble some of the pull-out systems for cleaning. Your appliance can contain a variety of pull-out systems.

The following pull-out systems can be disassembled or cannot be disassembled:

Pull-out system	can be disassembled / cannot be disassembled
Fully extendible*	cannot be disassembled*
Fridge section partial pull-out*	cannot be disassembled*

9.5 Removing / inserting the variable bottle rack

The variable bottle rack can be removed for cleaning.

9.5.1 Removing the variable bottle rack

Ensure that the following requirements are met:

- ❑ Bottles have been removed.
- ❑ Glass shelf has been removed. (see 8.5.1 Using the variable bottle rack)

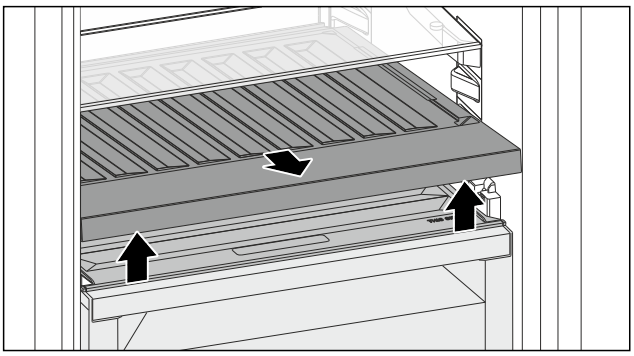

Fig. 149

- ▶ Lift the variable bottle rack at the front and pull it out.
- ▷ The compartment lid is visible.

Note
Liebherr recommends:
Do not place any items on the compartment lid below.

9.5.2 Inserting the variable bottle rack

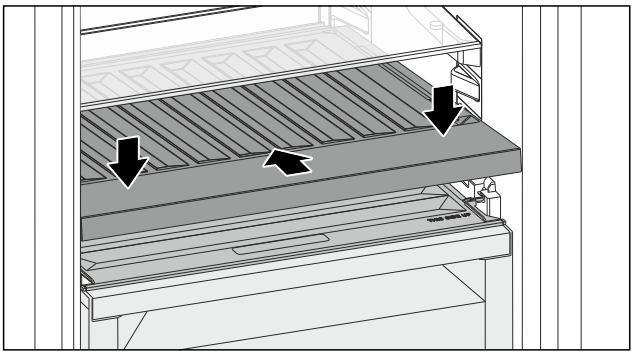

Fig. 150

- ▶ Push the variable bottle rack in to the end stop and press it down.
- ▷ The connectors at the back of the variable bottle rack are connected via automated processes.
- ▷ LED lights up.
- ▶ Insert the glass shelf. (see 8.5.2 Using the glass shelf)

-or-

- ▶ Use the variable bottle rack for bottles.

9.6 Compartment lid for Fruit & Vegetable Safe

You can remove the compartment lid for cleaning.

9.6.1 Removing the compartment lid

Ensure that the following requirements are met:

- ❑ The glass shelf directly above the variable bottle rack has been removed.
- ❑ The variable bottle rack has been removed.
- ❑ The drawer directly below the compartment lid has been removed. (see 8.6 Drawers)

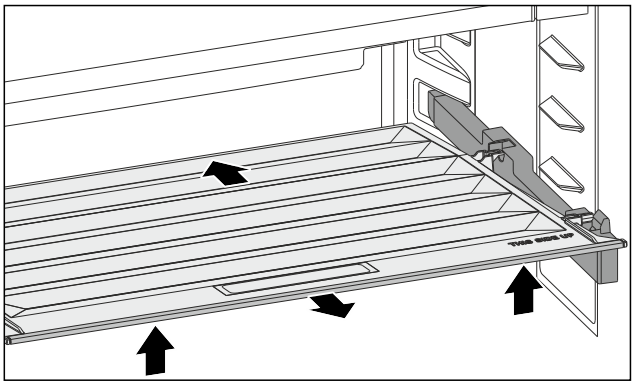

Fig. 151

- ▶ Push the compartment lid backwards.
- ▶ Lift the compartment lid forwards.
- ▶ Remove the compartment lid forwards and upwards at an angle.

9.6.2 Inserting the compartment lid

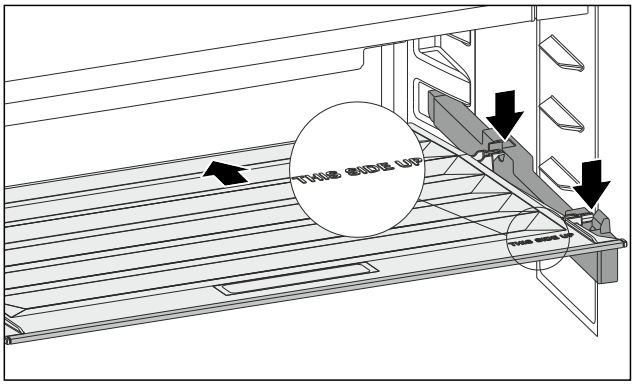

Fig. 152

If the THIS SIDE UP lettering is at the top:

- ▶ Insert the rear retaining parts into the relevant rear openings.
- ▶ Push the compartment lid backwards.
- ▶ Lower the compartment lid forwards and engage the front retaining parts into the openings.
- ▶ Move the compartment lid into the required position.

9.7 Defrosting the appliance

WARNING
Improper defrosting of the appliance!
Injuries and damage.

- ▶ Do not use mechanical equipment or other methods to speed up the defrosting process other than those recommended by the manufacturer.
- ▶ Do not use electrical heating or steam-cleaning appliances, naked flames or defroster sprays to defrost.
- ▶ Do not use sharp objects to remove ice.

Defrosting is performed automatically. The water from the thawing process drains through the outlet and evaporates.

- ▶ Clean the drain opening at regular intervals. (see 9.8 Cleaning the appliance)

9.8 Cleaning the appliance

9.8.1 Ready

WARNING
Danger of electric shock!
▶ Remove the refrigerator connector or interrupt the power supply.

WARNING
Risk of fire
▶ Do not damage the refrigeration circuit.

▶ Empty the appliance.
▶ Remove mains connector.
-or-
▶ Activate CleaningMode. (see CleaningMode)

9.8.2 Cleaning the interior

NOTICE
Improper cleaning!
Damage to the appliance.
▶ Only use soft cleaning cloths and ph-neutral all-purpose cleaners.
▶ Do not uses abrasive sponges or steel wool which may cause scratches.
▶ Do not use any sharp or abrasive cleaning agents, nor any that contain sand, chloride or acid.

▶ Plastic surfaces: clean by hand with a soft clean cloth, lukewarm water and a little detergent.
▶ Metal surfaces: clean by hand with a soft clean cloth, lukewarm water and a little detergent.
▶ Drain hole: remove deposits using a thin item (for example a cotton bud).

9.8.3 Clean the components

NOTICE
Improper cleaning!
Damage to the appliance.
▶ Only use soft cleaning cloths and ph-neutral all-purpose cleaners.
▶ Do not uses abrasive sponges or steel wool which may cause scratches.
▶ Do not use any sharp or abrasive cleaning agents, nor any that contain sand, chloride or acid.

Clean with a soft, clean cloth, lukewarm water and some detergent:

- Shelf
- Dividing shelf
- VarioSafe
- Compartment lid for Fruit & Vegetable Safe
- Drawer
- Adjustable bottle shelf
- FlexSystem

Clean with a damp cloth:

- Retractable rails
  Please note: The grease in the tracks is used for lubrication and must not be removed!

Wash in the dishwasher up to 60 °C:

- Door rack
- VarioBox
- Bottle rack
- Holder of the dividing shelf
- HydroBreeze water tank and water tank lid
- Egg rack
- Butter dish
- FlexCube

▶ To disassemble components: see the relevant section.
▶ Clean the components.

9.8.4 Cleaning the HydroBreeze

Cleaning is required in the following cases:

❑ Initial operation
❑ HydroBreeze is off for more than 48 hours.
❑ Refill the water tank.

Ensure that the following conditions are met:

❑ HydroBreeze is off (see HydroBreeze) .
❑ Water tank has been removed and cleaned in the dishwasher.

▶ Wipe out the recess with a damp cloth.
▶ Insert the water tank.
▶ Activate the HydroBreeze.

9.8.5 After cleaning

▶ Wipe the appliance and the components dry.
▶ Connect and switch on the appliance.
The temperature is cold enough:
▶ Place the food inside.
▶ Repeat cleaning regularly.

10 Customer help

10.1 Technical specifications

Temperature range	
Cooling	3 °C to 9 °C
BioFresh	0 °C to 3 °C
Fish & SeaFood	-2 °C to 0 °C Possible settings : 0 °C | 0 °C -2 °C | 0 °C* -2 °C | -2 °C

10.2 Operating noises

The appliance makes different noises when it is on.

- At **higher temperatures** the appliance uses less energy but works for longer. It is **quieter**.
- At **lower temperatures** the food is cooled faster. It is **louder**.

  Examples:
  - Functions on (see 7.2 Appliance functions)
  - Fan running
  - Food recently added
  - High ambient temperature
  - Door open for a while

Noise	Possible cause	Type of noise
Bubbling and splashing	Coolant flowing into the cooling circuit.	Normal operating noise
Hissing	Coolant sprays into the cooling circuit.	Normal operating noise

* Depending on model and options

Noise	Possible cause	Type of noise
Humming	The appliance is cooling. The volume depends on the cooling output.	Normal operating noise
Suction noises	Soft-closing door is being opened and closed.	Normal operating noise
Humming and rustling	The fan is running.	Normal operating noise
Clicking	Components are switched on and off.	Normal switching noise
Rattling or humming	Valves or flaps are working.	Normal switching noise

Noise	Possible cause	Type of noise	Lifting
Vibration	Improper installation	Defective noise	Check the installation. Level the appliance.

Noise	Possible cause	Type of noise	Lifting
Rattling	Components, items inside the appliance	Defective noise	Secure components. Leave enough space between the items.

10.3 Technical fault

Your appliance is designed and built to ensure it works reliably and has a long service life. In the unlikely event that a fault occurs during operation, please check whether it is due to an operating error. If so, you will be charged for the callout and repair costs even if it falls within the warranty period.

You can fix the following faults yourself.

10.3.1 Appliance function

Defect	Cause	Remedy
The appliance is not working.	→ The appliance is not switched on.	▶ Switch the appliance on.
	→ The power plug is not properly plugged into the socket.	▶ Check the power plug.
	→ There is something wrong with the power outlet fuse.	▶ Check the fuse.
	→ Power cut	▶ Keep the appliance closed.
	→ The IEC socket is not plugged into the appliance correctly.	▶ Check the IEC socket.
Temperature is not cold enough.	→ The appliance door is not closed properly.	▶ Close the appliance door.
	→ Not enough ventilation.	▶ Keep ventilation grille clear, and clean it.
	→ The ambient temperature is too high.	▶ Problem solution: (see 2.4 Appliance range of use)
	→ The appliance was opened too many times or for too long.	▶ Wait to see if the required temperature corrects itself. If not, contact Customer Service. (see 10.4 Customer Service)
	→ The temperature is set incorrectly.	▶ Turn down the temperature and check after 24 hours.
	→ The appliance is too close to a heat source (oven, radiator, etc).	▶ Move the appliance or the heat source.
	→ The appliance was not correctly installed in the recess.	▶ Check if the appliance was installed correctly and that the door closes properly.
The door seal is defective or needs to be replaced for another reason.	→ The door seal can be replaced. It can be replaced without the need for special tools.	▶ Contact Customer Service. (see 10.4 Customer Service)
The appliance builds up too much ice or condensation.	→ The door seal may have slipped out of its groove.	▶ Check that the door seal is well fitted in the groove.

10.3.2 Features

Defect	Cause	Remedy
HydroBreeze is not keeping refrigerated goods moist.	→ The HydroBreeze is not on.	▶ Activate the HydroBreeze.
	→ There is not enough water in the water tank.	▶ Fill the water tank.
	→ There is dirt in front of the concentrator.	▶ Clean the HydroBreeze.
	→ The water tank is not clicked into place properly.	▶ Click the water tank into place.
	→ The compartment cover of the Fruit & Vegetable Safe is set to “low humidity”.	▶ The compartment cover of the Fruit & Vegetable Safe is set to “high humidity”.
The internal light does not come on.	→ The appliance is not switched on.	▶ Switch the appliance on.
	→ The door was open for longer than 15 minutes.	▶ Interior lighting switches off automatically after about 15 minutes when the door is open.
	→ The LED interior light is faulty or the lid is damaged.	▶ Contact Customer Service. (see 10.4 Customer Service)

10.4 Customer Service

First check whether you can rectify the fault yourself (see 10 Customer help) . If you cannot rectify the problem, contact Customer Service.

You can find the address at home.liebherr.com/service.

WARNING
Unprofessional repair!
Injuries.
- ▶ Have any repairs and action - not expressly specified - on the appliance and mains cable carried out by service personnel only. (see 9 Maintenance)
- ▶ A damaged mains cable may only be replaced by the manufacturer, the manufacturer’s Customer Service or a similarly qualified person.
- ▶ In the case of appliances with an IEC connector, the change may be made by the customer.

10.4.1 Contacting Customer Service

Make sure that the following appliance information is available:

- ❑ Appliance name (model and index)
- ❑ Service no. (Service)
- ❑ Serial no. (S no.)

▶ Call up the appliance information via the display. (see Device information)

-or-

▶ Refer to the type plate for appliance information. (see 10.5 Model plate)

▶ Note down the appliance information.
▶ Notify customer service: Report errors and the appliance information.
▷ This will help us to provide you with a faster, more accurate service.
▶ Follow further instructions from Customer Service.

10.5 Model plate

The model plate is behind the drawers on the inside of the appliance.

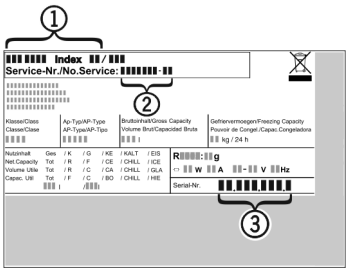

Fig. 153

(1) Appliance description **(3)** Serial no.
(2) Service no.

▶ Note the data on the model plate.

11 Shutting down

▶ Empty the appliance.
▶ Deactivate HydroBreeze. (see Deactivating HydroBreeze)
▶ Switch off appliance. (see Switching the appliance off and on)
▶ Pull the mains plug out of the socket.
▶ Remove the IEC socket if required: Pull the IEC socket out of the appliance plug and move it to the left and right at the same time.
▶ Clean appliance. (see 9.8 Cleaning the appliance)
▶ Leave the door open, so that no unpleasant odours arise.

12 Disposal

12.1 Preparing appliance for disposal

Li-Ion

Liebherr uses batteries in some of its appliances. In the EU, for environmental reasons, legislation obliges the end user to remove these batteries before disposing of old appliances. If your appliance contains batteries, a corresponding notice is attached.

Lamps — If you can remove the lamps yourself without destroying them, also remove these before disposal.

▶ Take the appliance out of operation.

▶ If possible: remove lamps without destroying them.

12.2 Disposing of the appliance in an environmentally friendly manner

The appliance still contains valuable materials and must be disposed of separately from unsorted municipal waste.

Dispose of batteries separately from the old appliance. To do this, you can return the batteries free of charge to retailers as well as recycling centres and collection centres for recyclable materials.

Lamps

Dispose of removed lamps via the respective collection systems.

WARNING
Leaking coolant and oil!
Fire. The coolant contained in the appliance is eco-friendly, but also flammable. The oil contained in the appliance is flammable. Escaping coolant and oil can ignite if the concentration is high enough and in contact with an external heat source.
▶ Do not damage the pipelines of the coolant circuit and the compressor.

▶ Observe the notes on transporting the appliance.
▶ Transport the appliance without damaging it.
▶ Dispose of batteries, lamps and the appliance according to the above specifications.

home.liebherr.com/fridge-manuals

EN integrated fridge with BioFresh

Issue date: 20260504

Part number index: 7088407-00

Liebherr-Hausgeräte GmbH
Memminger Straße 77-79
88416 Ochsenhausen
Deutschland