Installation Guide

Quality, Design and Innovation

home.liebherr.com/fridge-manuals

LIEBHERR

Contents

1 General safety instructions **2**

2 Installation conditions **3**
2.1 Location 3
2.2 Installing multiple appliances 3
2.3 Mains connection 3

3 Appliance dimensions **4**

4 Recess dimensions **5**

5 Ventilation requirements **5**

6 Transporting appliance **6**

7 Unpacking the appliance **6**

8 Setting up the appliance **6**
8.1 After installation 6

9 Disposing of packaging **6**

10 What the symbols mean **6**

11 ** freezer compartment door*** **7**
11.1 Moving the door hinge 7

12 Changing the door direction **7**

13 Installing the appliance in the recess **9**

14 Connecting the appliance to the power supply **15**

The manufacturer is continually working on the further development of all types and models. Please be aware that we reserve the right to make changes to the shape, equipment and technology.

Symbol	Explanation
	Read instructions Please read the information in these instructions carefully to understand all of the benefits of your new appliance.
	Additional information on the Internet The digital manual with additional information and in other languages can be found via the QR code on the front of the manual or by entering the service number at **home.liebherr.com/fridge-manuals**. The service number can be found on the serial tag: 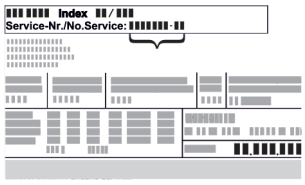 *Fig.* Example illustration
	Check appliance Check all parts for transport damage. If you have any complaints, please contact your agent or customer service.
	Differences These instructions apply to a range of models, so differences are possible. Sections that apply to certain models only are marked with an asterisk (*).

Symbol	Explanation
	Instructions and results Instructions are marked with a ▶. Results are marked with a ▷.
	Videos Videos about the appliances are available on the YouTube channels of Liebherr-Hausgeräte.

Open source licences:

The appliance contains software components that use open source licences. Information on the open source licences used can be found here: **home.liebherr.com/open-source-licences**

1 General safety instructions

- Please keep this assembly manual in a safe place so you can refer back to it at any time.
- If you pass the appliance on, please hand this assembly manual to the next user.
- Read this assembly manual carefully before installation and use to ensure safe and correct use of the appliance. Follow the instructions, safety instructions and warning messages included at all times. They are important for ensuring you can operate and install the appliance safely and without any problems.
- First read the general safety instructions in the "General safety instructions" section of the **operating instructions**, which accompany these installation instructions, and follow them. If you cannot find the **operating instructions**, you can download the **operating instructions** from the internet by entering the service number at **home.liebherr.com/fridge-manuals**. The service number can be found on the serial tag:

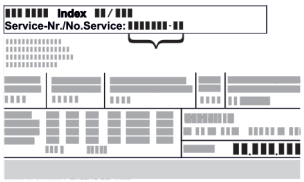

- **Observe the warning messages and other detailed information in the other sections when installing the appliance:**

	DANGER	identifies a situation involving direct danger which, if not obviated, may result in death or severe bodily injury.
	WARNING	identifies a dangerous situation which, if not obviated, may result in death or severe bodily injury.
	CAUTION	identifies a dangerous situation which, if not obviated, may result in minor or medium bodily injury.
	NOTICE	identifies a dangerous situation which, if not obviated, may result in damage to property.
	Note	identifies useful instructions and tips.

* Depending on model and options

2 Installation conditions

WARNING
Fire hazard due to dampness!
If live parts or the mains lead become damp this may cause short circuits.
▶ The appliance is designed for use in enclosed areas. Do not operate the appliance outdoors or in areas where it is exposed to splash water or damp conditions.

Intended use
- Install and use the appliance in indoor spaces only.
- Use the appliance only once installed.

2.1 Location

WARNING
Leaking coolant and oil!
Fire. The coolant contained in the appliance is eco-friendly, but also flammable. The oil contained in the appliance is flammable. Escaping coolant and oil can ignite if the concentration is high enough and in contact with an external heat source.
▶ Do not damage the pipelines of the coolant circuit and the compressor.

- If the appliance is installed in a very humid environment, condensation can build up on the outside of the unit. Always ensure good airlow and ventilation in the installation location.
- The more refrigerant there is in the appliance, the larger the space that it is installed in must be. If the space is too small, any leak may create a flammable mixture of gas and air. For every 8 g of refrigerant, the installation space must be at least 1 m^3 . Information regarding the coolant can be found on the serial tag inside the appliance.

2.1.1 Supporting floor

- The floor of the installation site must be horizontal and even.
- If you are installing the unit in a cabinet standing on an uneven floor: level the cabinet.

2.1.2 Positioning

- Do not install the appliance in direct sunlight or near radiators or similar sources of heat.
- You can install the appliance directly next to an oven.
- If the appliance is installed directly next to an oven, the energy consumption may increase slightly. This is dependent on the service life and usage intensity of the oven.
- Only fit the appliance into solid kitchen units.

2.2 Installing multiple appliances

The appliances have been developed for different installation methods. If you wish to install several appliances next to each other or on top of each other, ensure that the following requirements are met:

❑ Only install appliances next to or on top of each other if they have been developed for this.
❑ Observe notices and the following table.

NOTICE
Risk of damage due to condensate!
▶ Do not place the appliance directly next to another cooling/refrigeration unit.

NOTICE
Risk of damage due to condensation!
▶ Do not place the appliance directly on top of another cooling/refrigeration unit.

Model	Installation method
All models	Standalone
Models with a model designation starting with **S...**.	Side-by-Side (SBS)
Models up to a maximum niche height of 880 mm and with a heated ceiling can be installed “on top of each other”. Top appliance: up to a maximum niche height of 140 mm	On top of each other

Models and their installation method

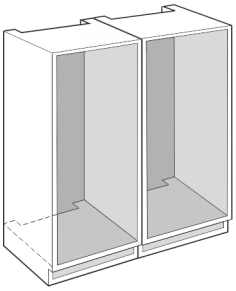

Fig. 1

Install each appliance into a separate unit niche.

2.3 Mains connection

WARNING
Danger of fire due to incorrect positioning!
If the mains cable or plug touches the back of the appliance, the vibration can damage the mains cable or the plug resulting in a short circuit.
▶ Make sure the mains cable is not trapped under the appliance when you position the appliance.
▶ Stand the appliance so that it is not touched by connectors or main cables.
▶ Do not connect any appliances to sockets in the area of the back of the appliance.
▶ Do **not** place and operate multi-sockets/power distributors and other electronic devices (such as halogen transformers) at the back of the appliances.

3 Appliance dimensions

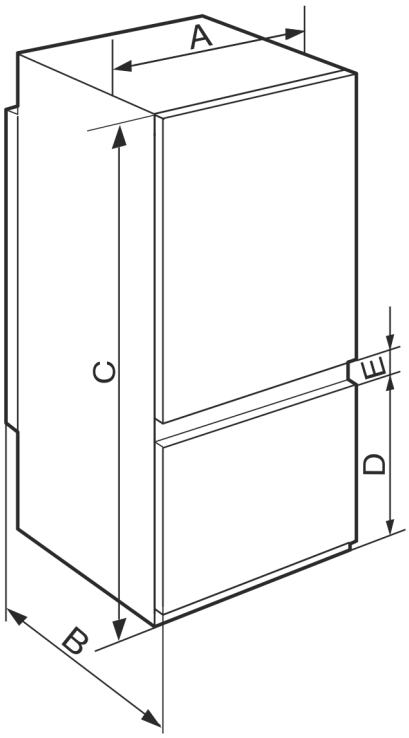

Fig. 2

IC(B)(N)S.. 51.2 / IKGS 51Vd02	
A (mm)	541
B (mm)	545
C (mm)	1770
D (mm)	523
E (mm)	67

Niche height 1780 - combinations with 2 freezer compartments

IC(B)(N)S.. 51.3 / IKGS 51Ve03 / IKGBNS 51Vd23 / IKGNS 51Vd03	
A (mm)	541
B (mm)	545
C (mm)	1770
D (mm)	669
E (mm)	67

Niche height 1780 - combinations with 3 freezer compartments

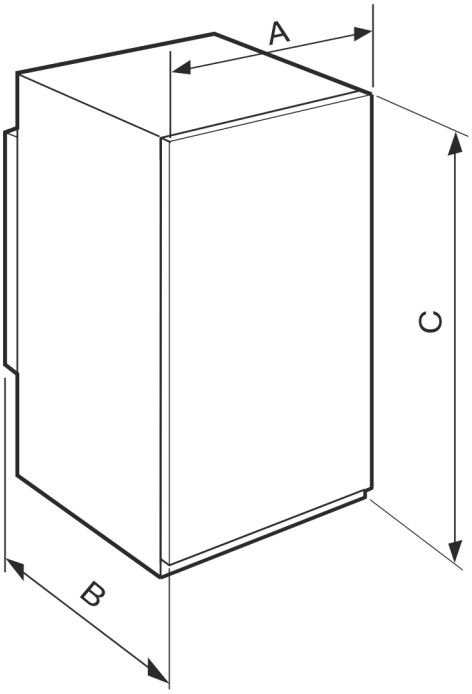

Fig. 3

IRS.. 39.. / IFS.. 39..	
A (mm)	541
B (mm)	545
C (mm)	872

Niche height 88

IR(B)S.. 41.. / IKS 41Ve00 / IKS 41Ve01	
A (mm)	541
B (mm)	545
C (mm)	1213

Niche height 122

IR(B)S.. 51.. / SIFNS.. 51..	
A (mm)	541
B (mm)	545
C (mm)	1770

Niche height 1780

*** Depending on model and options**

4 Recess dimensions

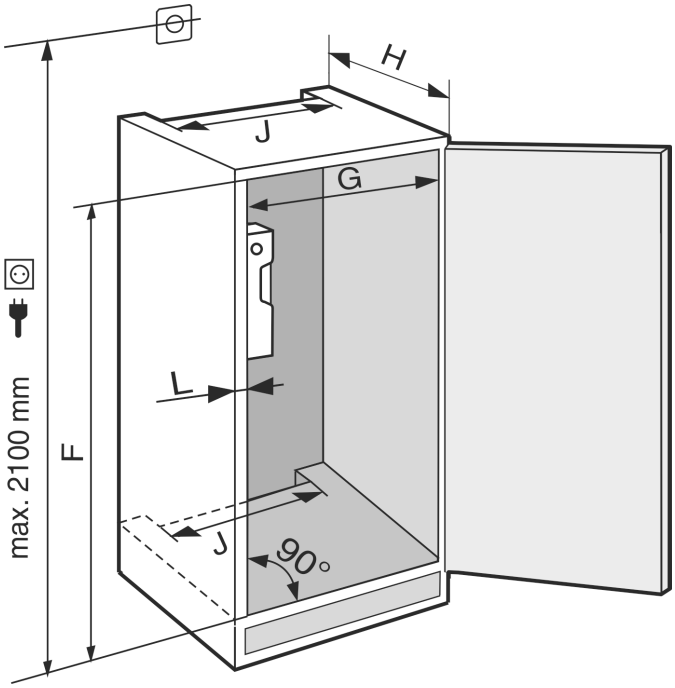

Fig. 4

IRS.. 39.. / IFS.. 39..	
F (mm)	874 to 890
G (mm)	560 to 570
H (mm)	min. 550, recommended 560
J (mm)	min. 500
L (mm)	max. 19

IR(B)S.. 41.. / IKS 41Ve00 / IKS 41Ve01	
F (mm)	1216 to 1236
G (mm)	560 to 570
H (mm)	min. 550, recommended 560
J (mm)	min. 500
L (mm)	max. 19

IR(B)S.. 51.. / SIFNS.. 51..	
F (mm)	1772 to 1788
G (mm)	560 to 570
H (mm)	min. 550, recommended 560
J (mm)	min. 500
L (mm)	max. 19

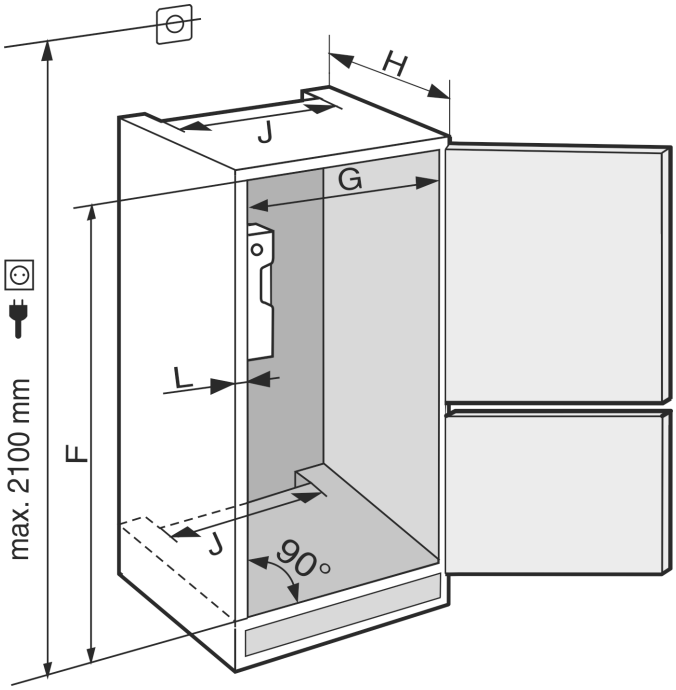

Fig. 5

IC(N)S.. 51.. / ICB(N)S.. 51.. / IKGNS 51Vd03 / IKGS 51Vd02 / IKGS 51Ve03 / IKGBNS 51Vd23	
F (mm)	1772 to 1788
G (mm)	560 to 570
H (mm)	min. 550, recommended 560
J (mm)	min. 500
L (mm)	max. 19

The specified energy consumption was determined with a kitchen unit depth of 560 mm. The appliance will work properly at a kitchen unit depth of 550 mm, but with a slightly higher energy consumption.

- ▶ Check the wall thickness of adjacent cabinets: They must have a minimum of 16 mm .
- ▶ Only fit the appliance into stable, solid kitchen units. Secure the unit against tipping.
- ▶ Align the cabinets with a spirit level and a try square. If necessary, level them by putting something underneath them.
- ▶ Make sure floor and the side panels of the cabinet are at right angles to each other.

5 Ventilation requirements

NOTICE
Covered vents!
Damage. Appliance can overheat, which can reduce the service life of various parts of the appliance and lead to operational impairments.

- ▶ Always make sure there is good ventilation.
- ▶ Always keep vents or ventilation grids in the appliance housing and in the kitchen furniture (fully integrated appliance) unobstructed.
- ▶ Always keep the fan air vents unobstructed.

Always follow the required ventilation gaps:

- The depth of the ventilation shaft at the back of the cabinet must be at least 38 mm.

- At least 200 cm^2 is required for the ventilation gap cross sections in the plinth and the housing cabinet.
- As a rule, the larger the ventilation cross-section, the more efficiently the appliance will run.

Sufficient ventilation is required for the operation of the appliance. The ventilation grids provided ensure an effective ventilation cross-section on the appliance of 200 cm^2. If you replace the ventilation grids with a cover plate the ventilation cross-section must be as least as large as the ventilation grid provided by the manufacturer.

6 Transporting appliance

Note when transporting the appliance:

▶ Transport the appliance upright.
▶ Use two people to transport the appliance.

During first use:

▶ Transport the appliance packaged.

When transporting appliances after initial commissioning (e. g. moving or cleaning):

▶ Empty the appliance.
▶ Secure the door against unintentional opening.

7 Unpacking the appliance

Before you connect the appliance, report any damage immediately to the delivery company.

▶ Check the appliance and the packaging for damage during transport. Contact the supplier immediately if you suspect any level of damage.
▶ Remove all materials from the back or the side walls of the appliance that may prevent proper installation or ventilation.
▶ Remove all protective films from the appliance. Do not use sharp or pointed objects for this.

8 Setting up the appliance

CAUTION

Risk of injury due to heavy appliance!

▶ Have two people transport the appliance to its installation site.

WARNING

Danger of injury and damage due to the appliance being unstable!
The appliance can topple over.

▶ Secure the appliance as described in the instructions.

WARNING

Fire hazard and danger of damage!

▶ Do not place appliances emitting heat e.g. microwaves, toasters etc. on the appliance!

If possible, have the appliance installed in the kitchen unit by a professional.

Do not install the appliance on your own.

8.1 After installation

▶ Remove all transport safety components.
▶ Clean the appliance (see User Guide, Cleaning the appliance).

9 Disposing of packaging

WARNING

Danger of suffocation due to packing material and plastic film!

▶ Do not allow children to play with packing material.

The packaging is made of recyclable materials:

- corrugated board/cardboard
- expanded polystyrene parts
- polythene bags and sheets
- polypropylene straps
- nailed wooden frame with polyethylene panel*

▶ Take the packaging material to an official collecting point.

10 What the symbols mean

	Risk of injury here! Follow the safety notes!
	These instructions apply to a range of models. Follow this step only if it applies to your appliance.
	To install, please follow the detailed description in the Guide.
	This section applies either to a single-door appliance or a double-door appliance.
	Choose one of the options: Appliance with right-hinged door or appliance with left-hinged door.
	Installation step required if your model has IceMaker and/or InfinitySpring.
	Just loosen the screws or tighten them slightly.
	Tighten the screws.
	Check to see if the next step applies for your model.
	Check the correct assembly/seat of the components used.

* Depending on model and options

	Measure the specified measurement and adjust if necessary.
	Tool for assembly: Metre rule
TORX® 20	Tool for assembly: Cordless screwdriver and attachments A lengthwise bit insert is recommended for good access to the screws.
	Tool for assembly: Spirit level
SW7 SW10	Tool for assembly: Size 7 and size 10 spanners
	Two people are required for this step.
	Carry out this step at the marked place on the appliance.
	Aids for assembly: String
	Aids for assembly: Square
	Aids for assembly: Screwdriver
	Aids for assembly: Scissors
	Aids for assembly: Non-permanent marker pen
	Accessory kit: Remove components
	Dispose of components that are no longer needed.

11 **** freezer compartment door*

It is very easy to reposition the hinge of the **** freezer compartment door if the main door hinge is swapped. If the main door of the appliance can be opened to more than 115° (1), you can open the freezer compartment without repositioning the hinge. If the opening angle (2) of the appliance door is less than this, the hinge must be repositioned.

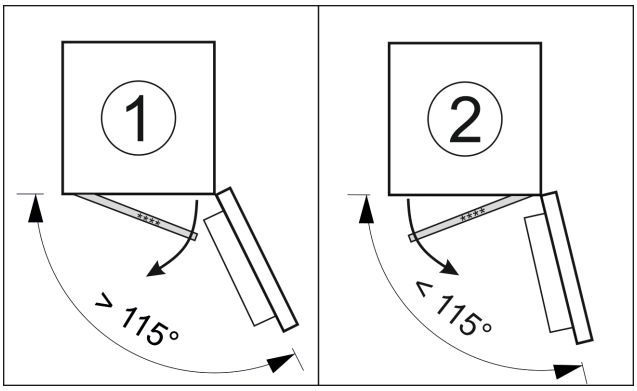

Fig. 6

11.1 Moving the door hinge

The slider for moving the door hinge is located on the back of the **** freezer compartment door at the bottom.

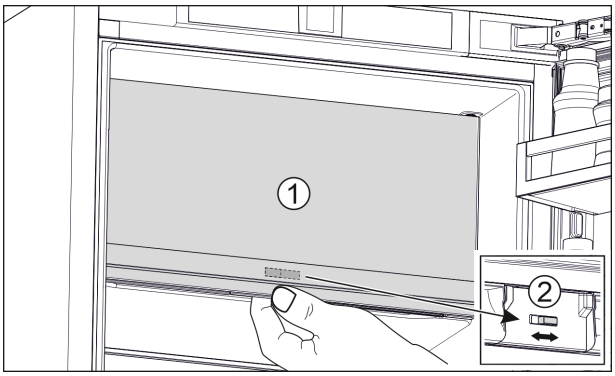

Fig. 7

▶ Close the **** freezer compartment door (1).
▶ Grab the **** freezer compartment door from below.
▶ Move the slider (2) either to the right or to the left.

12 Changing the door direction

Tool

Fig. 8

Changing the door direction

WARNING

Danger of injury if the door falls out!

If the fixing parts are not screwed in sufficiently the door may fall off. This may lead to serious injuries. In addition, the door may not close, thus impairing the cooling performance of the appliance.

▶ Screw the upper and lower bearing brackets firmly to 4 Nm.

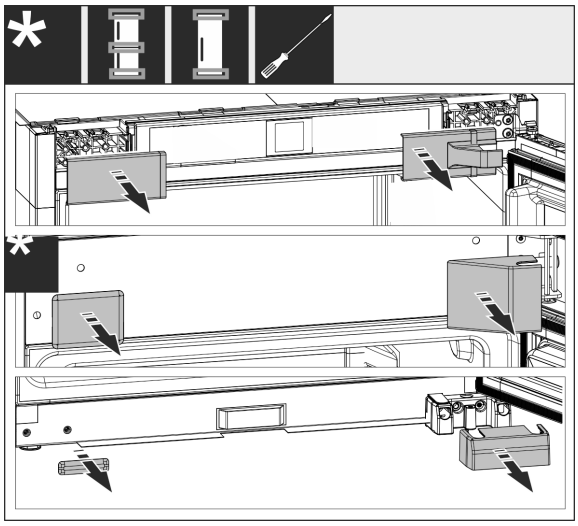

Fig. 9

▶ Remove any mounted covers, if necessary, use a slotted screwdriver to lift them off.

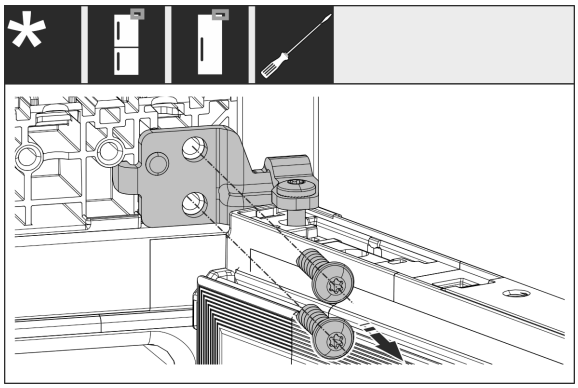

Fig. 10

▶ Loosen the screws on the bearing block. Secure the door against falling out.

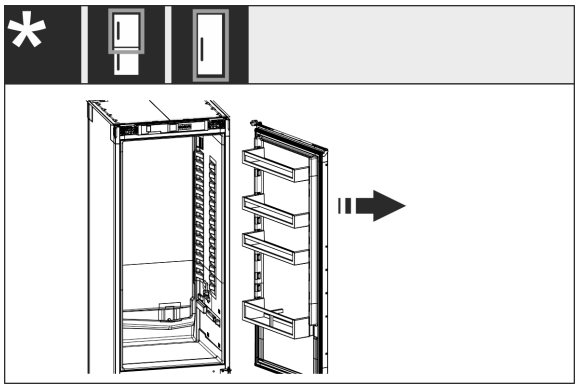

Fig. 11

▶ Remove the door together with the still screwed-on bearing bracket.

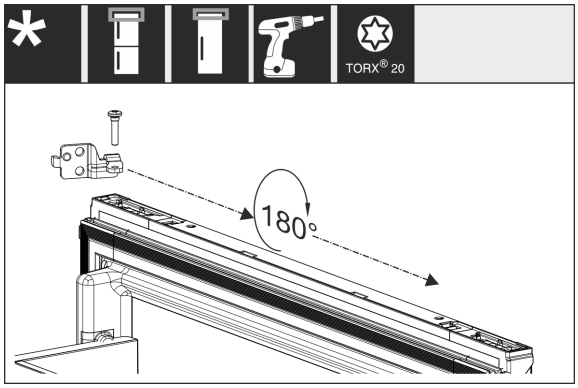

Fig. 12

▶ Turn and shift the bearing block by 180°.

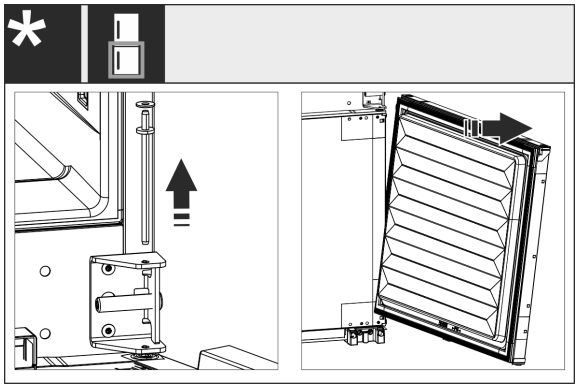

Fig. 13

▶ Remove the lower door: Pull out the middle bearing bolt with the disc. Secure the door against tipping out. Lift the door up.

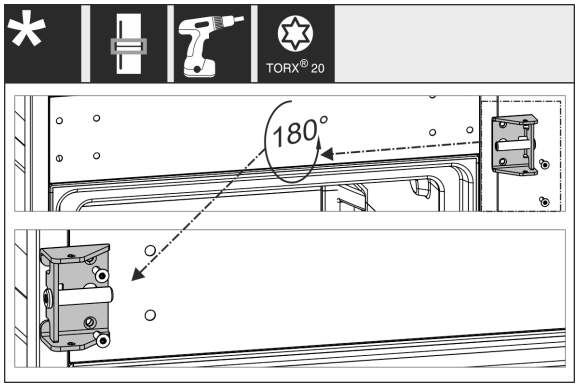

Fig. 14

▶ Shift the middle bearing block and screw it tightly.

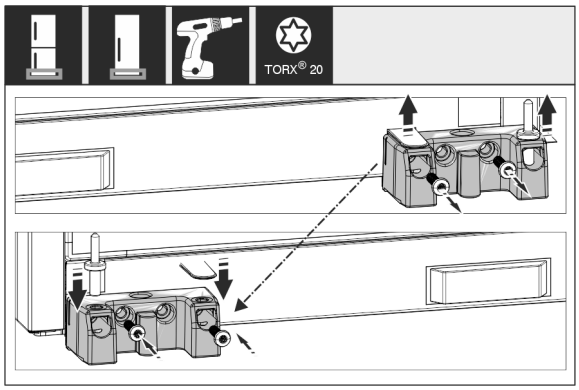

Fig. 15

▶ Shift the bottom bearing block and screw it tightly.

*** Depending on model and options**

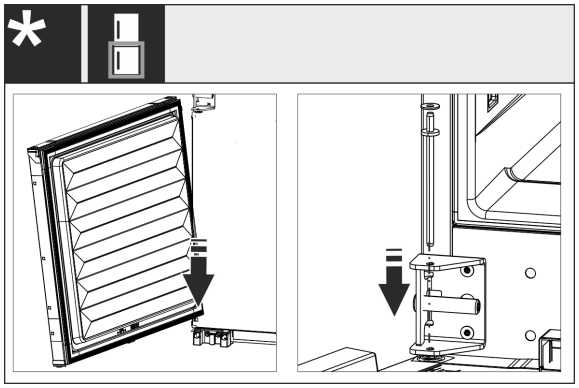

Fig. 16

▶ For combined units: Mount the lower door: Place on the hinge bolt at the bottom and rotate into place at the top. Insert the middle bearing bolt into the door from above through the middle bearing block.

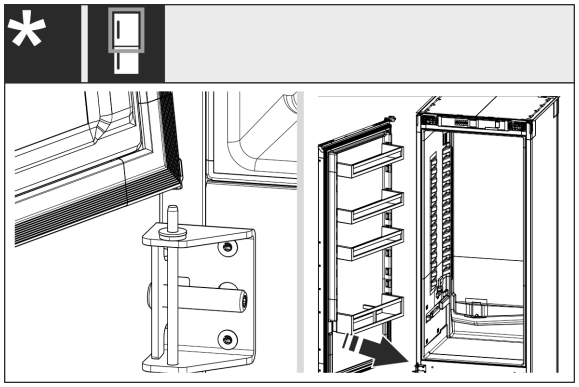

Fig. 17

▶ For combined units: Mounting the top door: Place at the bottom of the middle bearing bolt.

▶ For single-door appliances: Fitting the door: Place it on the bearing pin at the bottom.

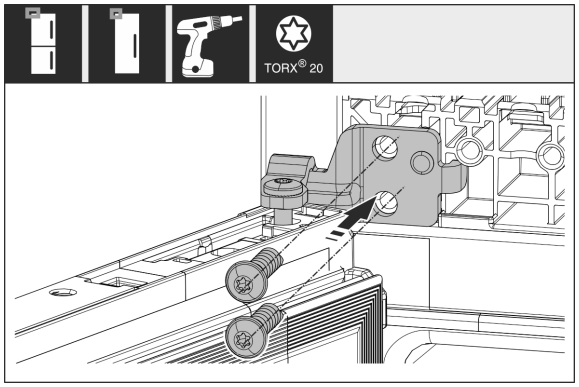

Fig. 18

▶ Screw the top bearing block to the housing.

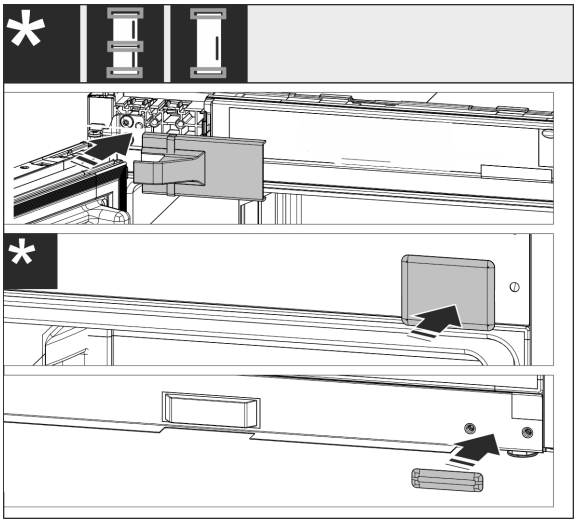

Fig. 19

▶ Refit the covers on the handle side. Reinstall the covers on the hinge side only once the appliance is installed in the cabinet.

▶ Check all screws and retighten if necessary.

13 Installing the appliance in the recess

Tools and materials

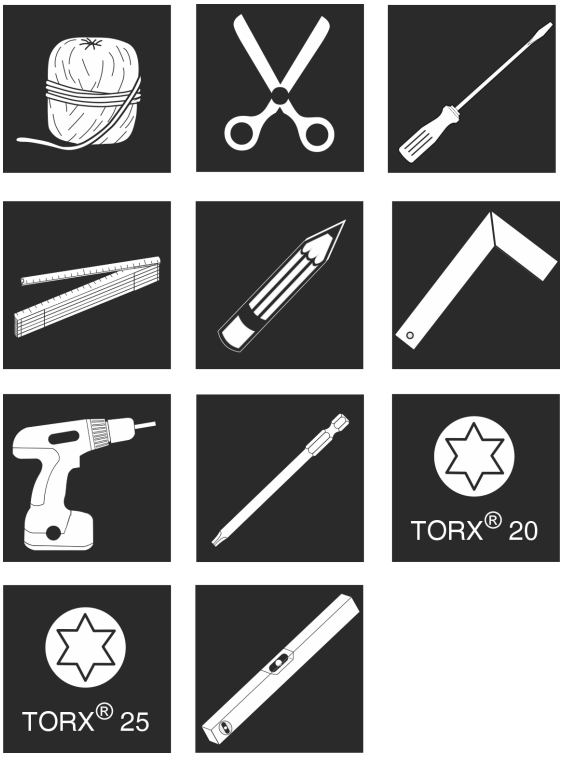

Fig. 20

Supplied assembly parts

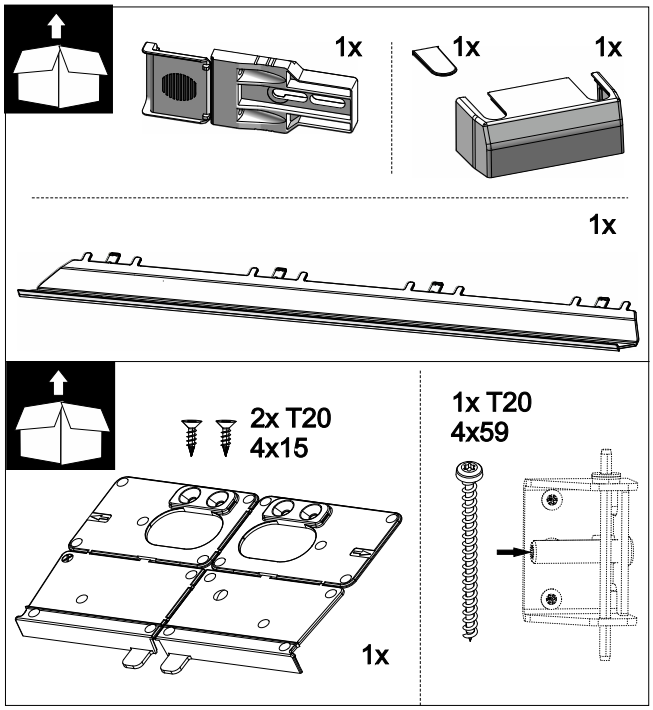

Fig. 21

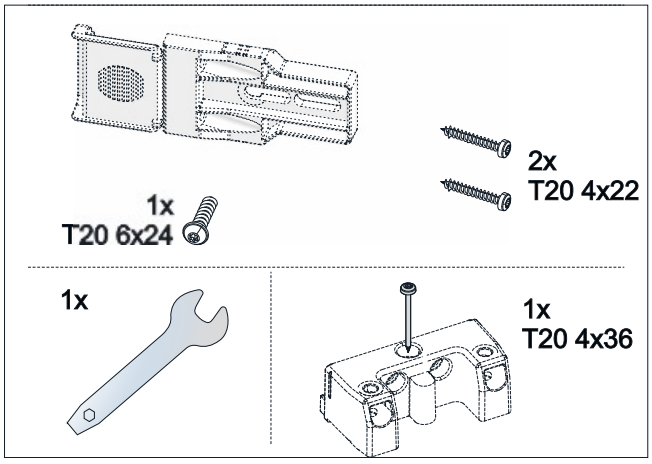

Fig. 22

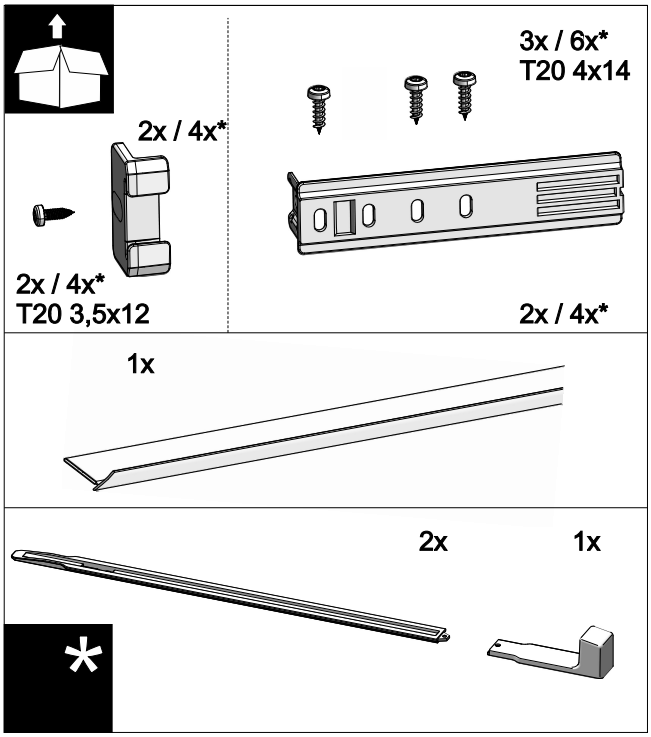

Fig. 23

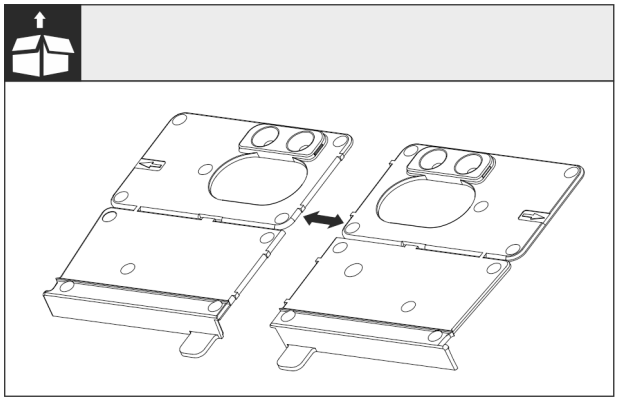

Fig. 24 Floor mounting bracket

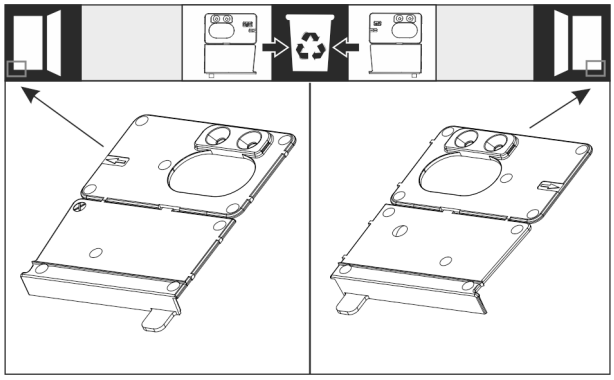

Fig. 25

▶ Separate the mounting bracket at the perforation. Dispose of either the right or left mounting bracket, depending on which way the door opens.

*** Depending on model and options**

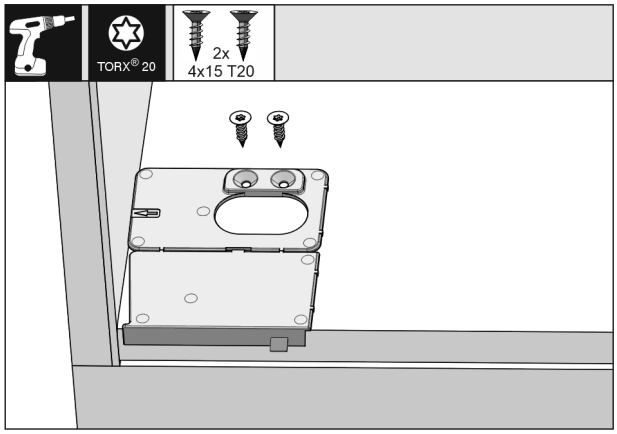

Fig. 26

NOTICE
Correct installation depth of the appliance
▶ Using the mounting bracket ensures the correct installation depth of the appliance.

▶ Screw the mounting bracket base on the right or left, flush to the side wall on the base of the cabinet recess, depending on which way the door opens. The mounting bracket is always mounted on the handle side.

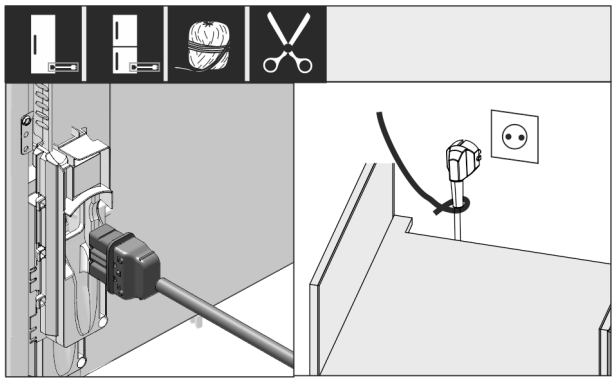

Fig. 27
▶ Remove the mains cable from the package.
▶ Plug the mains cable's IEC socket completely into the appliance plug on the back of the appliance. Ensure that the IEC socket is tight.
▶ Use a cord to lay the mains plug to a freely accessible socket.

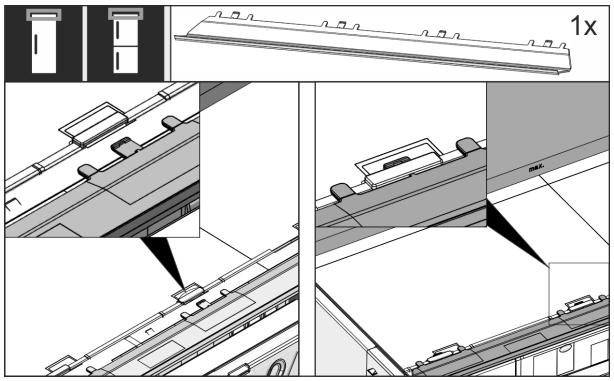

Fig. 28
▶ Insert the levelling panel. The panel can be moved to both sides.

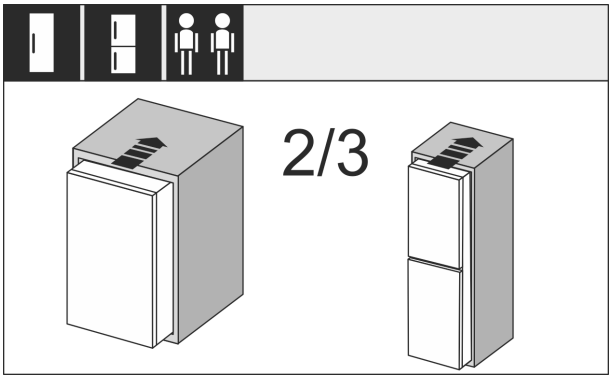

Fig. 29
▶ Insert the appliance 2/3 of the way into the recess.

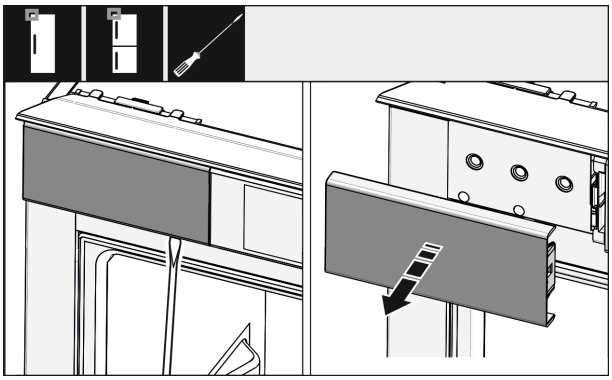

Fig. 30
▶ Use a screwdriver to loosen the cover at the top left and then remove it.
▶ If already mounted, remove the other covers.

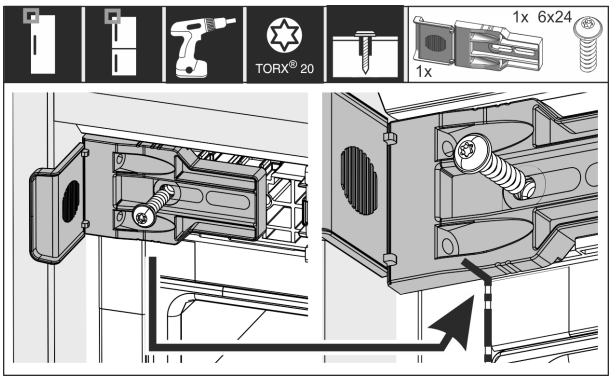

Fig. 31
▶ Tighten the mounting bracket. The bracket should no longer move. The marking of the mounting bracket is ideally located on the joint of the housing.

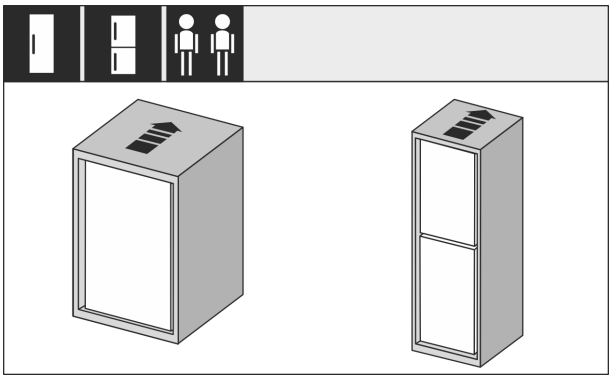

Fig. 32

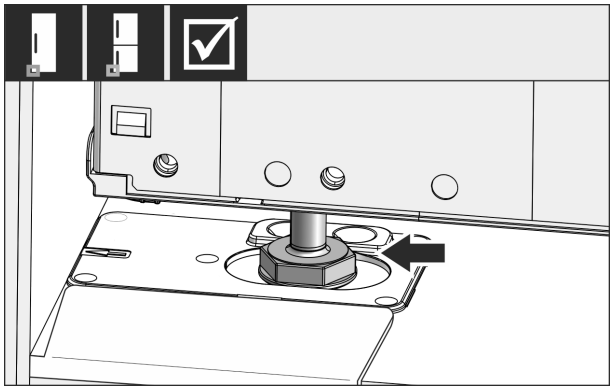

Fig. 33

WARNING

Risk of fire due to short circuit!

- ▶ When you push the appliance into the niche: do not kink, jam or damage the mains cable.
- ▶ The appliance must not be operated with a defective mains cable.

▶ Insert the appliance all the way into the unit recess. The adjustable foot must sit in the recess of the mounting bracket.

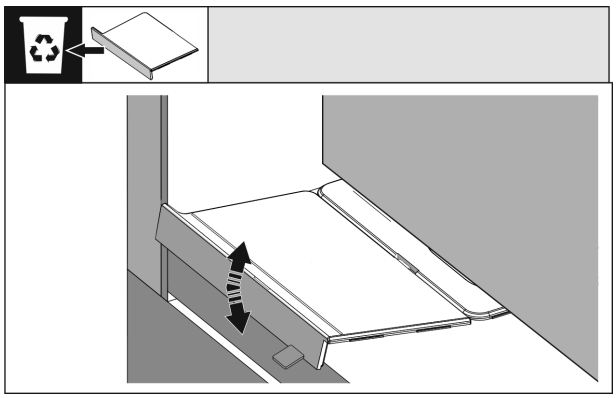

Fig. 34

▶ Removing the front stopper of the floor mounting bracket: Loosen the stopper by moving it and, if necessary, pull it off using pliers.

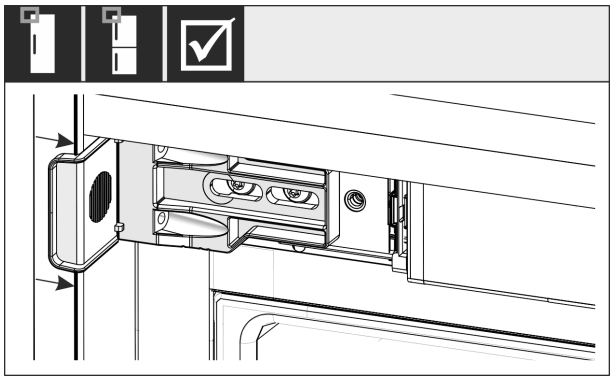

Fig. 35

▶ Check that the appliance is flush in the cabinet recess. The mounting bracket must be attached to the side wall of the cabinet recess.

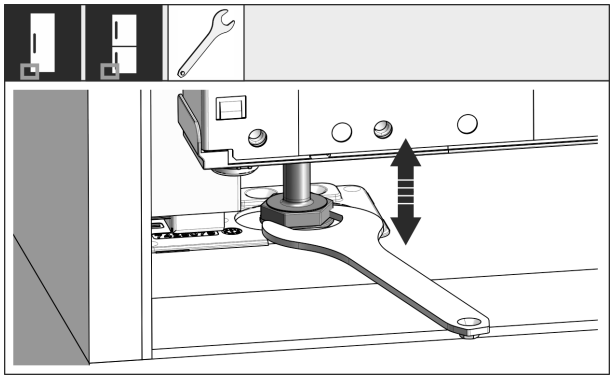

Fig. 36

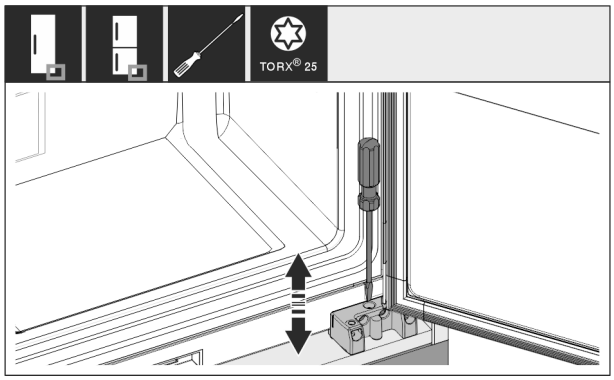

Fig. 37

▶ If necessary, use the adjustable feet to correct the tilt of the appliance.

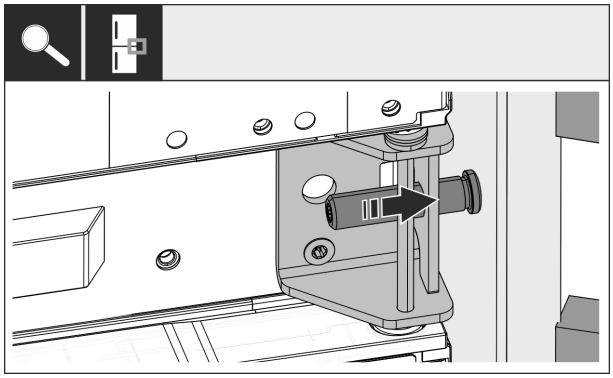

Fig. 38

▶ For combinations: Secure the appliance into the cabinet recess on the hinge side using the middle bearing block. Make sure that the cabinet wall is not damaged by the adjusting screw.

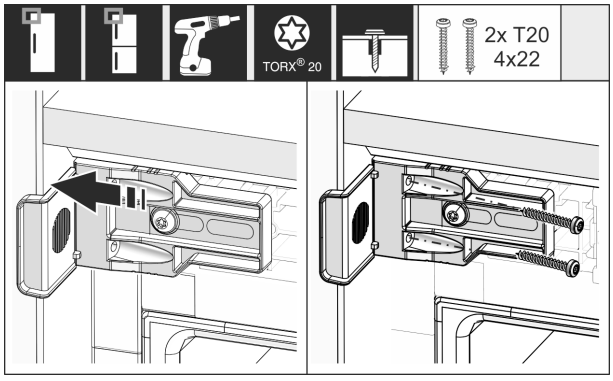

Fig. 39

▶ Tightly screw the bracket to the side wall of the cabinet recess.

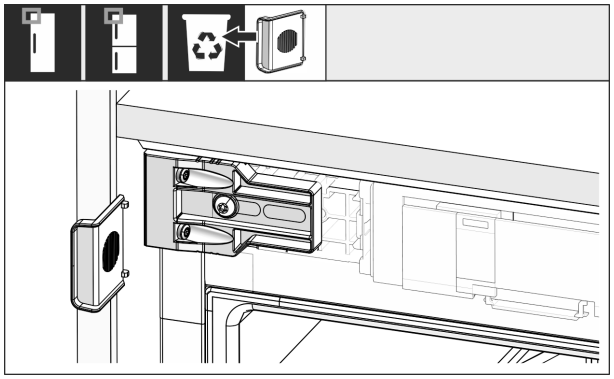

Fig. 40

▶ Remove the stop from the bracket on the handle side and dispose of it.

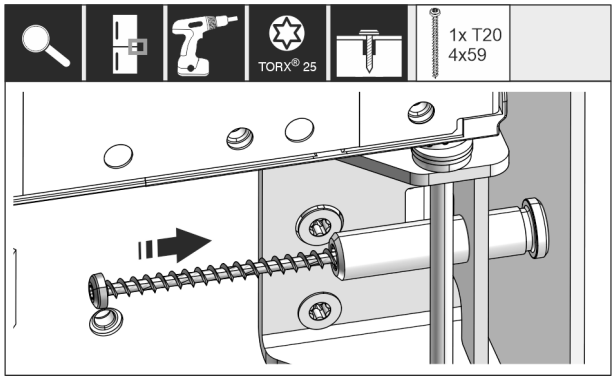

Fig. 41

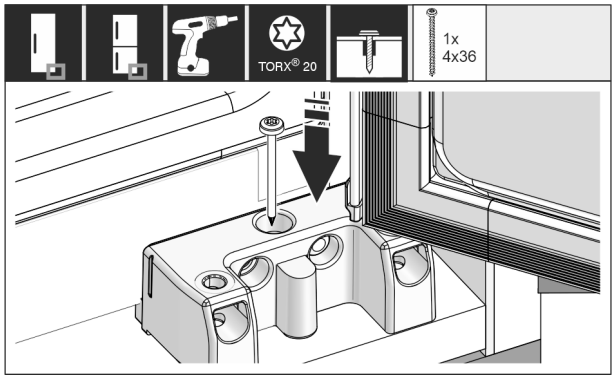

Fig. 42

▶ Screw the appliance into the recess on the hinge side using the middle and bottom bearing brackets.

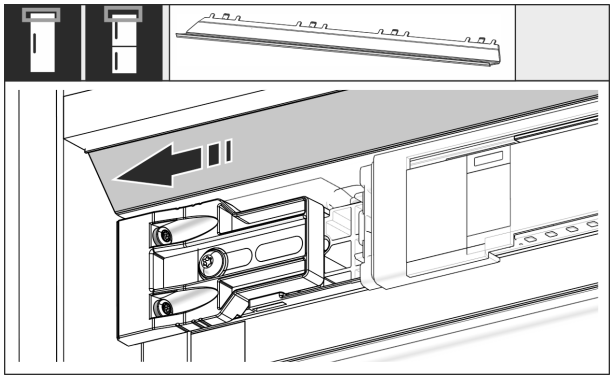

Fig. 43

▶ Slide the panel so that it sits flush on the side of the cabinet wall.

From a niche height of 1400 mm, install levelling rails:

Fig. 44

You must installed levelling rails under the appliance from a niche height of 1400 mm. The levelling rails **reduce the noise level**. Two levelling rails and an installation handle are enclosed as standard from a niche height of 1400 mm.

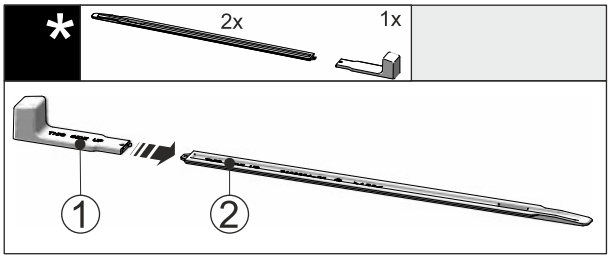

Fig. 45

▶ Attach the installation handle *Fig. 45 (1)* to the levelling rail *Fig. 45 (2)*.

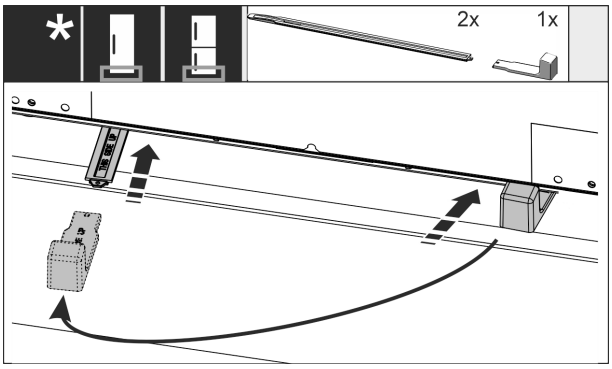

Fig. 46

▶ Push the levelling rail into the guide under the appliance base until it reaches the stop.

▶ Remove the installation handle and attach it to the second levelling rail.

▶ Proceed in the same way for the second levelling rail.

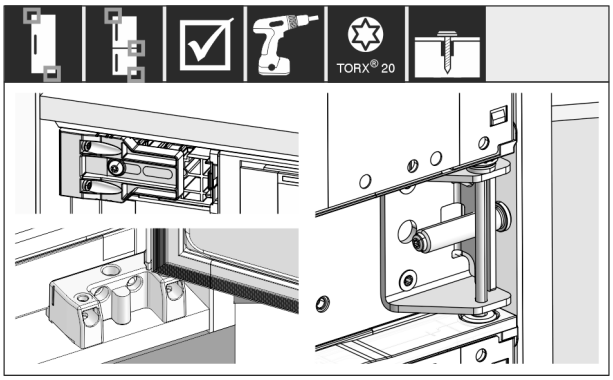

Fig. 47

▶ Check all screws and retighten them.

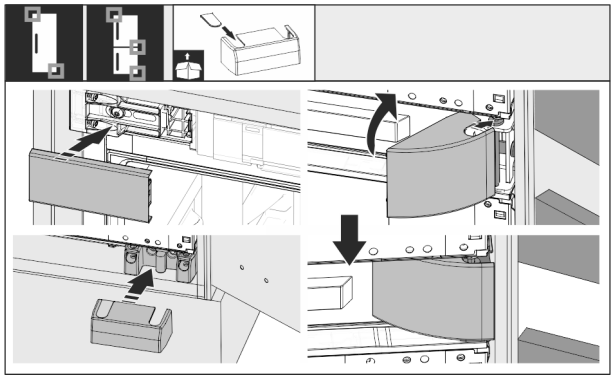

Fig. 48

▶ Put all the covers on.

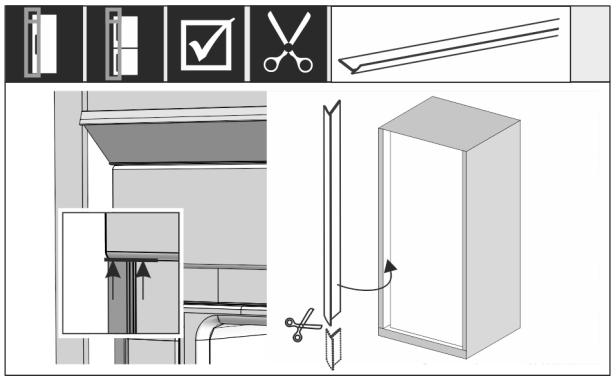

Fig. 49

▶ If necessary: Shorten the sealing strip as necessary with a sharp pair of scissors.

▶ Position the sealing strip below the top cover and press it in. The sealing strip is magnetic.

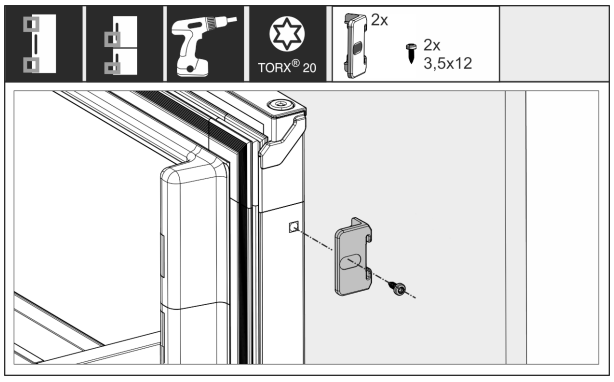

Fig. 50

Attaching custom panel to the appliance door:

▶ Open the door fully.

▶ Mount bracket onto the appliance door.

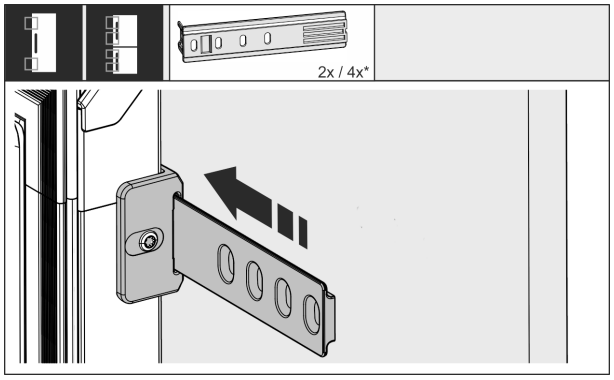

Fig. 51

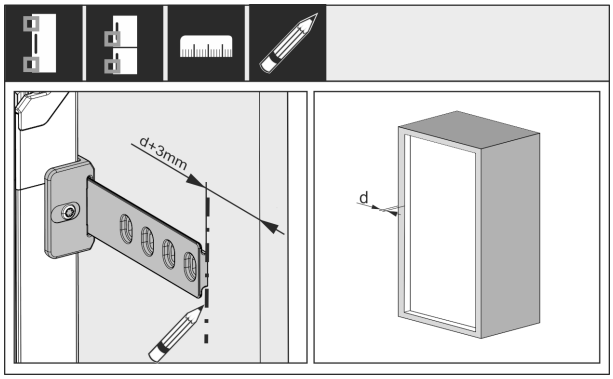

Fig. 52

The gap between the end of the rail and the outer edge of the custom panel is the thickness of the unit side wall + 3 mm.

▶ Mark using a non-waterproof pen.

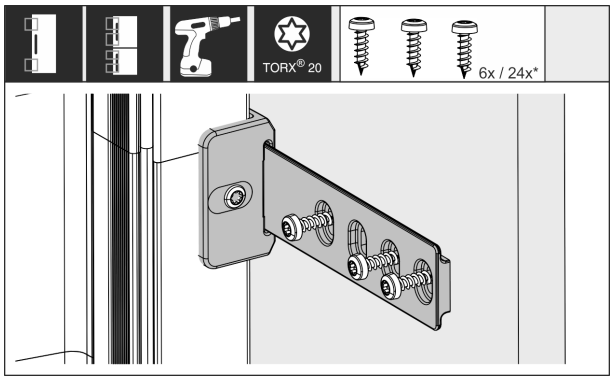

Fig. 53

▶ Push the rails into the bracket and screw to the cabinet door.

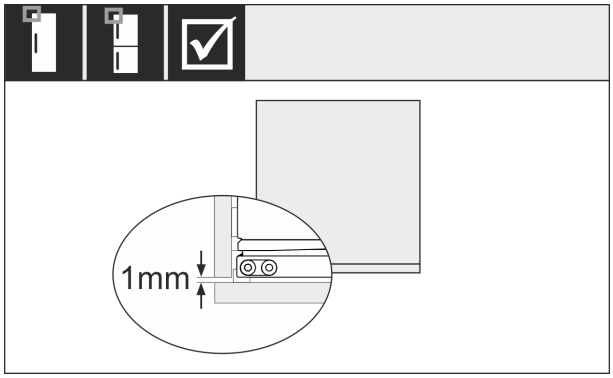

Fig. 54

▶ Check that the seal runs all the way around the appliance door.

▶ Make sure the custom panel does not open onto the side wall of the unit recess. Liebherr recommends a minimum gap of 1 mm.

*** Depending on model and options**

14 Connecting the appliance to the power supply

WARNING
Danger of electric shock and injury due to damaged appliance or damaged mains cable!
Danger of cuts and fatal injuries. If the appliance or the mains cable is damaged during transport, you may be electrocuted. You could also cut yourself on damaged parts of the appliance housing.
▶ Check the appliance and the mains cable for damage after transport.
▶ Never put the appliance into operation if the appliance or the mains cable are damaged.
▶ Contact Customer Service.

You can connect your appliance to the mains using the power cable supplied separately. The mains power cable has an appliance coupler at one end and a mains plug at the other end.

Make sure that the following requirements are fulfilled:

- The appliance and power cable are undamaged.
- The appliance is installed in accordance with the regulations. (see 13 Installing the appliance in the recess)
- Requirements for the electrical connection are met. (see 2 Installation conditions)
- Dimensions for connection in accordance with regulations are known and observed.
- Mains voltage and frequency correspond to the specifications on the type plate.
- The socket is earthed according to the regulations and fused.
- The fuse tripping current is between 10 A and 16 A.
- The socket is easily accessible and is not behind the appliance. (see 4 Recess dimensions)

NOTICE
Danger of damage to incorrect operation!
Damage to the electrical components of the appliance.
▶ Only use the supplied mains cable.

WARNING
Danger of fire due to incorrect connection!
Burns.
Damage to the appliance.
▶ Do not use an extension cable.
▶ Do not use distributor blocks.

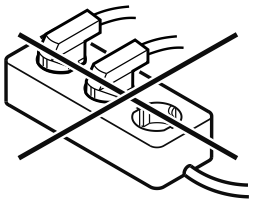

NOTICE
Danger of damage to incorrect connection!
Damage to the appliance.
▶ Do not connect the appliance to a stand-alone inverter, e.g. solar power systems and petrol generators.

▶ Connect the mains cable plug to the power supply. Ensure that the plug is tightly in the socket.
▷ The Liebherr logo appears in the display.
▷ The display switches to the standby symbol.
▷ If no action occurs within 60 seconds: The standby symbol fades or disappears.
▷ The appliance is connected. For information regarding first use, see the following section or the operating instructions.

home.liebherr.com/fridge-manuals

EN built-in fridge and freezers, sliding door

Issue date: 20250718

Part number index: 7088417-00

Liebherr-Hausgeräte GmbH
Memminger Straße 77-79
88416 Ochsenhausen
Deutschland

Installation Guide

Quality, Design and Innovation

home.liebherr.com/fridge-manuals

LIEBHERR

Contents

1 General safety instructions **2**

2 Installation conditions **3**
2.1 Location 3
2.2 Installing multiple appliances 3
2.3 Mains connection 3

3 Appliance dimensions **4**

4 Recess dimensions **5**

5 Ventilation requirements **5**

6 Transporting appliance **6**

7 Unpacking the appliance **6**

8 Setting up the appliance **6**
8.1 After installation 6

9 Disposing of packaging **6**

10 What the symbols mean **6**

11 ** freezer compartment door*** **7**
11.1 Moving the door hinge 7

12 Changing the door direction **7**

13 Installing the appliance in the recess **9**

14 Connecting the appliance to the power supply **15**

The manufacturer is continually working on the further development of all types and models. Please be aware that we reserve the right to make changes to the shape, equipment and technology.

Symbol	Explanation
	Read instructions Please read the information in these instructions carefully to understand all of the benefits of your new appliance.
	Additional information on the Internet The digital manual with additional information and in other languages can be found via the QR code on the front of the manual or by entering the service number at **home.liebherr.com/fridge-manuals**. The service number can be found on the serial tag: 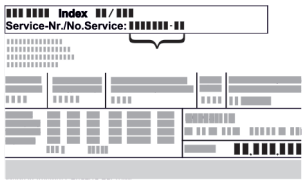 *Fig.* Example illustration
	Check appliance Check all parts for transport damage. If you have any complaints, please contact your agent or customer service.
	Differences These instructions apply to a range of models, so differences are possible. Sections that apply to certain models only are marked with an asterisk (*).

Symbol	Explanation
	Instructions and results Instructions are marked with a ▶. Results are marked with a ▷.
	Videos Videos about the appliances are available on the YouTube channels of Liebherr-Hausgeräte.

Open source licences:

The appliance contains software components that use open source licences. Information on the open source licences used can be found here: **home.liebherr.com/open-source-licences**

1 General safety instructions

- Please keep this assembly manual in a safe place so you can refer back to it at any time.
- If you pass the appliance on, please hand this assembly manual to the next user.
- Read this assembly manual carefully before installation and use to ensure safe and correct use of the appliance. Follow the instructions, safety instructions and warning messages included at all times. They are important for ensuring you can operate and install the appliance safely and without any problems.
- First read the general safety instructions in the "General safety instructions" section of the **operating instructions**, which accompany these installation instructions, and follow them. If you cannot find the **operating instructions**, you can download the **operating instructions** from the internet by entering the service number at **home.liebherr.com/fridge-manuals**. The service number can be found on the serial tag:

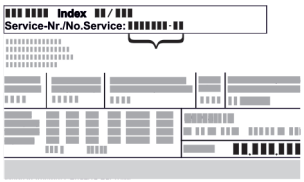

- **Observe the warning messages and other detailed information in the other sections when installing the appliance:**

	DANGER	identifies a situation involving direct danger which, if not obviated, may result in death or severe bodily injury.
	WARNING	identifies a dangerous situation which, if not obviated, may result in death or severe bodily injury.
	CAUTION	identifies a dangerous situation which, if not obviated, may result in minor or medium bodily injury.
	NOTICE	identifies a dangerous situation which, if not obviated, may result in damage to property.
	Note	identifies useful instructions and tips.

* Depending on model and options

2 Installation conditions

WARNING
Fire hazard due to dampness!
If live parts or the mains lead become damp this may cause short circuits.
▶ The appliance is designed for use in enclosed areas. Do not operate the appliance outdoors or in areas where it is exposed to splash water or damp conditions.

Intended use
- Install and use the appliance in indoor spaces only.
- Use the appliance only once installed.

2.1 Location

WARNING
Leaking coolant and oil!
Fire. The coolant contained in the appliance is eco-friendly, but also flammable. The oil contained in the appliance is flammable. Escaping coolant and oil can ignite if the concentration is high enough and in contact with an external heat source.
▶ Do not damage the pipelines of the coolant circuit and the compressor.

- If the appliance is installed in a very humid environment, condensation can build up on the outside of the unit. Always ensure good airlow and ventilation in the installation location.
- The more refrigerant there is in the appliance, the larger the space that it is installed in must be. If the space is too small, any leak may create a flammable mixture of gas and air. For every 8 g of refrigerant, the installation space must be at least 1 m^3 . Information regarding the coolant can be found on the serial tag inside the appliance.

2.1.1 Supporting floor

- The floor of the installation site must be horizontal and even.
- If you are installing the unit in a cabinet standing on an uneven floor: level the cabinet.

2.1.2 Positioning

- Do not install the appliance in direct sunlight or near radiators or similar sources of heat.
- You can install the appliance directly next to an oven.
- If the appliance is installed directly next to an oven, the energy consumption may increase slightly. This is dependent on the service life and usage intensity of the oven.
- Only fit the appliance into solid kitchen units.

2.2 Installing multiple appliances

The appliances have been developed for different installation methods. If you wish to install several appliances next to each other or on top of each other, ensure that the following requirements are met:

❑ Only install appliances next to or on top of each other if they have been developed for this.
❑ Observe notices and the following table.

NOTICE
Risk of damage due to condensate!
▶ Do not place the appliance directly next to another cooling/refrigeration unit.

NOTICE
Risk of damage due to condensation!
▶ Do not place the appliance directly on top of another cooling/refrigeration unit.

Model	Installation method
All models	Standalone
Models with a model designation starting with **S...**.	Side-by-Side (SBS)
Models up to a maximum niche height of 880 mm and with a heated ceiling can be installed “on top of each other”. Top appliance: up to a maximum niche height of 140 mm	On top of each other

Models and their installation method

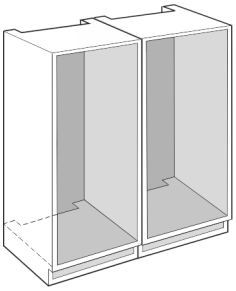

Fig. 1

Install each appliance into a separate unit niche.

2.3 Mains connection

WARNING
Danger of fire due to incorrect positioning!
If the mains cable or plug touches the back of the appliance, the vibration can damage the mains cable or the plug resulting in a short circuit.
▶ Make sure the mains cable is not trapped under the appliance when you position the appliance.
▶ Stand the appliance so that it is not touched by connectors or main cables.
▶ Do not connect any appliances to sockets in the area of the back of the appliance.
▶ Do **not** place and operate multi-sockets/power distributors and other electronic devices (such as halogen transformers) at the back of the appliances.

3 Appliance dimensions

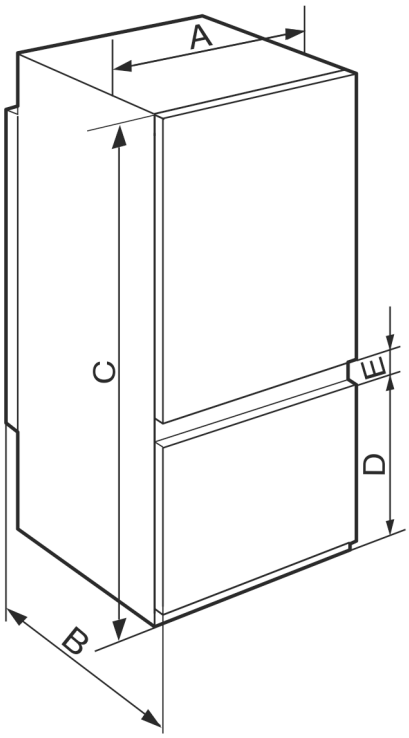

Fig. 2

IC(B)(N)S.. 51.2 / IKGS 51Vd02	
A (mm)	541
B (mm)	545
C (mm)	1770
D (mm)	523
E (mm)	67

Niche height 1780 - combinations with 2 freezer compartments

IC(B)(N)S.. 51.3 / IKGS 51Ve03 / IKGBNS 51Vd23 / IKGNS 51Vd03	
A (mm)	541
B (mm)	545
C (mm)	1770
D (mm)	669
E (mm)	67

Niche height 1780 - combinations with 3 freezer compartments

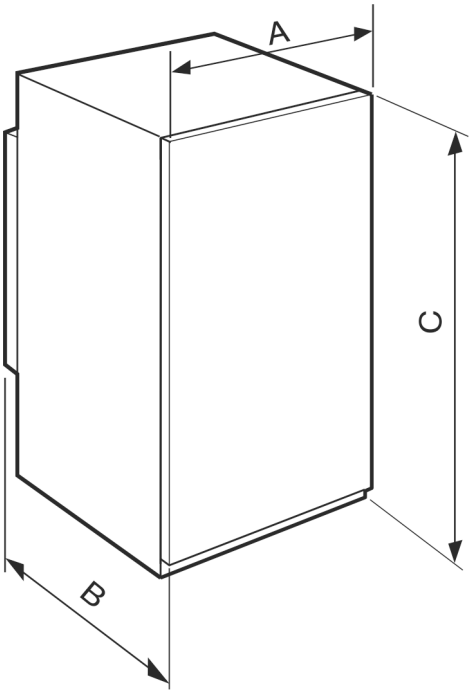

Fig. 3

IRS.. 39.. / IFS.. 39..	
A (mm)	541
B (mm)	545
C (mm)	872

Niche height 88

IR(B)S.. 41.. / IKS 41Ve00 / IKS 41Ve01	
A (mm)	541
B (mm)	545
C (mm)	1213

Niche height 122

IR(B)S.. 51.. / SIFNS.. 51..	
A (mm)	541
B (mm)	545
C (mm)	1770

Niche height 1780

*** Depending on model and options**

4 Recess dimensions

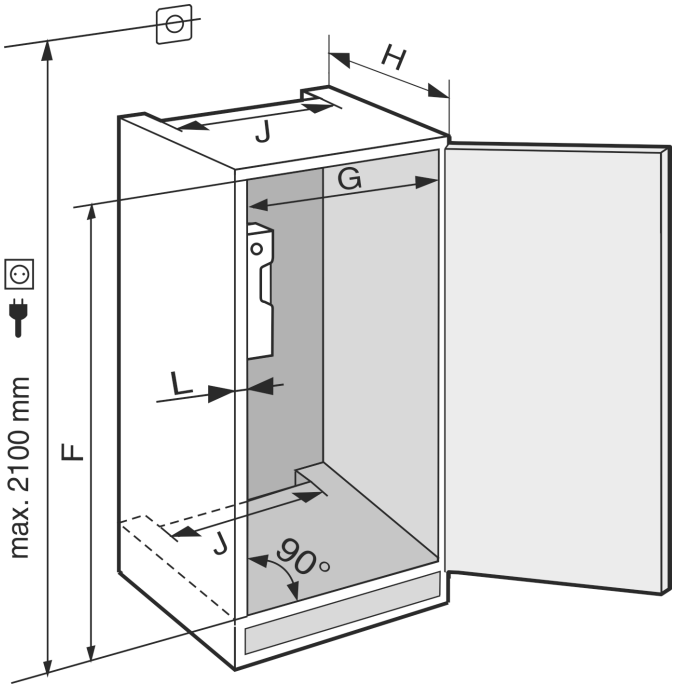

Fig. 4

IRS.. 39.. / IFS.. 39..	
F (mm)	874 to 890
G (mm)	560 to 570
H (mm)	min. 550, recommended 560
J (mm)	min. 500
L (mm)	max. 19

IR(B)S.. 41.. / IKS 41Ve00 / IKS 41Ve01	
F (mm)	1216 to 1236
G (mm)	560 to 570
H (mm)	min. 550, recommended 560
J (mm)	min. 500
L (mm)	max. 19

IR(B)S.. 51.. / SIFNS.. 51..	
F (mm)	1772 to 1788
G (mm)	560 to 570
H (mm)	min. 550, recommended 560
J (mm)	min. 500
L (mm)	max. 19

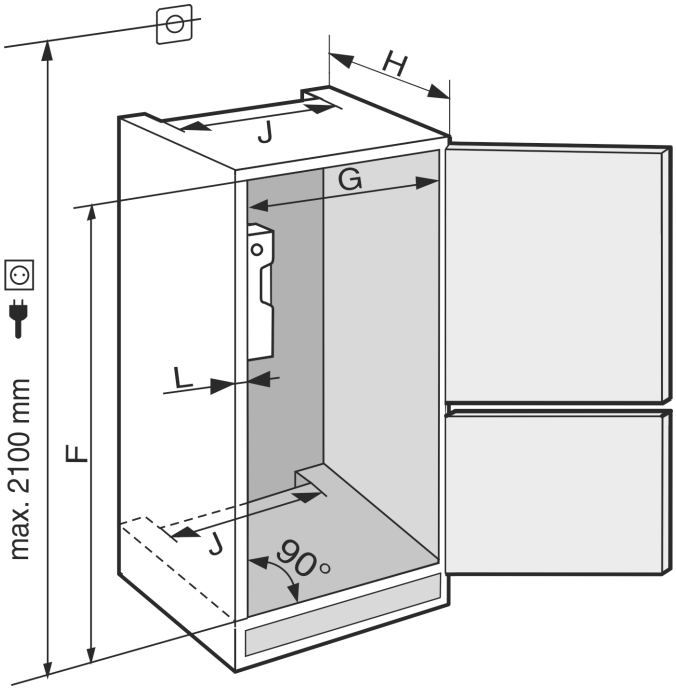

Fig. 5

IC(N)S.. 51.. / ICB(N)S.. 51.. / IKGNS 51Vd03 / IKGS 51Vd02 / IKGS 51Ve03 / IKGBNS 51Vd23	
F (mm)	1772 to 1788
G (mm)	560 to 570
H (mm)	min. 550, recommended 560
J (mm)	min. 500
L (mm)	max. 19

The specified energy consumption was determined with a kitchen unit depth of 560 mm. The appliance will work properly at a kitchen unit depth of 550 mm, but with a slightly higher energy consumption.

- ▶ Check the wall thickness of adjacent cabinets: They must have a minimum of 16 mm .
- ▶ Only fit the appliance into stable, solid kitchen units. Secure the unit against tipping.
- ▶ Align the cabinets with a spirit level and a try square. If necessary, level them by putting something underneath them.
- ▶ Make sure floor and the side panels of the cabinet are at right angles to each other.

5 Ventilation requirements

NOTICE
Covered vents!
Damage. Appliance can overheat, which can reduce the service life of various parts of the appliance and lead to operational impairments.

- ▶ Always make sure there is good ventilation.
- ▶ Always keep vents or ventilation grids in the appliance housing and in the kitchen furniture (fully integrated appliance) unobstructed.
- ▶ Always keep the fan air vents unobstructed.

Always follow the required ventilation gaps:

- The depth of the ventilation shaft at the back of the cabinet must be at least 38 mm.

- At least 200 cm^2 is required for the ventilation gap cross sections in the plinth and the housing cabinet.
- As a rule, the larger the ventilation cross-section, the more efficiently the appliance will run.

Sufficient ventilation is required for the operation of the appliance. The ventilation grids provided ensure an effective ventilation cross-section on the appliance of 200 cm^2. If you replace the ventilation grids with a cover plate the ventilation cross-section must be as least as large as the ventilation grid provided by the manufacturer.

6 Transporting appliance

Note when transporting the appliance:

▶ Transport the appliance upright.
▶ Use two people to transport the appliance.

During first use:

▶ Transport the appliance packaged.

When transporting appliances after initial commissioning (e. g. moving or cleaning):

▶ Empty the appliance.
▶ Secure the door against unintentional opening.

7 Unpacking the appliance

Before you connect the appliance, report any damage immediately to the delivery company.

▶ Check the appliance and the packaging for damage during transport. Contact the supplier immediately if you suspect any level of damage.
▶ Remove all materials from the back or the side walls of the appliance that may prevent proper installation or ventilation.
▶ Remove all protective films from the appliance. Do not use sharp or pointed objects for this.

8 Setting up the appliance

CAUTION

Risk of injury due to heavy appliance!

▶ Have two people transport the appliance to its installation site.

WARNING

Danger of injury and damage due to the appliance being unstable!
The appliance can topple over.

▶ Secure the appliance as described in the instructions.

WARNING

Fire hazard and danger of damage!

▶ Do not place appliances emitting heat e.g. microwaves, toasters etc. on the appliance!

If possible, have the appliance installed in the kitchen unit by a professional.

Do not install the appliance on your own.

8.1 After installation

▶ Remove all transport safety components.
▶ Clean the appliance (see User Guide, Cleaning the appliance).

9 Disposing of packaging

WARNING

Danger of suffocation due to packing material and plastic film!

▶ Do not allow children to play with packing material.

The packaging is made of recyclable materials:

- corrugated board/cardboard
- expanded polystyrene parts
- polythene bags and sheets
- polypropylene straps
- nailed wooden frame with polyethylene panel*

▶ Take the packaging material to an official collecting point.

10 What the symbols mean

	Risk of injury here! Follow the safety notes!
	These instructions apply to a range of models. Follow this step only if it applies to your appliance.
	To install, please follow the detailed description in the Guide.
	This section applies either to a single-door appliance or a double-door appliance.
	Choose one of the options: Appliance with right-hinged door or appliance with left-hinged door.
	Installation step required if your model has IceMaker and/or InfinitySpring.
	Just loosen the screws or tighten them slightly.
	Tighten the screws.
	Check to see if the next step applies for your model.
	Check the correct assembly/seat of the components used.

* Depending on model and options

	Measure the specified measurement and adjust if necessary.
	Tool for assembly: Metre rule
TORX® 20	Tool for assembly: Cordless screwdriver and attachments A lengthwise bit insert is recommended for good access to the screws.
	Tool for assembly: Spirit level
SW7 SW10	Tool for assembly: Size 7 and size 10 spanners
	Two people are required for this step.
	Carry out this step at the marked place on the appliance.
	Aids for assembly: String
	Aids for assembly: Square
	Aids for assembly: Screwdriver
	Aids for assembly: Scissors
	Aids for assembly: Non-permanent marker pen
	Accessory kit: Remove components
	Dispose of components that are no longer needed.

11 **** freezer compartment door*

It is very easy to reposition the hinge of the **** freezer compartment door if the main door hinge is swapped. If the main door of the appliance can be opened to more than 115° (1), you can open the freezer compartment without repositioning the hinge. If the opening angle (2) of the appliance door is less than this, the hinge must be repositioned.

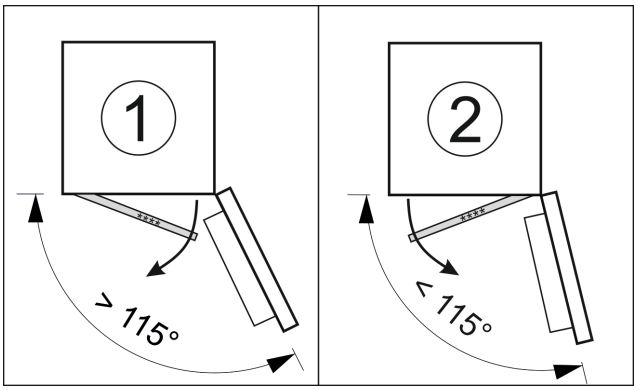

Fig. 6

11.1 Moving the door hinge

The slider for moving the door hinge is located on the back of the **** freezer compartment door at the bottom.

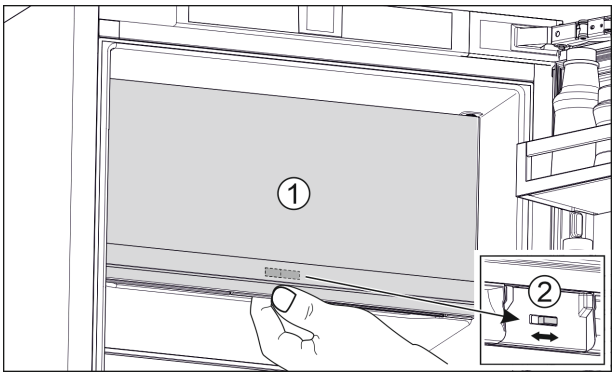

Fig. 7

▶ Close the **** freezer compartment door (1).
▶ Grab the **** freezer compartment door from below.
▶ Move the slider (2) either to the right or to the left.

12 Changing the door direction

Tool

Fig. 8

Changing the door direction

WARNING

Danger of injury if the door falls out!

If the fixing parts are not screwed in sufficiently the door may fall off. This may lead to serious injuries. In addition, the door may not close, thus impairing the cooling performance of the appliance.

▶ Screw the upper and lower bearing brackets firmly to 4 Nm.

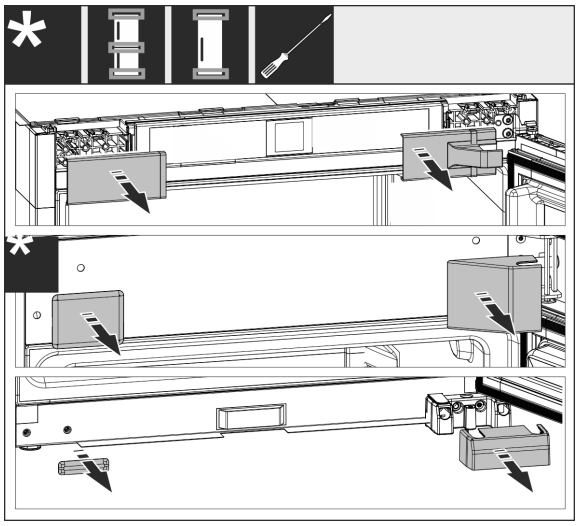

Fig. 9

▶ Remove any mounted covers, if necessary, use a slotted screwdriver to lift them off.

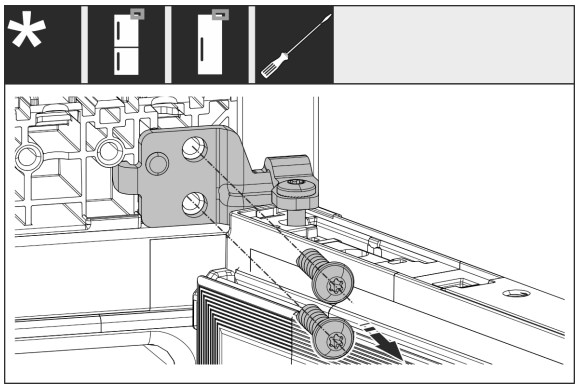

Fig. 10

▶ Loosen the screws on the bearing block. Secure the door against falling out.

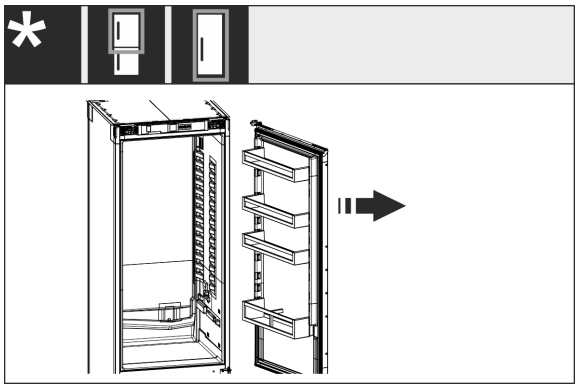

Fig. 11

▶ Remove the door together with the still screwed-on bearing bracket.

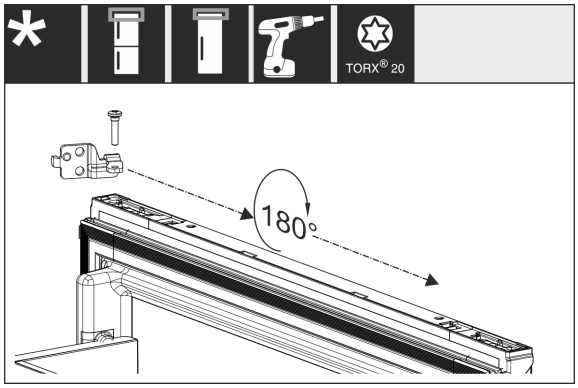

Fig. 12

▶ Turn and shift the bearing block by 180°.

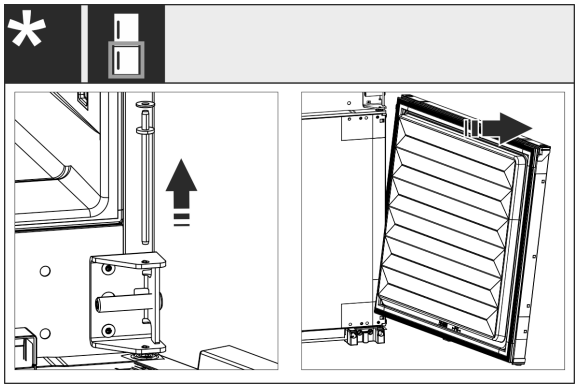

Fig. 13

▶ Remove the lower door: Pull out the middle bearing bolt with the disc. Secure the door against tipping out. Lift the door up.

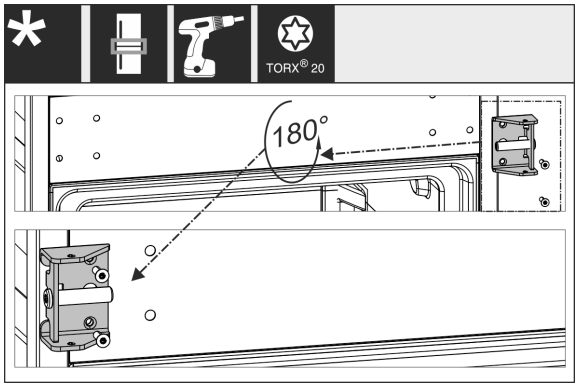

Fig. 14

▶ Shift the middle bearing block and screw it tightly.

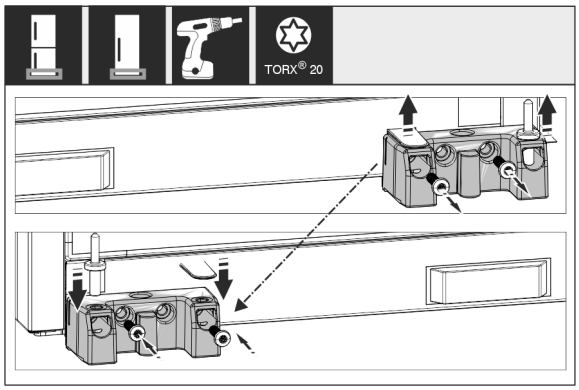

Fig. 15

▶ Shift the bottom bearing block and screw it tightly.

*** Depending on model and options**

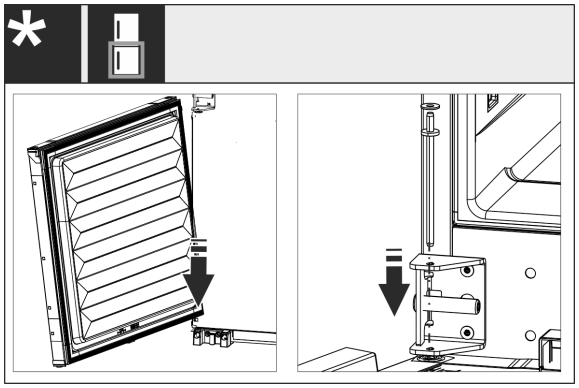

Fig. 16

▶ For combined units: Mount the lower door: Place on the hinge bolt at the bottom and rotate into place at the top. Insert the middle bearing bolt into the door from above through the middle bearing block.

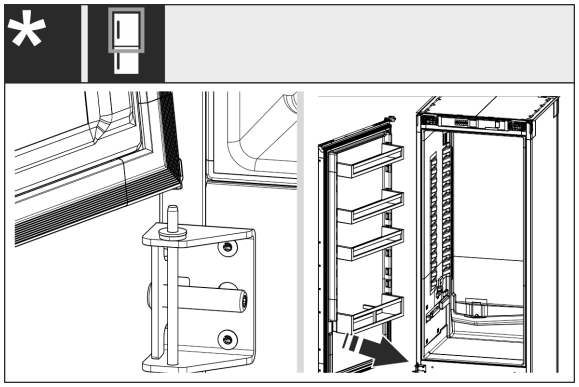

Fig. 17

▶ For combined units: Mounting the top door: Place at the bottom of the middle bearing bolt.

▶ For single-door appliances: Fitting the door: Place it on the bearing pin at the bottom.

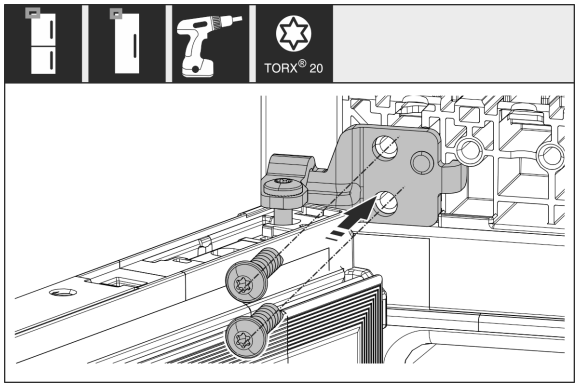

Fig. 18

▶ Screw the top bearing block to the housing.

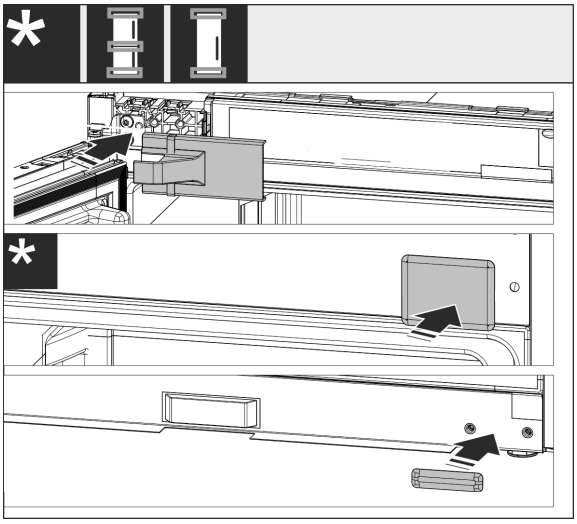

Fig. 19

▶ Refit the covers on the handle side. Reinstall the covers on the hinge side only once the appliance is installed in the cabinet.

▶ Check all screws and retighten if necessary.

13 Installing the appliance in the recess

Tools and materials

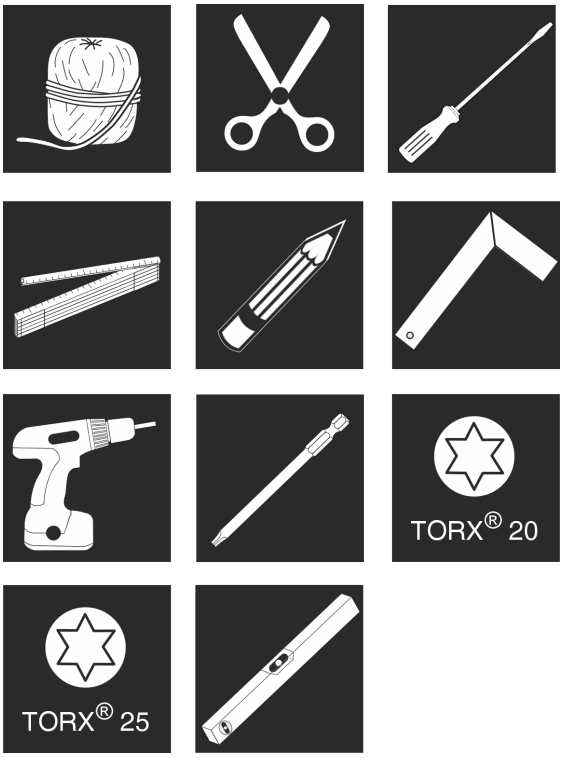

Fig. 20

Supplied assembly parts

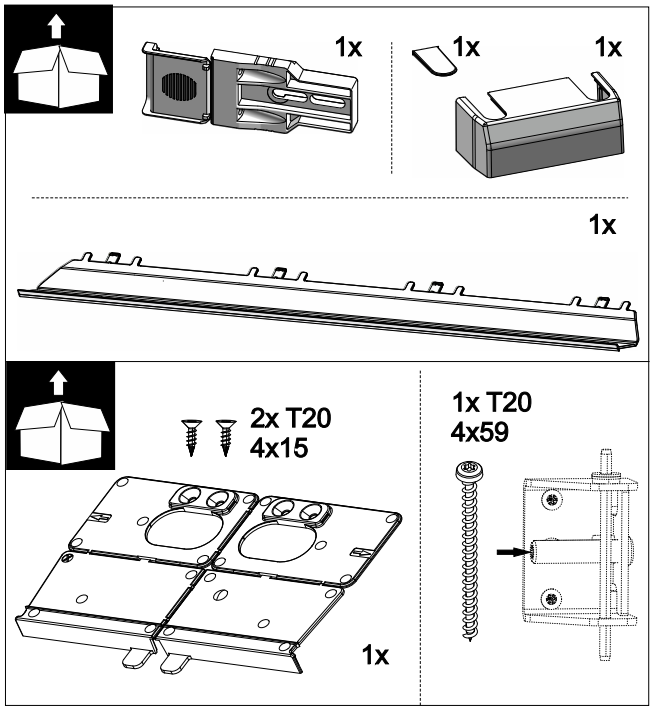

Fig. 21

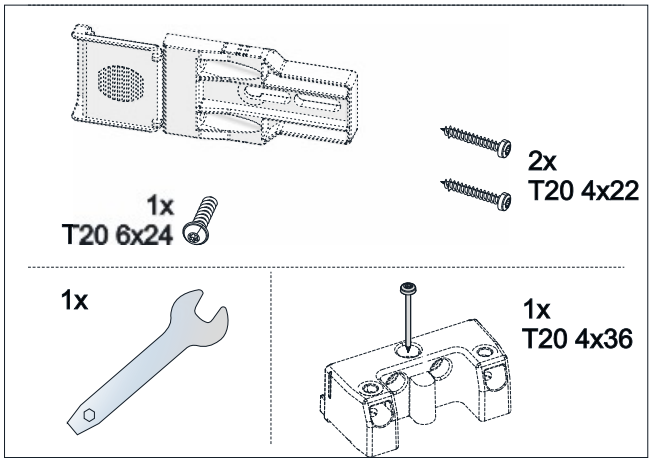

Fig. 22

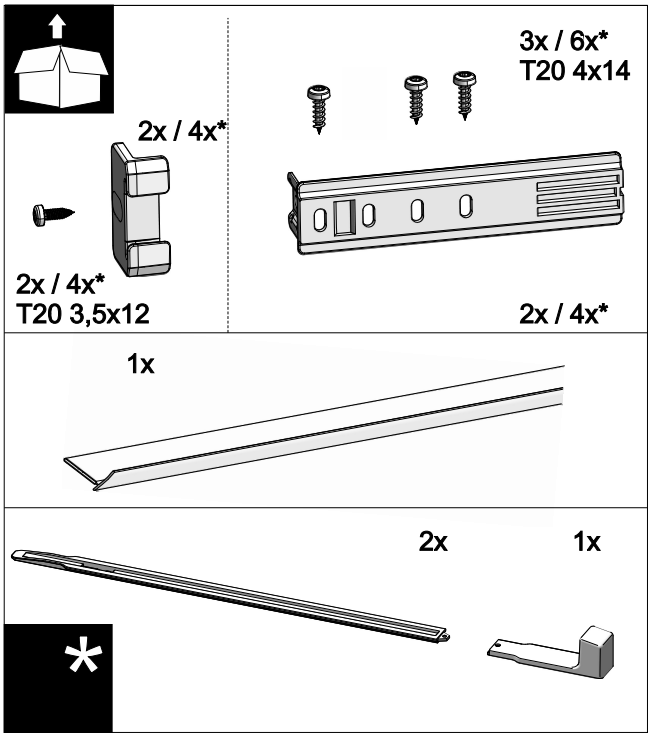

Fig. 23

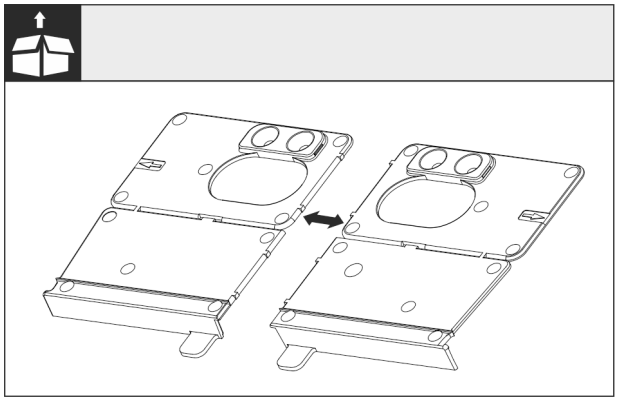

Fig. 24 Floor mounting bracket

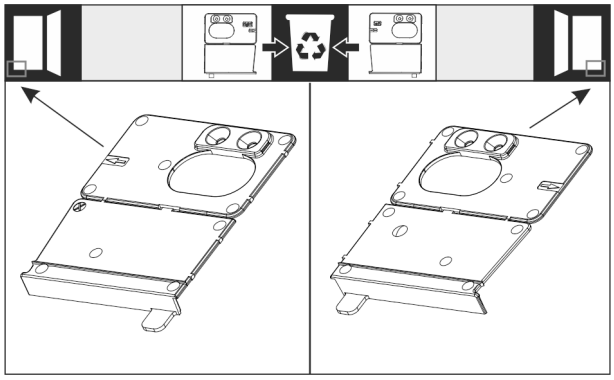

Fig. 25

▶ Separate the mounting bracket at the perforation. Dispose of either the right or left mounting bracket, depending on which way the door opens.

*** Depending on model and options**

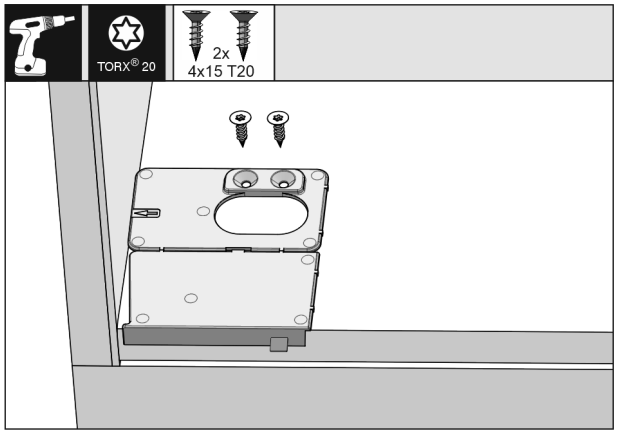

Fig. 26

NOTICE
Correct installation depth of the appliance
▶ Using the mounting bracket ensures the correct installation depth of the appliance.

▶ Screw the mounting bracket base on the right or left, flush to the side wall on the base of the cabinet recess, depending on which way the door opens. The mounting bracket is always mounted on the handle side.

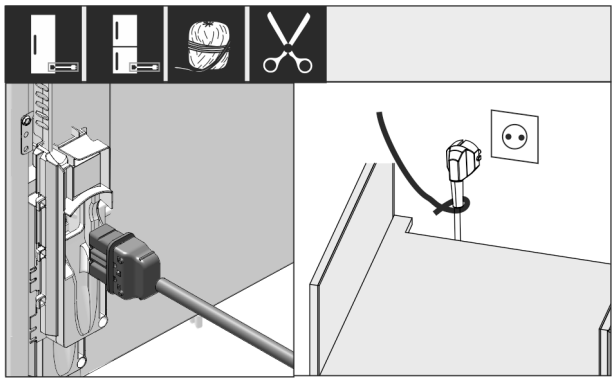

Fig. 27
▶ Remove the mains cable from the package.
▶ Plug the mains cable's IEC socket completely into the appliance plug on the back of the appliance. Ensure that the IEC socket is tight.
▶ Use a cord to lay the mains plug to a freely accessible socket.

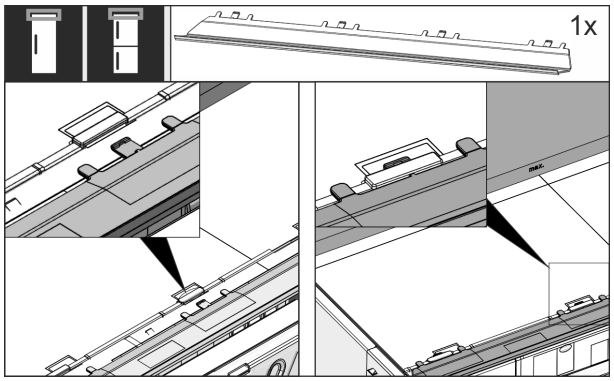

Fig. 28
▶ Insert the levelling panel. The panel can be moved to both sides.

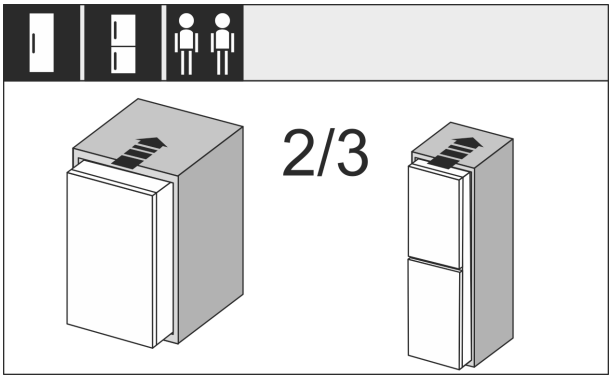

Fig. 29
▶ Insert the appliance 2/3 of the way into the recess.

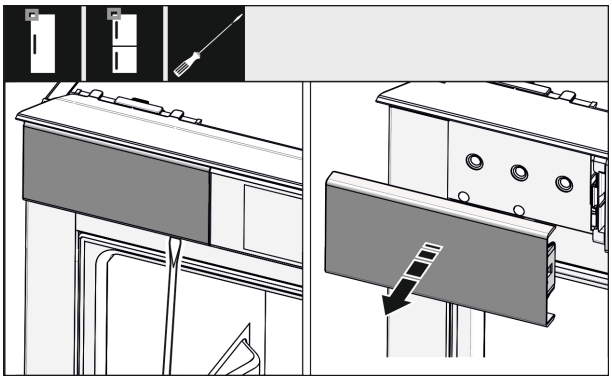

Fig. 30
▶ Use a screwdriver to loosen the cover at the top left and then remove it.
▶ If already mounted, remove the other covers.

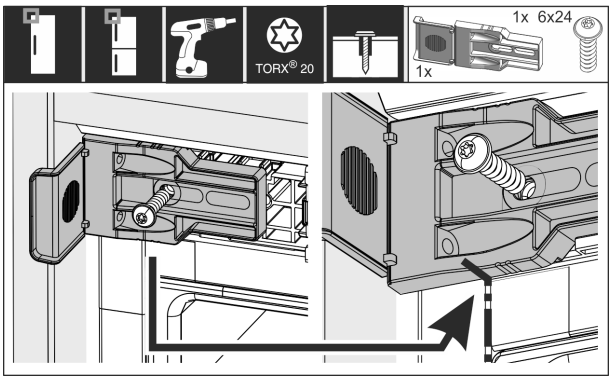

Fig. 31
▶ Tighten the mounting bracket. The bracket should no longer move. The marking of the mounting bracket is ideally located on the joint of the housing.

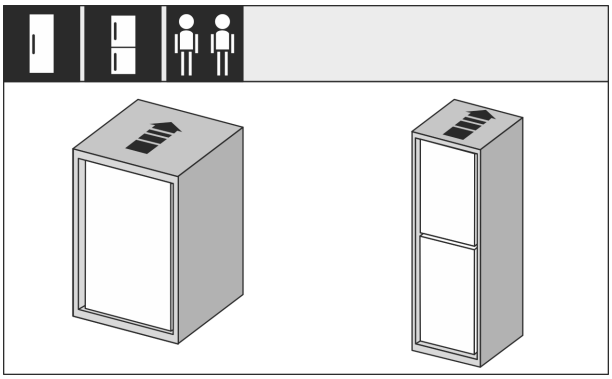

Fig. 32

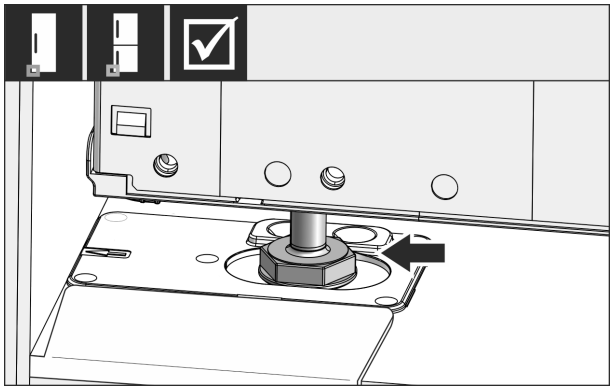

Fig. 33

WARNING

Risk of fire due to short circuit!

- ▶ When you push the appliance into the niche: do not kink, jam or damage the mains cable.
- ▶ The appliance must not be operated with a defective mains cable.

▶ Insert the appliance all the way into the unit recess. The adjustable foot must sit in the recess of the mounting bracket.

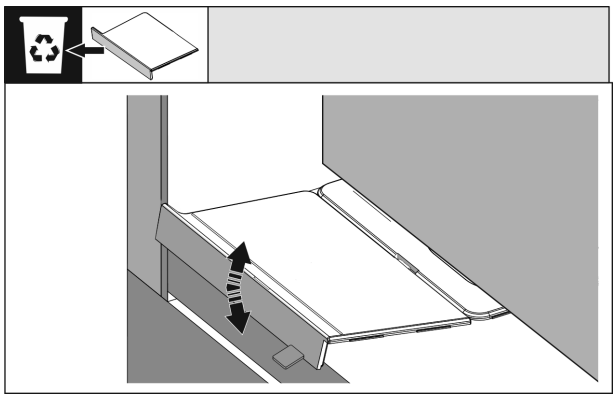

Fig. 34

▶ Removing the front stopper of the floor mounting bracket: Loosen the stopper by moving it and, if necessary, pull it off using pliers.

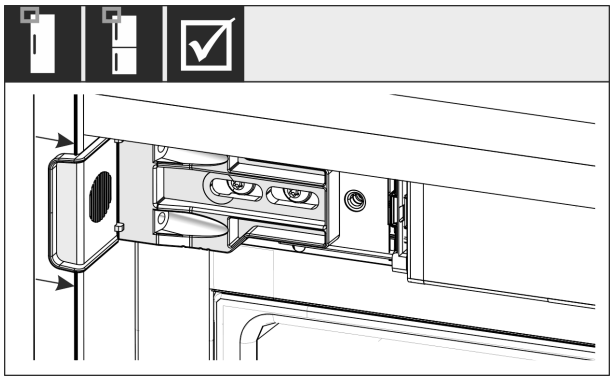

Fig. 35

▶ Check that the appliance is flush in the cabinet recess. The mounting bracket must be attached to the side wall of the cabinet recess.

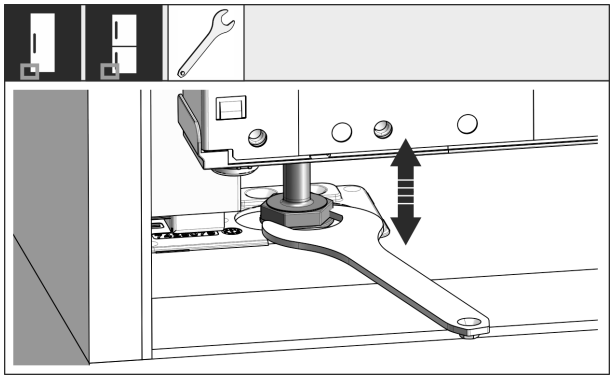

Fig. 36

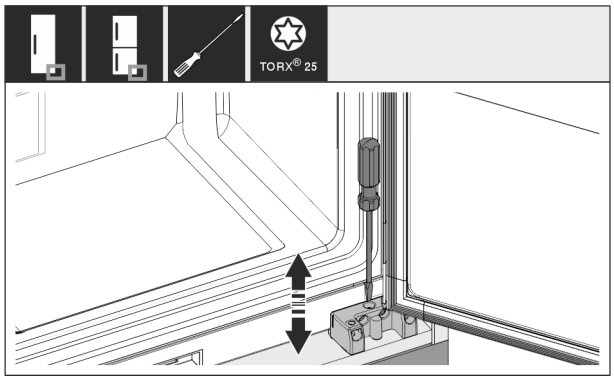

Fig. 37

▶ If necessary, use the adjustable feet to correct the tilt of the appliance.

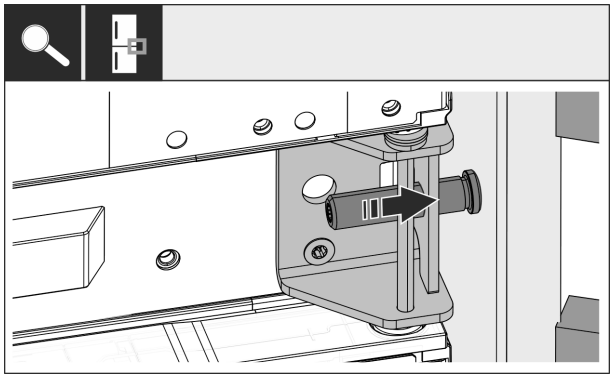

Fig. 38

▶ For combinations: Secure the appliance into the cabinet recess on the hinge side using the middle bearing block. Make sure that the cabinet wall is not damaged by the adjusting screw.

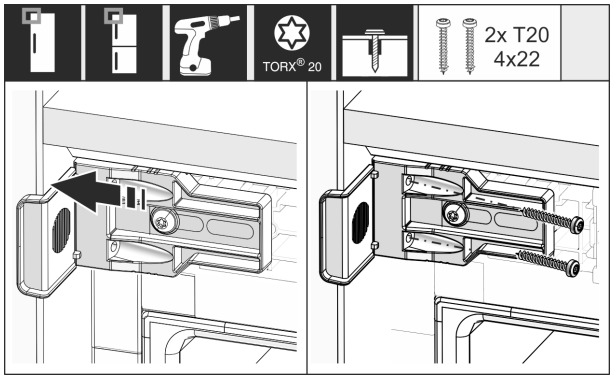

Fig. 39

▶ Tightly screw the bracket to the side wall of the cabinet recess.

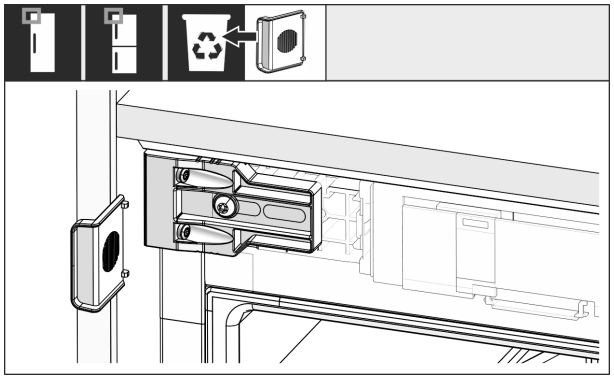

Fig. 40

▶ Remove the stop from the bracket on the handle side and dispose of it.

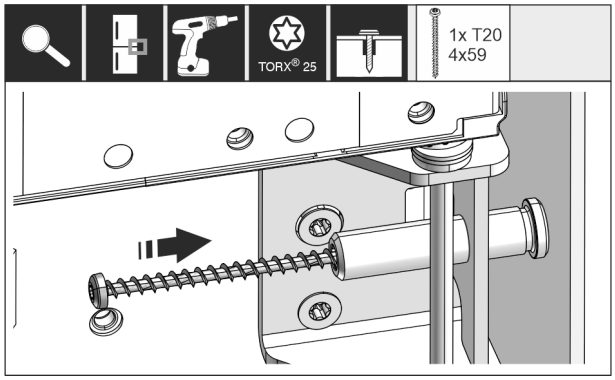

Fig. 41

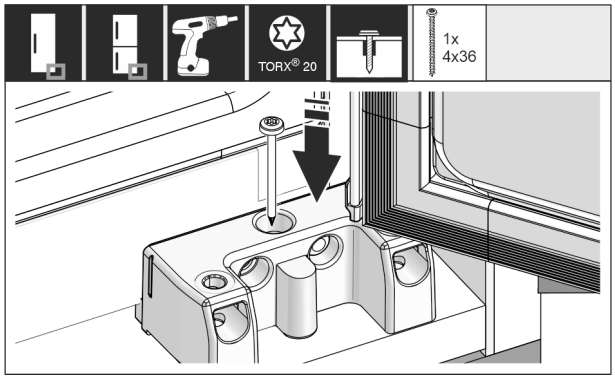

Fig. 42

▶ Screw the appliance into the recess on the hinge side using the middle and bottom bearing brackets.

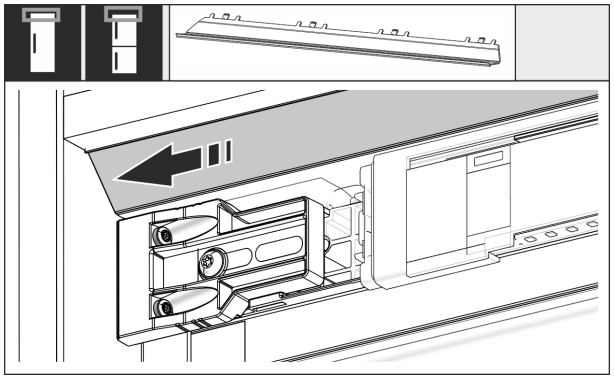

Fig. 43

▶ Slide the panel so that it sits flush on the side of the cabinet wall.

From a niche height of 1400 mm, install levelling rails:

Fig. 44

You must installed levelling rails under the appliance from a niche height of 1400 mm. The levelling rails **reduce the noise level**. Two levelling rails and an installation handle are enclosed as standard from a niche height of 1400 mm.

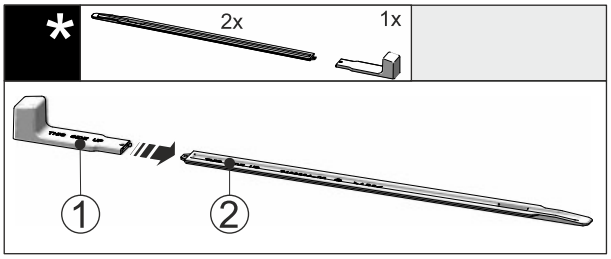

Fig. 45

▶ Attach the installation handle *Fig. 45 (1)* to the levelling rail *Fig. 45 (2)*.

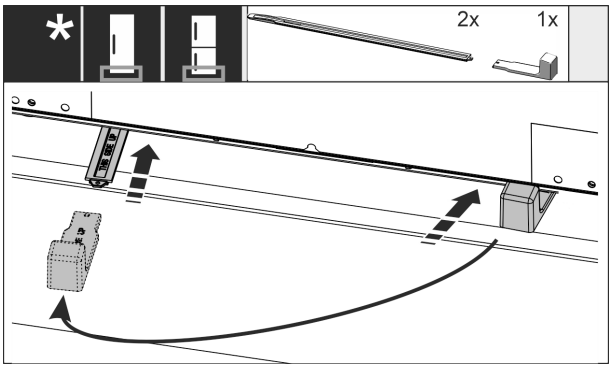

Fig. 46

▶ Push the levelling rail into the guide under the appliance base until it reaches the stop.

▶ Remove the installation handle and attach it to the second levelling rail.

▶ Proceed in the same way for the second levelling rail.

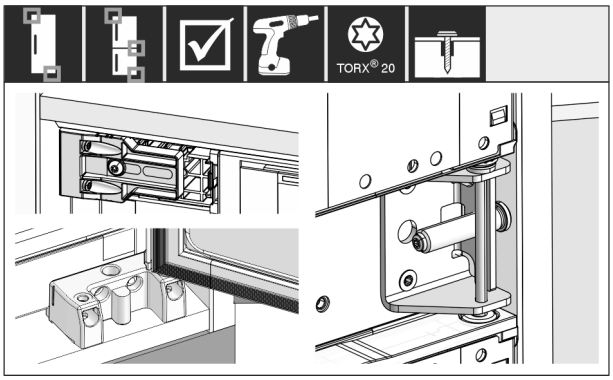

Fig. 47

▶ Check all screws and retighten them.

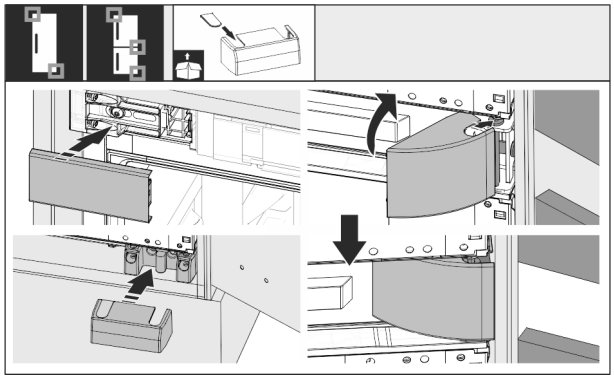

Fig. 48

▶ Put all the covers on.

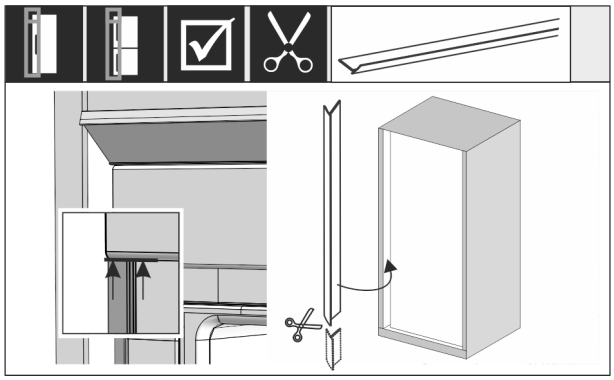

Fig. 49

▶ If necessary: Shorten the sealing strip as necessary with a sharp pair of scissors.

▶ Position the sealing strip below the top cover and press it in. The sealing strip is magnetic.

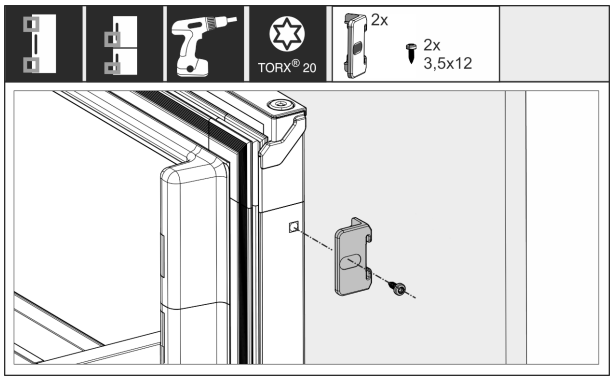

Fig. 50

Attaching custom panel to the appliance door:

▶ Open the door fully.

▶ Mount bracket onto the appliance door.

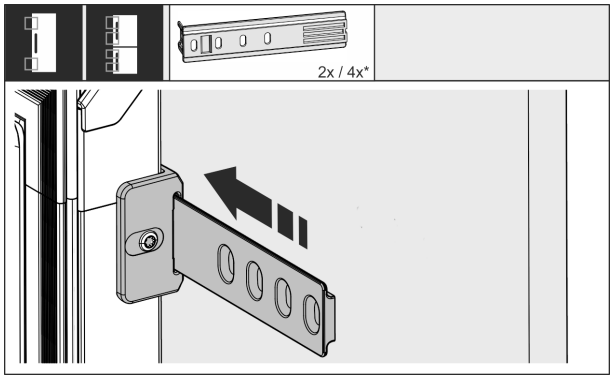

Fig. 51

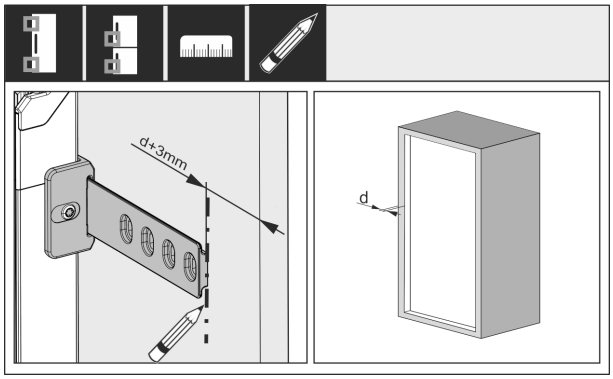

Fig. 52

The gap between the end of the rail and the outer edge of the custom panel is the thickness of the unit side wall + 3 mm.

▶ Mark using a non-waterproof pen.

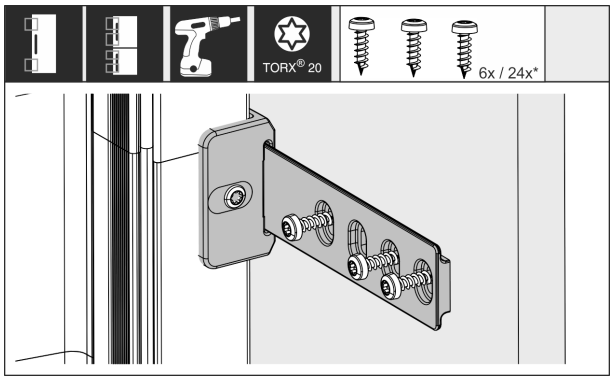

Fig. 53

▶ Push the rails into the bracket and screw to the cabinet door.

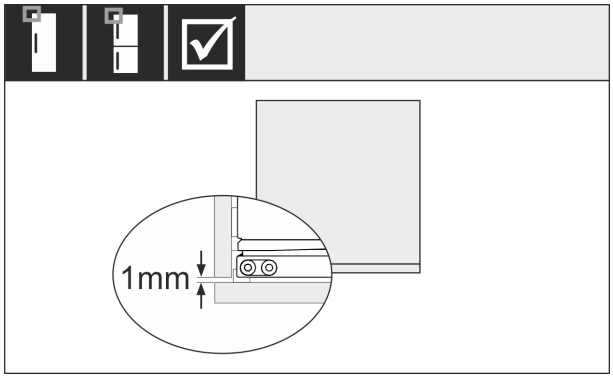

Fig. 54

▶ Check that the seal runs all the way around the appliance door.

▶ Make sure the custom panel does not open onto the side wall of the unit recess. Liebherr recommends a minimum gap of 1 mm.

*** Depending on model and options**

14 Connecting the appliance to the power supply

WARNING
Danger of electric shock and injury due to damaged appliance or damaged mains cable!
Danger of cuts and fatal injuries. If the appliance or the mains cable is damaged during transport, you may be electrocuted. You could also cut yourself on damaged parts of the appliance housing.
▶ Check the appliance and the mains cable for damage after transport.
▶ Never put the appliance into operation if the appliance or the mains cable are damaged.
▶ Contact Customer Service.

You can connect your appliance to the mains using the power cable supplied separately. The mains power cable has an appliance coupler at one end and a mains plug at the other end.

Make sure that the following requirements are fulfilled:

- The appliance and power cable are undamaged.
- The appliance is installed in accordance with the regulations. (see 13 Installing the appliance in the recess)
- Requirements for the electrical connection are met. (see 2 Installation conditions)
- Dimensions for connection in accordance with regulations are known and observed.
- Mains voltage and frequency correspond to the specifications on the type plate.
- The socket is earthed according to the regulations and fused.
- The fuse tripping current is between 10 A and 16 A.
- The socket is easily accessible and is not behind the appliance. (see 4 Recess dimensions)

NOTICE
Danger of damage to incorrect operation!
Damage to the electrical components of the appliance.
▶ Only use the supplied mains cable.

WARNING
Danger of fire due to incorrect connection!
Burns.
Damage to the appliance.
▶ Do not use an extension cable.
▶ Do not use distributor blocks.

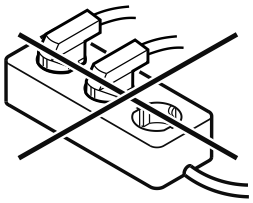

NOTICE
Danger of damage to incorrect connection!
Damage to the appliance.
▶ Do not connect the appliance to a stand-alone inverter, e.g. solar power systems and petrol generators.

▶ Connect the mains cable plug to the power supply. Ensure that the plug is tightly in the socket.
▷ The Liebherr logo appears in the display.
▷ The display switches to the standby symbol.
▷ If no action occurs within 60 seconds: The standby symbol fades or disappears.
▷ The appliance is connected. For information regarding first use, see the following section or the operating instructions.

home.liebherr.com/fridge-manuals

EN built-in fridge and freezers, sliding door

Issue date: 20250718

Part number index: 7088417-00

Liebherr-Hausgeräte GmbH
Memminger Straße 77-79
88416 Ochsenhausen
Deutschland