Installation Guide

Quality, Design and Innovation

home.liebherr.com/fridge-manuals

LIEBHERR

Contents

1 General safety instructions ... 2

2 Setup conditions ... 3
2.1 Space ... 3
2.2 Fitting the appliance into the kitchen unit ... 3
2.3 Setting up multiple appliances ... 4
2.4 Electrical connection ... 4

3 Installation dimensions ... 4

4 Ventilation requirements ... 4

5 Transporting the appliance ... 5

6 Unpacking the appliance ... 5

7 Mounting wall spacers ... 5

8 Setting up the device ... 5

9 Setting up the appliance level ... 5

10 After setup ... 5

11 Disposal of packaging ... 5

12 Explanatory symbols used ... 6

13 ** freezer compartment door* ... 6**
13.1 Moving the door hinge ... 7

14 Reversing the door ... 7
14.1 Removing the door ... 7
14.2 Reversing the freezer compartment door* ... 8
14.3 Moving the upper bearing parts to the other side. 8
14.4 Moving the lower bearing parts to the other side.. 9
14.5 Moving the door bearing parts to the other side.... 10
14.6 Fitting the door ... 10
14.7 Aligning the door ... 11
14.8 Fitting the covers ... 11

15 Connecting the appliance ... 11

The manufacturer is constantly working to improve all types and models. Therefore, please be aware that we reserve the right to make changes to the shape, equipment and technology.

Symbol	Explanation
	Read instructions Please read the information in these instructions carefully to understand all of the benefits of your new appliance.
	Full instructions on the internet You can find detailed instructions on the internet using the QR code on the front of these instruction or by entering the service number at **home.liebherr.com/fridge-manuals**. The service number can be found on the serial tag: 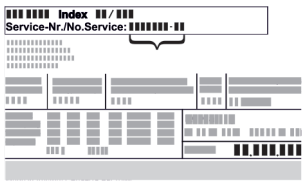 *Fig.* Example illustration
	Check appliance Check all parts for transport damage. If you have any complaints, please contact your agent or customer service.

Symbol	Explanation
	Differences These instructions apply to a range of models, so there may be differences. Sections that apply to certain models only are indicated by an asterisk (*).
	Instructions and results Instructions are marked with a ▶. Results are marked with a ▷.
	Videos Videos about the appliances are available on the YouTube channel of Liebherr-Hausgeräte.

1 General safety instructions

- Please keep this assembly manual in a safe place so you can refer back to it at any time.
- If you pass the appliance on, please hand this assembly manual to the new owner.
- Read this assembly manual before installation and use in order to use the appliance safely and correctly. Follow the instructions, safety instructions and warning messages included at all times. They are important for ensuring you can operate and install the appliance safely and without any problems.
- First read the general safety instructions in the “General safety instructions” section of the **operating instructions**, which accompany these installation instructions, and follow them. If you cannot find the **operating instructions**, you can download the **operating instructions** from the internet by entering the service number at **home.liebherr.com/fridge-manuals**. The service number can be found on the serial tag:

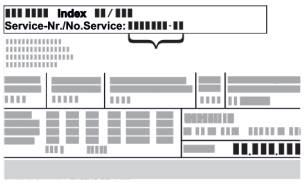

- **Observe the warning messages and other detailed information in the other sections when installing the appliance:**

	DANGER	indicates a hazardous situation, which if not avoided, will result in death or serious injury.
	WARNING	indicates a hazardous situation, which if not avoided, could result in death or serious injury.

* Depending on model and options

⚠	CAUTION	indicates a hazardous situation, which if not avoided, will result in minor or moderate injury.
	NOTICE	indicates a hazardous situation, which if not avoided, could result in damage to property.
	Note	indicates useful advice and tips.

2 Setup conditions

⚠ **WARNING**
Risk of fire due to moisture!
If live parts or the power cord get wet, this can cause a short circuit.
▶ The appliance is designed for use in enclosed spaces. Do not operate the appliance in open space or in damp areas or where there is spray.

Normal use
- Only set up and use the appliance in enclosed spaces.

2.1 Space

⚠ **WARNING**
Leaking refrigerant and oil!
Fire. The refrigerant contained within the appliance is environmentally friendly, but flammable. The oil contained within the appliance is flammable. Escaping refrigerant and oil can ignite if they are of high enough concentration and are exposed to an external heat source.
▶ Do not damage the pipelines of the coolant circuit and the compressor.

- If the appliance is installed in a very damp environment condensate water may form on the outside of the appliance.
  Always make sure the installation area is well ventilated. .
- The more refrigerant is in the appliance, the larger the room must be where the appliance is located. In the case of a leak, a flammable gas-air mixture may be created in a room that is too small. For every 8 g of refrigerant, the installation space must be at least 1 m^3. Specifications regarding the refrigerant contained within the appliance can be found on the rating plate inside the appliance.

2.1.1 Installation surface

- The floor of the installation site must be horizontal and level.
- The height of the appliance base must be the same as the surrounding floor.

2.1.2 Installation position

- Do not install the appliance in direct sunlight or next to an oven, heater, or similar heat source.
- Always stand the appliance backed directly to the wall using the enclosed wall spacers (see below).

2.2 Fitting the appliance into the kitchen unit

The appliance can be built into kitchen cabinets.

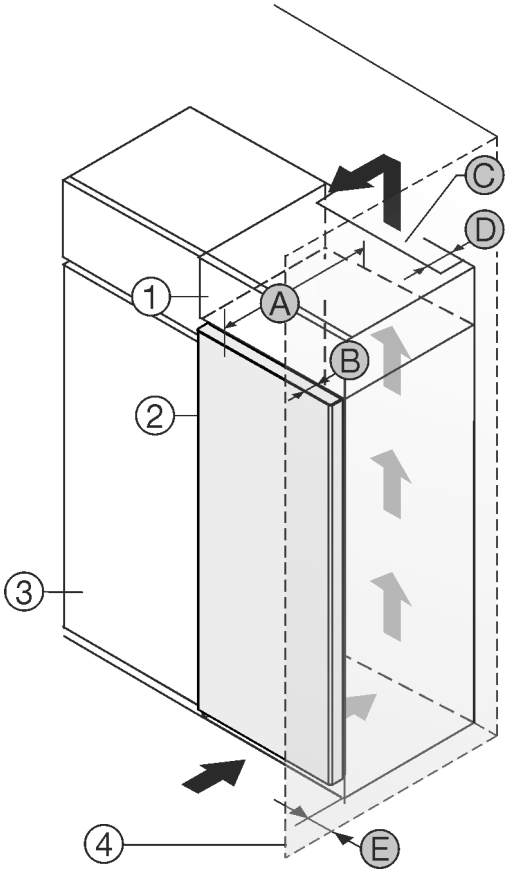

Fig. 1

(1) Top cupboard
(2) Appliance
(3) Kitchen cabinet
(4) Wall
(A) Appliance depth
(B) Door depth
(C) Ventilation cross-section
(D) Distance to the rear of the appliance
(E) Distance to the side of the appliance

A	B	C	D	E
675 mm*	65 mm	Min.300 cm^2	Min.50 mm	Min.13 mm

Appliances without handle / with recessed grip

Set up the appliance directly next to the kitchen cabinet *Fig. 1 (3)*.

There must be a ventilation shaft at the depth *Fig. 1 (D)* of the back of the top cupboard over the entire width of the top cupboard.

The cross section of the ventilation gap *Fig. 1 (C)* must be maintained below the ceiling.

If the appliance is installed with the hinges next to a wall *Fig. 1 (4)*, the distance between the appliance and the wall must be at least 13 mm.

If the appliance is installed with the hinges next to a wall *Fig. 1 (4)*, the distance between the appliance and the wall must be at least 20 mm.

In order to be able to fully open the door, the appliance must protrude by the depth *Fig. 1 (B)* of the door from the front of the kitchen cabinet. Regardless of the depth of the kitchen cabinets *Fig. 1 (3)* and use of wall spaces, the appliance can protrude further.

Ensure that the following conditions are met:
- Recess dimensions are adhered to .
- Ventilation requirements are complied with (see 4 Ventilation requirements) .

2.3 Setting up multiple appliances

NOTICE
Risk of damage caused by water condensate!
▶ Do not install this device directly beside another fridge/ freezer compartment.

These appliances are designed for different types of installation. Only combine appliances if the appliances are designed for this. The following table shows the installation options by model:

Setup type	Model
Single	All models
Side-by-Side (SBS)	Model that start with **S...**.
Side-by-side with a distance of 70 mm between appliances Otherwise condensation will build up between the units.	All models without side wall heating 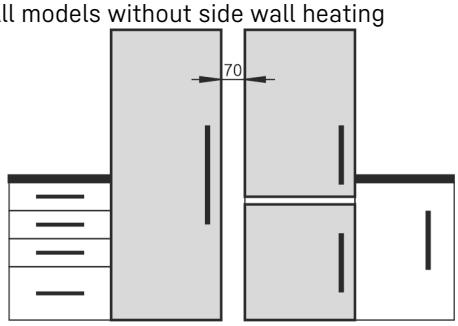 *Fig. 2*

Assemble appliances according to separate installation instructions.

2.4 Electrical connection

WARNING
Improper use!
Fire. If a power cable/plug comes into contact with the back of the appliance, the power cable/plug can be damaged by appliance vibrations and this may result in a short circuit.
▶ Install the appliance so that it does not touch any plugs or power cables.
▶ Do not connect any appliances to sockets in the area of the back of the appliance.
▶ Multi-sockets/power distributors and other electronic appliances (such as halogen transformers) may not be placed and operated at the back of appliances.

3 Installation dimensions

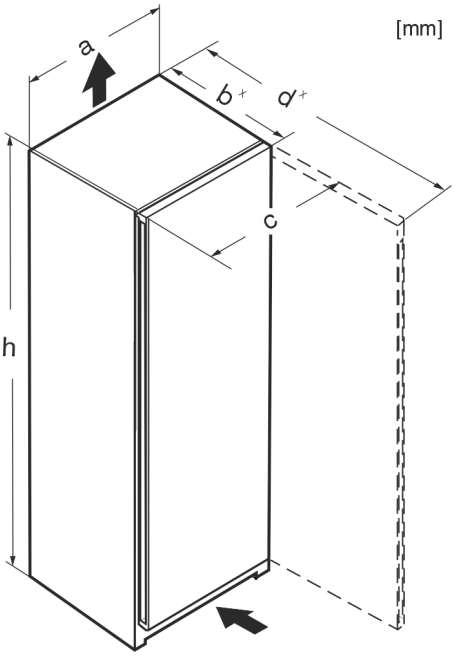

Fig. 3

	h	a	b	c	d
Rf 4200 /e/f 42..	1255	597	675[x]	609	1217[x]
R(sf)(f) 4600 / e/f 46..	1455	597	675[x]	609	1217[x]
Kf 46Z00	1455	597	675[x]	609	1217[x]
R(sf)(e) 4620	1455	597	675[x]	609	1217[x]
Rf 5000 /e/d 50	1655	597	675[x]	609	1217[x]
R(sf)(e) 5020	1655	597	675[x]	609	1217[x]
R(sf)(e) 5220	1855	597	675[x]	609	1217[x]
Ksfe 52Z20	1855	597	675[x]	609	1217[x]
RB(sf)(e) 5220	1855	597	675[x]	609	1217[x]
SR(bd)(sd)(sf)(e)(h) 5220	1855	597	675[x]	609	1217[x]
SRBsfe 5220	1855	597	675[x]	609	1217[x]
RDsfe 5220	1855	597	675[x]	609	1217[x]
RB(sf)(e) 5221	1855	597	675[x]	609	1217[x]

[x] For appliances with supplied wall spacers, the dimensions must be increased by 15 mm .

4 Ventilation requirements

NOTICE
Risk of damage due to overheating in the case of insufficient ventilation!
In the case of insufficient ventilation, the compressor can be damaged.
▶ Make sure there is sufficient ventilation.
▶ Observe the ventilation requirements.

If the appliance is integrated in a fitted kitchen, the following ventilation requirements must be met:

- The spacing fins on the back of the appliance are used to ensure sufficient ventilation. These must not lie in cavities or recesses in their final installation position.
- Basically, the larger the ventilation gap, the more energy the appliance saves during operation.

*** Depending on model and options**

5 Transporting the appliance

- ▶ Transport the appliance in its packaging.
- ▶ Transport the appliance upright.
- ▶ Use two people when transporting the appliance.

6 Unpacking the appliance

If the appliance is damaged check with the supplier immediately before connecting it.

- ▶ Check the appliance and packaging for damage during transport. If you suspect any damage, please contact your supplier immediately.
- ▶ Remove all materials that could prevent it from being installed properly or prevent proper ventilation from the back or the side panels of the appliance.
- ▶ Remove all protective films from the appliance. Do not use sharp or pointed objects for this.
- ▶ Remove the mains cable from the back of the appliance. Also remove the cable holder, otherwise there will be vibration noise!

7 Mounting wall spacers

The spacers must be used in order to reach the declared energy consumption levels as well as to avoid the formation of condensate water at high levels of ambient humidity. These will extend the depth of the appliance by approx. 15 mm. The appliance is fully functional if the spacers are not used, but it will consume slightly more energy.

- ▶ If wall spacers are supplied with an appliance, these wall spaces must be mounted on the left and right of the back of the appliance.

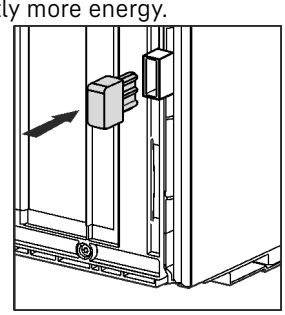

8 Setting up the device

CAUTION

Risk of personal injury!

- ▶ Have two people move this appliance into place.

CAUTION

Risk of injury and damage!

The door can strike against the wall, which would damage it. In the case of glass doors, the broken glass may cause injury!

- ▶ Protect the door from striking against the wall. Place a door stopper, e.g. a felt stopper, on the wall.
- ▶ A device that limits door opening to 90° can be ordered from a qualified service provider.

WARNING

Unstable appliance!

Risk of injury and damage. The appliance can tip over.

- ▶ Secure the appliance according to the operating instructions.

WARNING

Danger of fire and damage!

- ▶ Do not place devices that give off heat, e.g. microwaves, toasters, etc. on the appliance.

Make sure that the following requirements are fulfilled:

- ❑ Only move the appliance when it is not loaded.
- ❑ Only set up the appliance when someone is present to help you.

9 Setting up the appliance level

CAUTION

Risk of injury or damage from the appliance tipping or the door falling open!

If the additional adjustable foot on the base support is not correctly positioned on the floor, there is a risk of the door falling open or the appliance tipping. This can lead to injury or property damage.

- ▶ Unscrew the additional adjustable foot on the support until it reaches the floor.
- ▶ Then turn it another 90°.

- ▶ Align the appliance so that it stands firmly and by applying the accompanying spanner to the adjustable height feet (A) and using a spirit level.
- ▶ Then prop up the door: Lower the adjustable foot on the bearing bracket (B) until it contacts the floor, then turn it an additional 90°.

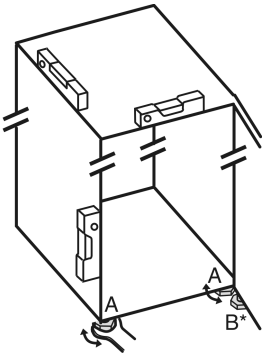

- ▶ Then prop up the door: Screw out the adjustable foot on the bearing bracket (B) using the open-ended wrench SW10 until it comes into contact with the floor, then turn an additional 90°.

10 After setup

- ▶ Pull off the protective film from the outside of the housing.
- ▶ Pull off the protective film from the trim strips.
- ▶ Pull off the protective film from the trim strips and drawer fronts.
- ▶ Pull off the protective film from the stainless steel rear panel.
- ▶ Remove all transport packaging.
- ▶ Clean the appliance .
- ▶ Make a note of type (model, number), appliance designation, appliance/serial no., date of purchase, and dealer address in the designated fields .

11 Disposal of packaging

WARNING

Danger of suffocation from packaging materials and films!

- ▶ Do not allow children to play with packaging materials.

The packaging is made from recyclable materials:

- Corrugated card/cardboard

- Parts made of foamed polystyrene
- Films and bags from polyethylene
- Packing bands from polypropylene
- Wood frame nailed together with a polyethylene window*

▶ Take the packaging material to an official collection point.

12 Explanatory symbols used

	There is the risk of injury when doing this! Obey the safety instructions!
	These instructions apply to several models. Only perform this step if it applies to your appliance.
	To install, please follow the detailed description in the Guide.
	This section applies either to a single-door appliance or a double-door appliance.
	Choose one of the options: Appliance with right-hinged door or appliance with left-hinged door.
	Installation step necessary with IceMaker and/or InfinitySpring.
	Loosen or tighten screws slightly.
	Tighten the screws fully.
	Check to see if the next step applies for your model.
	Check the components are in correctly.
	Measure the specified measurement and adjust if necessary.
	Installation tool: Meter stick
TORX® 20	Tool for assembly: Cordless screwdriver and attachments
	Tool for assembly: Spirit level
SW7 SW10	Tool for assembly: Size 7 and size 10 spanner
	Two people are required for this step.
	This step takes place at the selected location of the appliance.
	Aid for assembly: String
	Aid for assembly: Square
	Aid for assembly: Screwdriver
	Aid for assembly: Scissors
	Aid for assembly: Non-permanent marker pen
	Accessory kit: Remove components
	Dispose of components that are no longer needed.

13 **** freezer compartment door*

It is very easy to reposition the hinge of the **** freezer compartment door if the main door hinge is swapped. If the main door of the appliance can be opened to more than 115° (1), you can open the freezer compartment without repositioning the hinge. If the opening angle (2) of the appliance door is less than this, the hinge must be repositioned.

* Depending on model and options

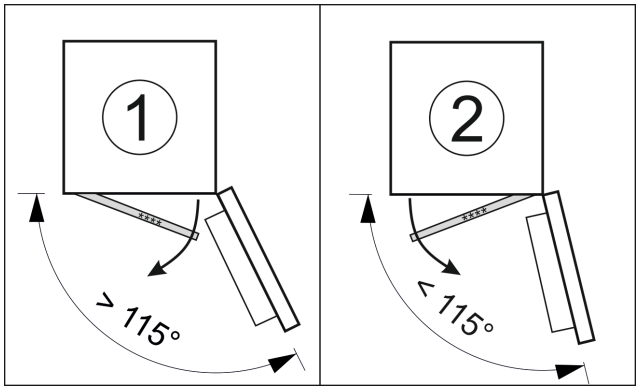

Fig. 4

13.1 Moving the door hinge

The slider for moving the door hinge is located on the back of the **** freezer compartment door at the bottom.

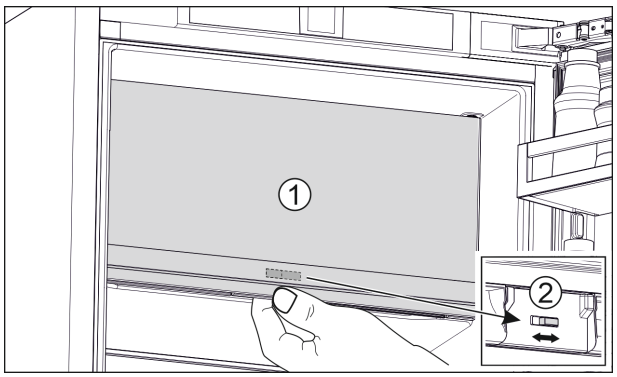

Fig. 5

▶ Close the **** freezer compartment door (1).
▶ Grab the **** freezer compartment door from below.
▶ Move the slider (2) either to the right or to the left.

14 Reversing the door

Tools

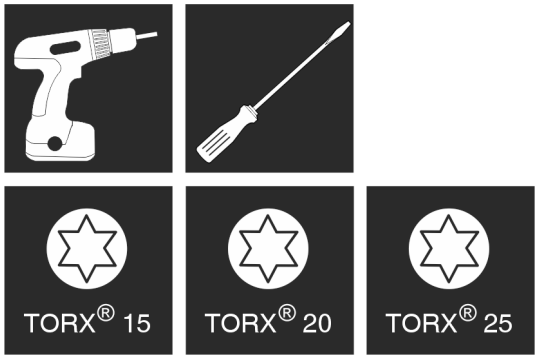

Fig. 6

WARNING
Risk of bodily injury due to the door falling off.
If the bearing parts are not installed with the proper torque, the door may fall off. In addition, the door may not close, thus impairing the cooling performance of the appliance.
▶ Die Lagerböcke/Lagerbolzen fest mit 4 Nm anschrauben.
▶ Check all screws and retighten if necessary.

NOTICE
Risk of damage to side-by-side appliances caused by condensate!*
Certain appliances can be set up as side-by-side combinations (two appliances beside one another).
If your appliance **is a side-by-side appliance**:
▶ Install the SBS combination in accordance with the accompanying sheet.
If the **configuration of appliances is specified**:
▶ Do not change the door stop.

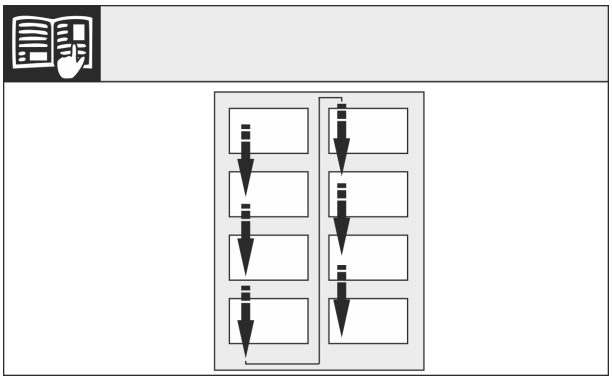

Fig. 7

Observe the reading direction.

14.1 Removing the door

Note
▶ To prevent food items from falling out, take all food out of the door racks before removing the door.

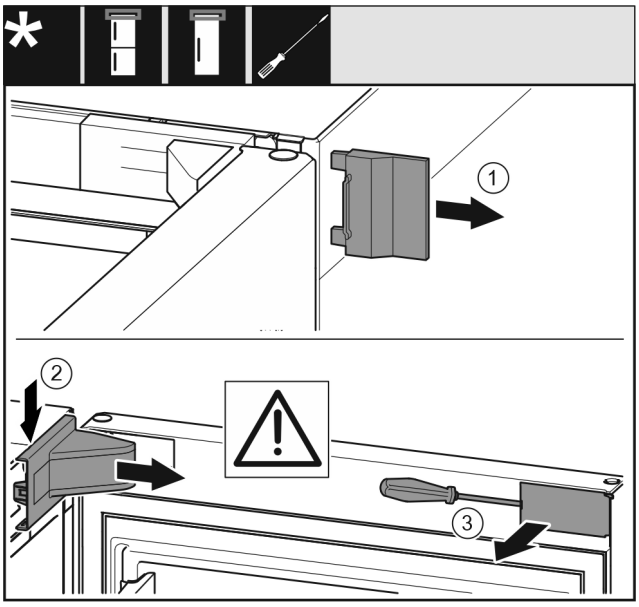

Fig. 8

▶ Open the door.

NOTICE
Risk of damage!
If the door seal is damaged the door may not close properly and the level of cooling is insufficient.
▶ Do not damage the door seal with the screwdriver!

▶ Remove the outer cover. *Fig. 8 (1)*
▶ Disengage and release the bearing bracket cover. Remove the bearing bracket cover. *Fig. 8 (2)*
▶ Unlatch the panel with a slotted screwdriver and swivel it to one side. *Fig. 8 (3)*

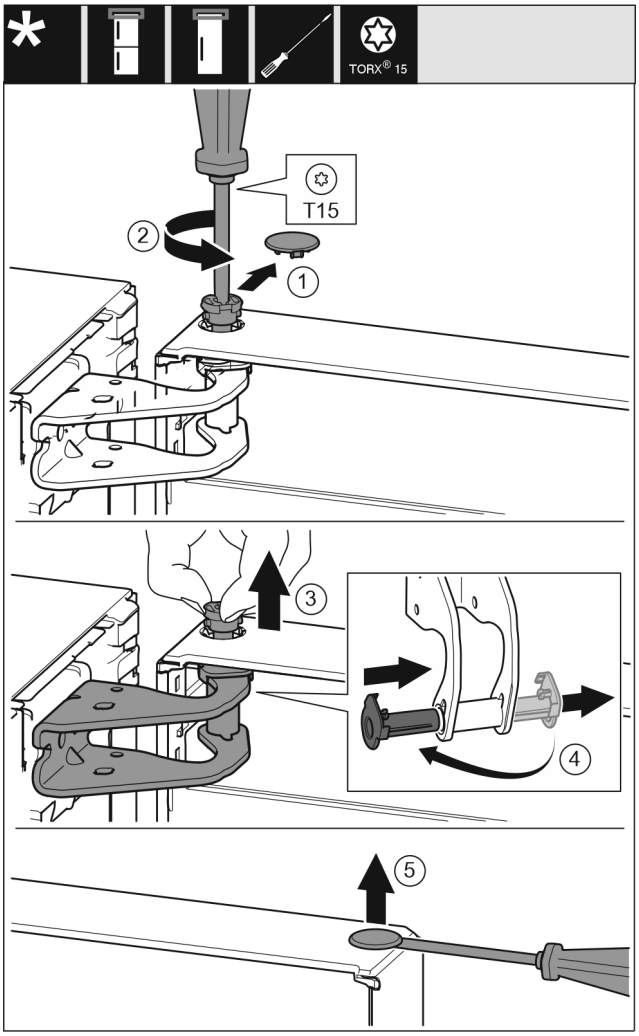

Fig. 9

CAUTION

Risk of injury if the door tips out!

- ▶ Keep a steady grip on the door.
- ▶ Set the door down carefully.

- ▶ Carefully remove the protective cover. *Fig. 9 (1)*
- ▶ Loosen the bolts slightly with a T15 screwdriver. *Fig. 9 (2)*
- ▶ Hold the door and remove the bolts with your fingers. *Fig. 9 (3)*
- ▶ Pull the bearing bush out of the guide. Insert from the other side and latch into place. *Fig. 9 (4)*
- ▶ Lift the door and place it to one side.
- ▶ Carefully lift the plugs out of the door bearing bush with a slotted screwdriver and remove them. *Fig. 9 (5)*

14.2 Reversing the freezer compartment door*

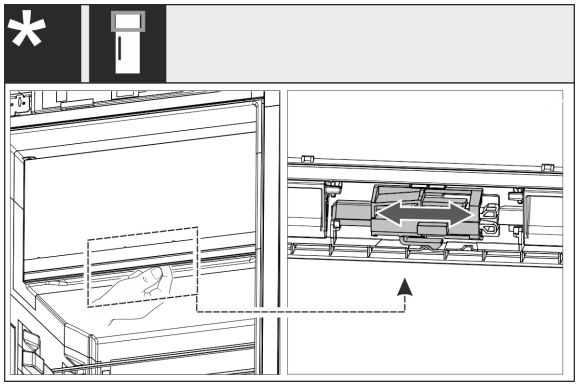

Fig. 10

- ▶ For single-door appliances: Switch the door hinge of the 4-star compartment by shifting the lever. The door of the 4-star compartment must be closed for this to happen. Shift the lever on the back of the door from below.

14.3 Moving the upper bearing parts to the other side

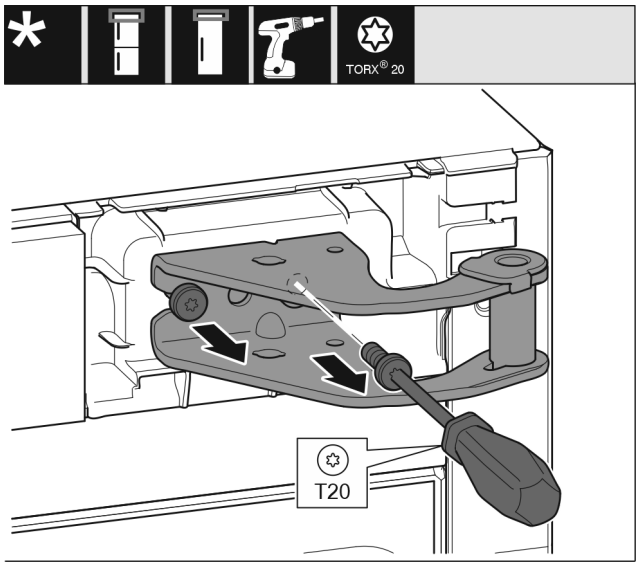

Fig. 11

- ▶ Remove both screws with a T20 screwdriver.
- ▶ Lift and remove the bearing bracket.

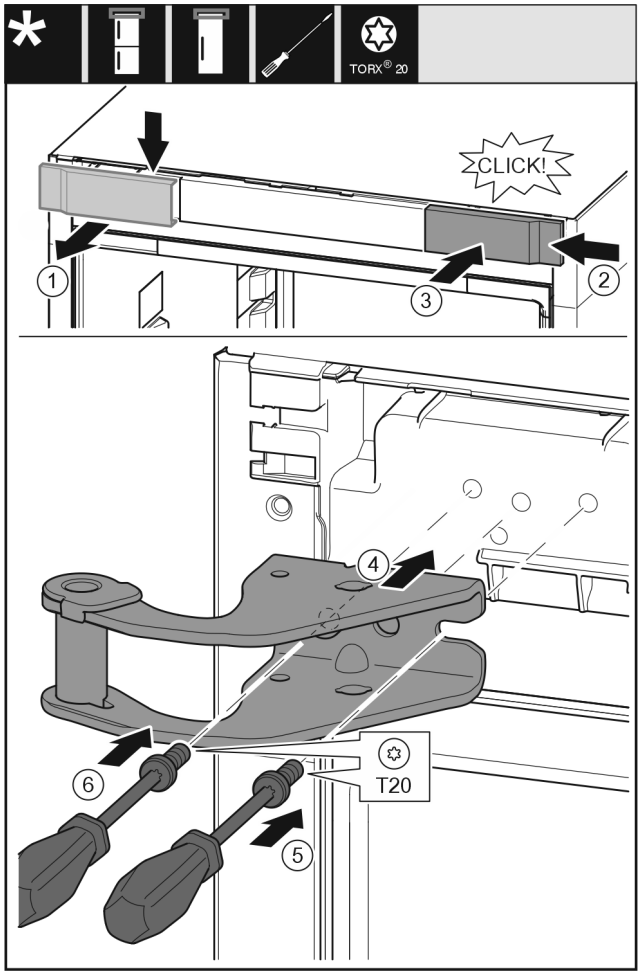

Fig. 12

- ▶ Take off the cover to the front from above. *Fig. 12 (1)*
- ▶ Rotate the cover 180° and clip onto the other side from the right. *Fig. 12 (2)*
- ▶ Latch the cover into place. *Fig. 12 (3)*
- ▶ Position the upper bearing bracket. *Fig. 12 (4)*
- ▶ Insert the screw with a T20 screwdriver and tighten it. *Fig. 12 (5)*
- ▶ Insert the screw with a T20 screwdriver and tighten it. *Fig. 12 (6)*

14.4 Moving the lower bearing parts to the other side

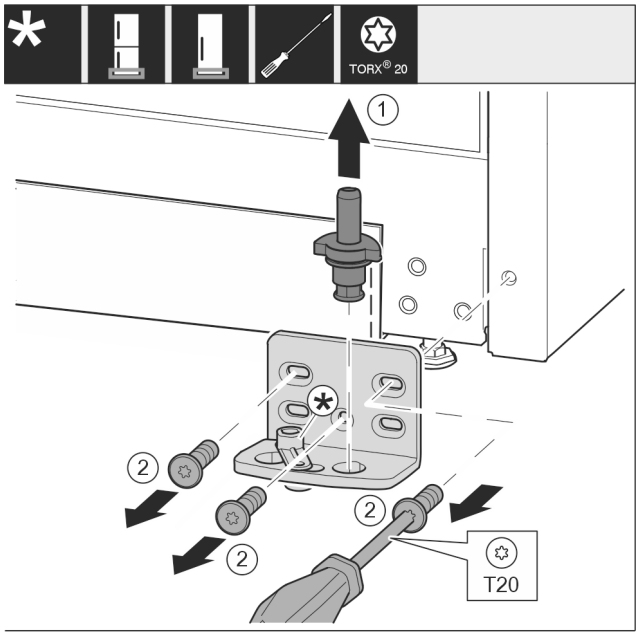

Fig. 13

- ▶ Lift the bearing pin completely upward and remove it. *Fig. 13 (1)*
- ▶ Remove the screws with the T20 screwdriver and take off the bearing bracket. *Fig. 13 (2)*

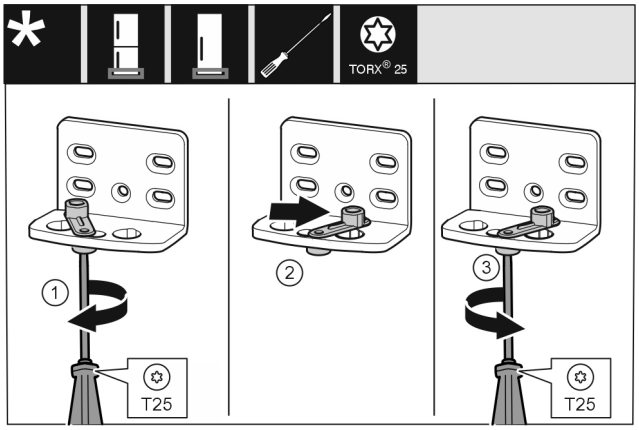

Fig. 14

- ▶ Loosen the screw using a T25 screwdriver. *Fig. 14 (1)*
- ▶ Lift the door closing aid and turn it 90° to the right in the hole. *Fig. 14 (2)*
- ▶ Tighten the screw using the T25 screwdriver. *Fig. 14 (3)*

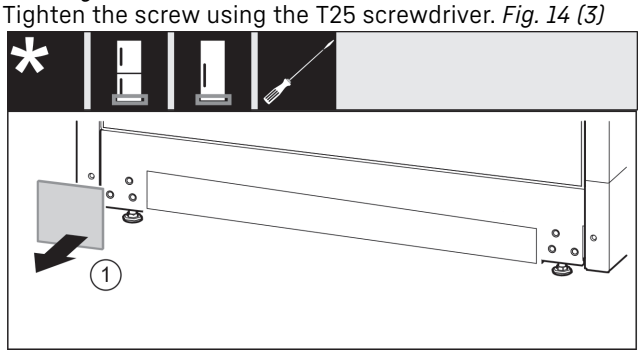

Fig. 15

- ▶ Take off the cover. *Fig. 15 (1)*

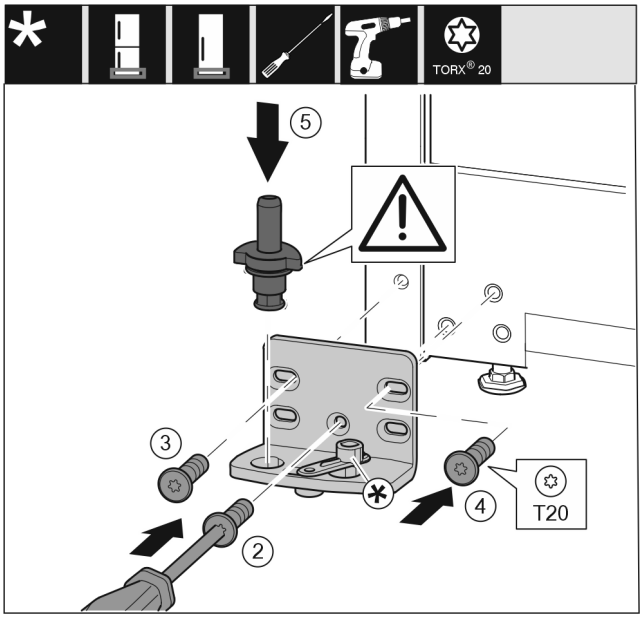

Fig. 16

- ▶ Place the bearing bracket on the other side and screw it in using the T20 screwdriver. Start with screw 2 at the bottom in the middle. *Fig. 16 (2)*
- ▶ Screw in screws 3 and 4. *Fig. 16 (3,4)*
- ▶ Insert the bearing pin completely. Make sure that the latching lug is pointing to the rear. *Fig. 16 (5)*

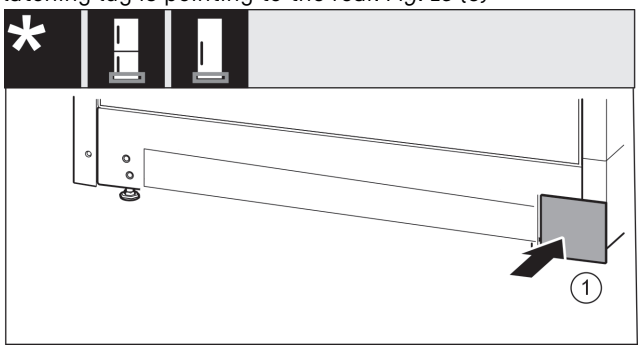

Fig. 17

- ▶ Put back the cover on the other side. *Fig. 17 (1)*

14.5 Moving the door bearing parts to the other side

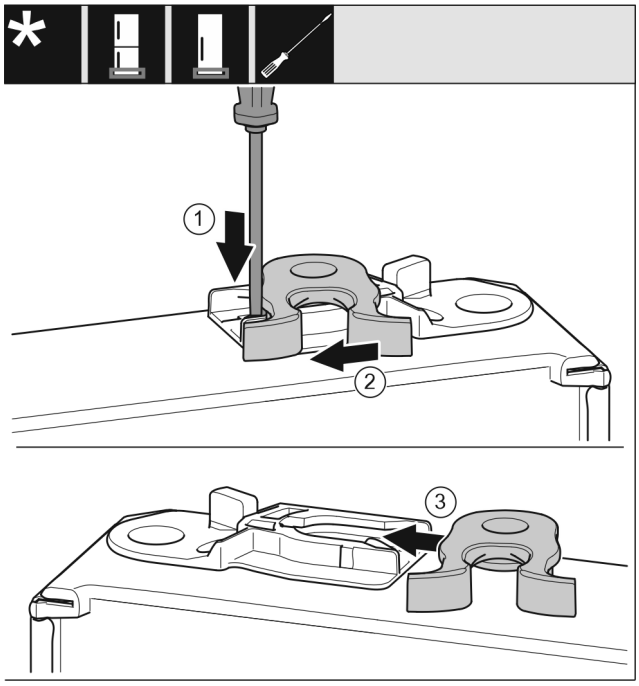

Fig. 18

- ▶ Underside of door faces upwards: Turn the door.
- ▶ Push the lug downward with a slotted screwdriver. *Fig. 18 (1)*
- ▶ Pull the door latch out of the guide. *Fig. 18 (2)*
- ▶ Push the door latch into the guide on the other side. *Fig. 18 (3)*
- ▶ Upper side of door faces upwards: Turn the door.

14.6 Fitting the door

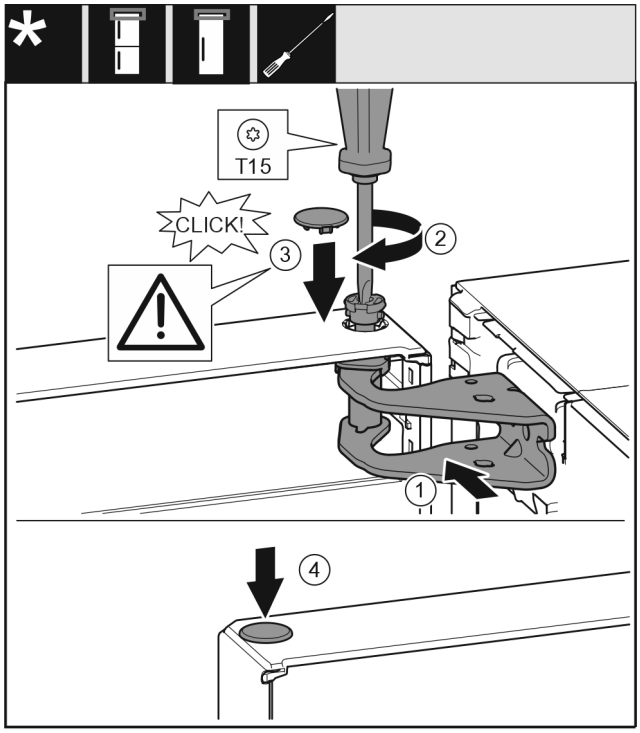

Fig. 19

- ▶ Place the door on the bottom bearing pins.
- ▶ Align the top of the door with opening in the bearing bracket. *Fig. 19 (1)*

*** Depending on model and options**

- ▶ Insert the bolt and tighten with a T15 screwdriver. *Fig. 19 (2)*
- ▶ Fit the protective cover to protect the door: Insert the protective cover and check that it lies flush on the door. If not, insert the bolt fully. *Fig. 19 (3)*
- ▶ Insert the plugs. *Fig. 19 (4)*

14.7 Aligning the door

WARNING
Risk of bodily injury due to the door falling off.
If the bearing parts are not installed with the proper torque, the door may fall off. In addition, the door may not close, thus impairing the cooling performance of the appliance.
- ▶ Die Lagerböcke fest mit 4 Nm anschrauben.
- ▶ Check all screws and retighten if necessary.

- ▶ Align the doors flush with the appliance housing using the two slots in the lower bearing bracket, if needed. To do this undo the middle screw in the bottom bearing bracket with the T20 tool supplied. Undo the remaining screws a little with the T20 tool or with a T20 screwdriver and align via the slots.
- ▶ Prop up the door: Screw out the adjustable foot on the bearing bracket using the open-ended wrench SW10 until it comes into contact with the floor, then turn an additional 90°.

14.8 Fitting the covers

For appliances without soft stop mechanism:

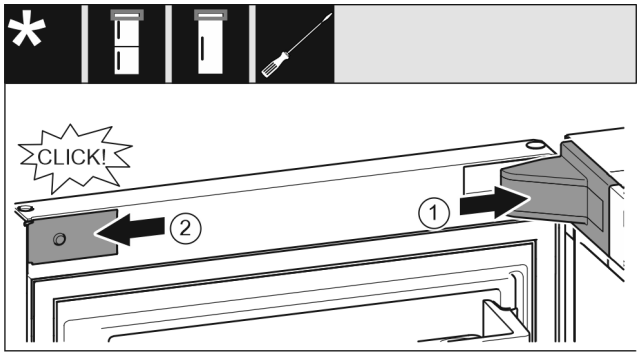

Fig. 20
The door is open 90°.
- ▶ Position the bearing bracket cover and engage it. If necessary push it apart carefully. *Fig. 20 (1)*
- ▶ Position the panel on the side and latch into place. *Fig. 20 (2)*

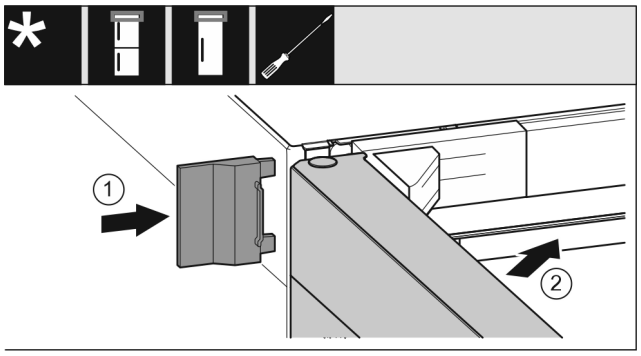

Fig. 21
- ▶ Slide on the outer cover. *Fig. 21 (1)*
- ▶ Close the upper door. *Fig. 21 (2)*

15 Connecting the appliance

WARNING
Incorrect connection!
Risk of fire.
- ▶ Do not use an extension cord.
- ▶ Do not use a multipoint connector strip.

NOTICE
Incorrect connection!
Damage to the electronics.
- ▶ Do not connect the appliance to a stand-alone inverter, e.g. solar power systems and petrol generators.
- ▶ Do not use an energy saving plug.

Note
Only use the mains cable supplied.
- ▶ A longer mains cable can be ordered from Customer Service.

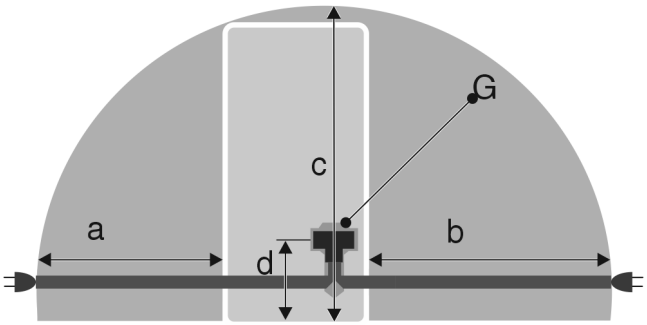

*Fig. 22 **

For 600 mm wide appliances:

a*	b*	c*	d*	G*
~ 1350 mm	~ 1800 mm	~ 2050 mm	~ 150 mm	Appliance plug

Make sure that the following requirements are fulfilled:
- The type of current and voltage at the installation site complies with the information on the serial tag .
- The socket is grounded and fused in accordance with regulations.
- The tripping current for the fuse is between 10 and 16 A.
- The socket is easily accessible.
- The socket is not located behind the appliance but in areas a or b *(a, b, c)*.
- ▶ Check the electrical connection.
- ▶ Insert the appliance plug *(G)* on the rear side of the appliance. Ensure that they latch into place correctly.
- ▶ Connect the mains plug to the power supply.
- ▷ The Liebherr logo appears on the screen.
- ▷ The display switches to the standby symbol.

home.liebherr.com/fridge-manuals

EN Refrigerator

Issue date: 20221006

Part number index: 7080444-01

Liebherr-Hausgeräte Marica EOOD
Bezirk Plovdiv
4202 Radinovo
Bulgarien

Installation Guide

Quality, Design and Innovation

home.liebherr.com/fridge-manuals

LIEBHERR

Contents

1 General safety instructions..... 2

2 Installation dimensions..... 3

3 Transporting the appliance..... 4

3.1 Transporting the appliance for initial use..... 4

3.2 Transporting the appliance after initial use..... 4

4 Installing multiple appliances..... 4

5 Side by side assembly..... 4

6 After setting up..... 8

The manufacturer is continually working on the further development of all types and models. Please be aware that we reserve the right to make changes to the shape, equipment and technology.

Symbol	Explanation
	Read instructions Please read the information in these instructions carefully to understand all of the benefits of your new appliance.
	Additional information on the Internet The digital manual with additional information and in other languages can be found via the QR code on the front of the manual or by entering the service number at **home.liebherr.com/fridge-manuals**. The service number can be found on the serial tag: 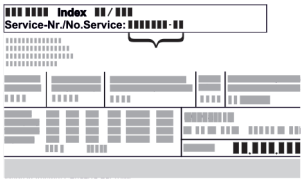 *Fig.* Example illustration
	Check appliance Check all parts for transport damage. If you have any complaints, please contact your agent or customer service.
	Differences These instructions apply to a range of models, so differences are possible. Sections that apply to certain models only are marked with an asterisk (*).
	Instructions and results Instructions are marked with a ▶. Results are marked with a ▷.
	Videos Videos about the appliances are available on the YouTube channels of Liebherr-Hausgeräte.

Open source licences:

The appliance contains software components that use open source licences. Information on the open source licences used can be found here: **home.liebherr.com/open-source-licences**

1 General safety instructions

- Please keep this assembly manual in a safe place so you can refer back to it at any time.
- If you pass the appliance on, please hand this assembly manual to the next user.
- Read this assembly manual carefully before installation and use to ensure safe and correct use of the appliance. Follow the instructions, safety instructions and warning messages included at all times. They are important for ensuring you can operate and install the appliance safely and without any problems.
- First read the general safety instructions in the "General safety instructions" section of the **operating instructions**, which accompany these installation instructions, and follow them. If you cannot find the **operating instructions**, you can download the **operating instructions** from the internet by entering the service number at **home.liebherr.com/fridge-manuals**. The service number can be found on the serial tag:

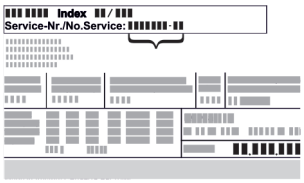

- **Observe the warning messages and other detailed information in the other sections when installing the appliance:**

	DANGER	identifies a situation involving direct danger which, if not obviated, may result in death or severe bodily injury.
	WARNING	identifies a dangerous situation which, if not obviated, may result in death or severe bodily injury.
	CAUTION	identifies a dangerous situation which, if not obviated, may result in minor or medium bodily injury.
	NOTICE	identifies a dangerous situation which, if not obviated, may result in damage to property.
	Note	identifies useful instructions and tips.

* Depending on model and options

2 Installation dimensions

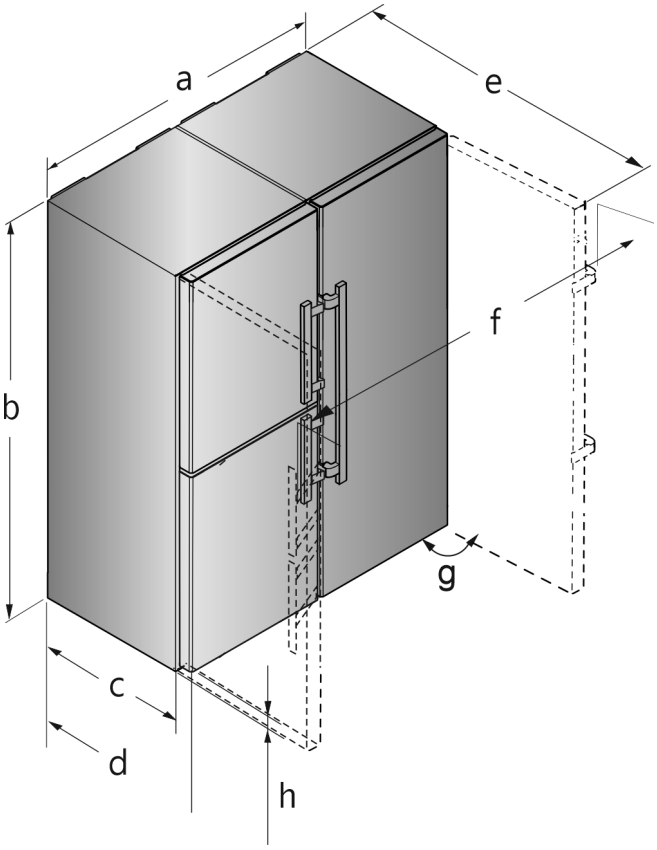

*Fig. 1 Example illustration**

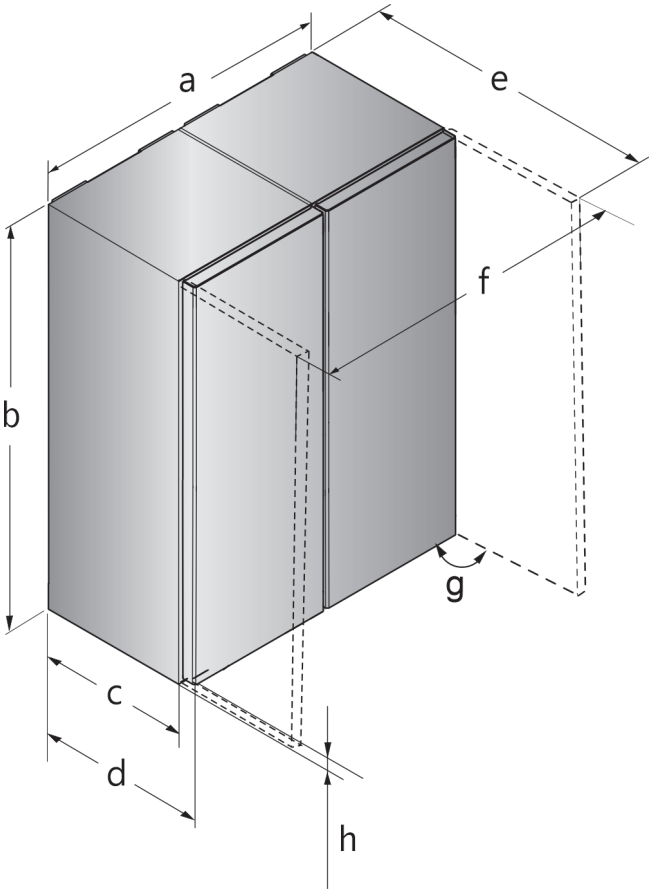

*Fig. 2 Example illustration**

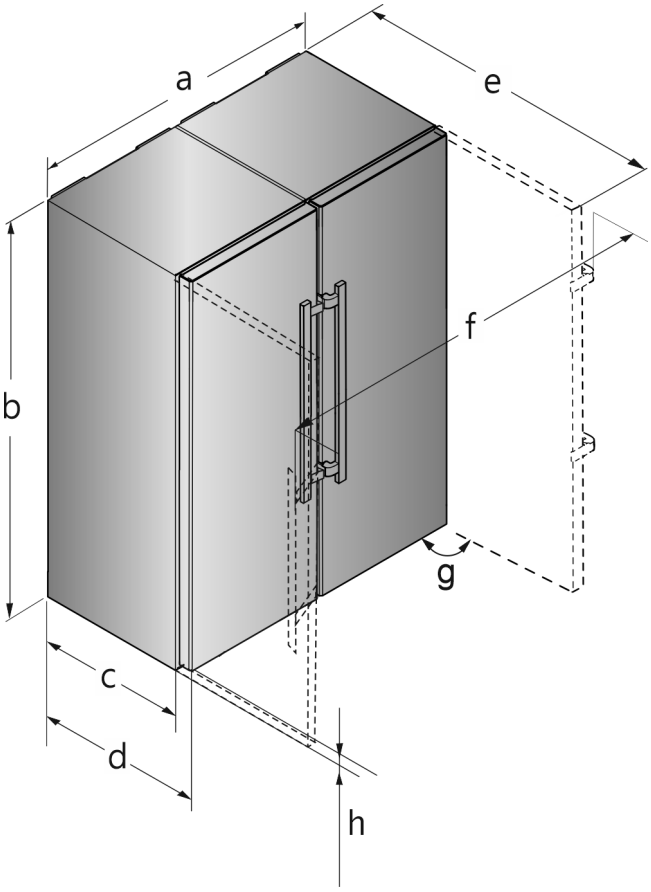

*Fig. 3 Example illustration**

XCC.. 52.. / XRC.. 52.. / XRF.. 52.. *	
a (mm)	1204
b (mm)	1855
c (mm)[x]	600
d (mm)[x]	675
e (mm)[x]	1222
f (mm)	1318
g	90°
h (mm)	35

Dimensions with lever handle

XRF.. 52.. *	
a (mm)	1226
b (mm)	1855
c (mm)[x]	600
d (mm)[x]	675
e (mm)[x]	1217
f (mm)	1252
g	90°
h (mm)	35

Devices with a recessed grip

x

e These dimensions apply for an opening angle of 90°.
f Spacing angles will vary according to the opening angle.

3 Transporting the appliance

3.1 Transporting the appliance for initial use

Ensure that the following requirements are met:

- ❑ The appliance is packaged.
- ❑ The appliance is upright.

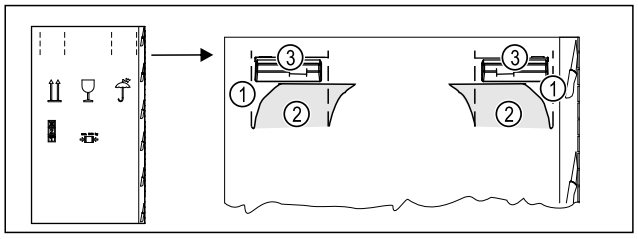

Fig. 4

- ▶ Press the packaging cardboard into the perforation *Fig. 4 (1)* at the top.
- ▶ Pull out any tabs *Fig. 4 (2)* that have been pushed in.
- ▷ Carrying handle *Fig. 4 (3)* visible on the right and left.
- ▶ Hold the appliance by the carrying handles *Fig. 4 (3)*.
- ▶ Transport the appliance with the help of two people.
- ▶ Unpacking the appliance.

3.2 Transporting the appliance after initial use

Observe the following instructions if you wish to transport or move the appliance again after initial use.

Ensure that the following requirements are met:

- ❑ The appliance is emptied.
- ❑ The appliance is upright.
- ❑ Appliance with door(s): Door is secured against accidental opening.
- ❑ Appliance with telescopic unit: The telescopic unit is secured against accidental opening.
- ❑ Appliance with adjustable feet: Adjustable feet are screwed in.

- ▶ Hold the appliance by the carrying handles.
- ▶ Transport the appliance with the help of two people.

After transport:

- ▶ Unscrew the adjustable feet on the appliance.
- ▶ Align the appliance.

4 Installing multiple appliances

The appliances have been developed for different installation methods. If you wish to install several appliances next to each other or on top of each other, ensure that the following requirements are met:

- ❑ Only install appliances next to or on top of each other if they have been developed for this.
- ❑ Observe notices and the following table.

NOTICE
Risk of damage due to condensate!
- ▶ Do not place the appliance directly next to another cooling/refrigeration unit.

Model	Installation method
All models	Standalone
Models with a model designation starting with **S...**.	Side-by-Side (SBS)
Models without side wall heating	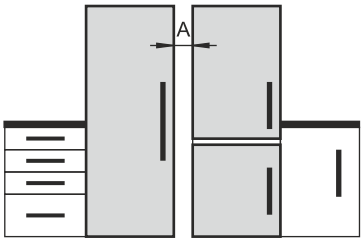 **Next to each other:** Install with gap **A** of 70 mm between the appliances. **Next to each other:** Install with gap **A** of 100 mm between the appliances. If you do not comply with this gap, condensation will form on the side walls between the appliances. 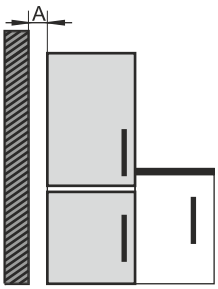 **On an exterior wall:** Install with gap **A** as with installation next to each other. If you do not comply with this gap, condensation may form on the appliance's side wall.

Models and their installation method

Assemble the appliances according to the separate installation instructions.

5 Side by side assembly

NOTICE
Risk of damage due to door collision!
Damage to the appliances with Side-by-Side positioning. If you set up two appliances next to each other in a specific Side-by-Sidearrangement, the door hinge of both appliances is preset at the factory.
- ▶ Side-by-Side positioning: Do not change the door hinge.

Set up the freezer or the appliance with the freezer compartment from the left when viewed from the front. These appliances are equipped with a side-wall heater on the right hand side to prevent condensation forming.

All the assembly components are supplied with the appliance.

Assembly parts in the accessory kit

For appliances with lever handle*

*** Depending on model and options**

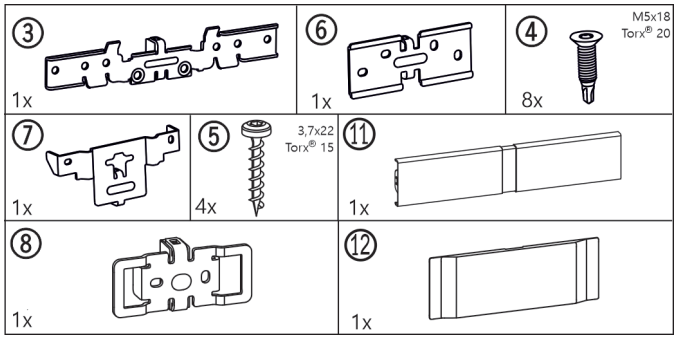

*Fig. 5 **

For appliances with recessed grip*

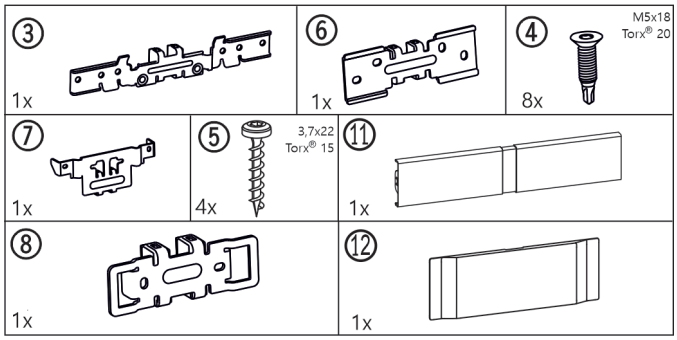

*Fig. 6 **

For all appliances

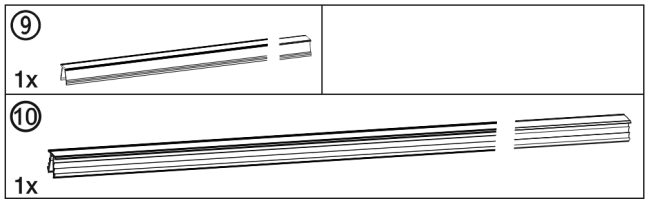

Fig. 7

For appliances with bottom soft stop mechanism*

Base trims*

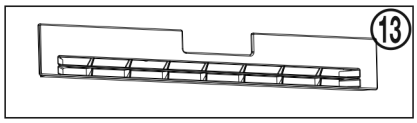

*Fig. 8 **

For appliances without bottom soft stop mechanism*

Base trims*

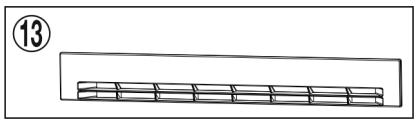

*Fig. 9 **

Tool for assembly

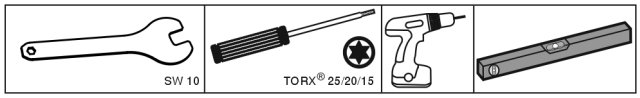

Fig. 10

Ensure that the following tools are to hand:

- ❑ Size 10 open-ended spanner (supplied)
- ❑ Torx® 25/20/15 screwdriver
- ❑ Cordless screwdriver
- ❑ Spirit level

Information on moving the SBS combination:

- ❑ Set up the appliances as close to the final position as possible before assembly.
  The appliances must be accessible on all sides for correct assembly.
- ❑ When moving the appliances after assembly, always take hold from the front outer corners. Never press your knee against the side walls or door.
- ❑ The SBS combination can be moved most easily when moved diagonally, that is by alternately pushing from the left and right corners.
  If the combination is standing directly in front of the recess, push it in straight.

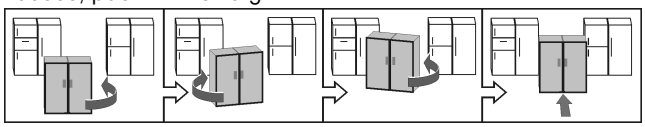

- ❑ If the combination has to be pulled out of the recess again, take hold of the bottom third of the combination and pull forward straight.

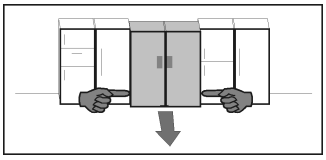

NOTICE

Risk of damage when moving the combined SBS appliance!
The combined SBS appliance is heavy once assembled. The appliance may be dented by improper movement.

▶ Observe the information given on moving the appliance (see above).

▶ Take off all protective film from the exterior of the appliance.

Bottom front of the appliance:

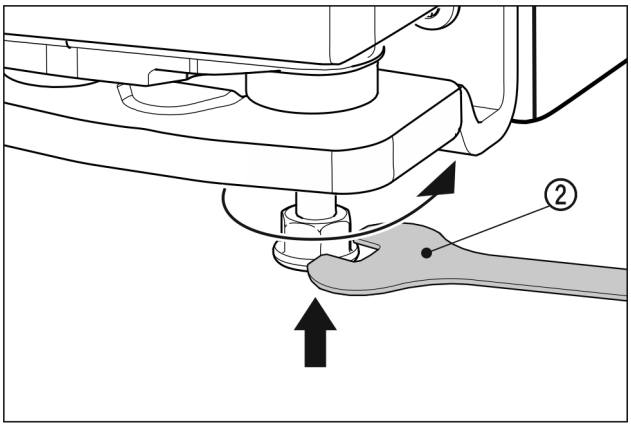

Fig. 11

▶ Tighten the outer adjusting feet. The appliances can be moved easier.

For appliances with lever handle*

▶ Push both appliances so that they are approx. 10 mm apart from each other, and they are positioned flush facing forwards.*

For appliances with recessed grip*

▶ Push both appliances so that they are approx. 32 mm apart from each other, and they are positioned flush facing forwards.*

▶ Straighten the appliances up using a spirit level on the top of the appliance.

Top front of the appliance:

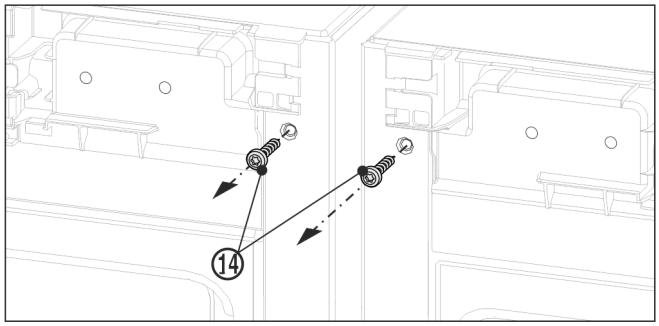

Fig. 12

- ▶ Remove the existing covers.
- ▶ Before fitting the top bracket remove both earthing screws *Fig. 12 (14)*.
- ▶ Store the earthing screws safely. The screws will be necessary for fitting the bracket as shown below.

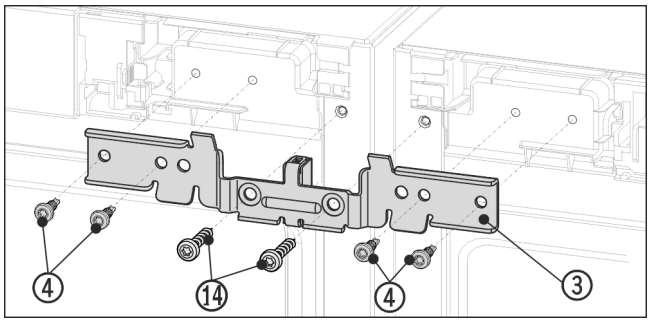

Fig. 13 Example illustration

- ▶ Slide the bracket *Fig. 13 (3)* onto the pins with the spacer between the appliances. Loosely screw in the brackets alternately right and left with four screws *Fig. 13 (4)* and the previously removed earthing screws *Fig. 13 (14)*.
- ▶ If necessary: Check the appliance is stood straight by laying a spirit level on the top of the appliance.

Bottom front of the appliance:

- ▶ Remove the existing covers.

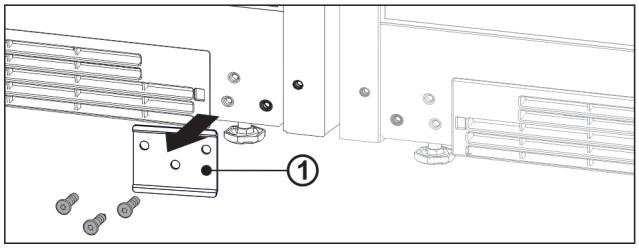

Fig. 14

- ▶ If the metal plate *Fig. 14 (1)* is installed, unscrew the metal plate.

Note
If you want to transport the appliance or set it up as an individual appliance, you must re-attach the metal plate.

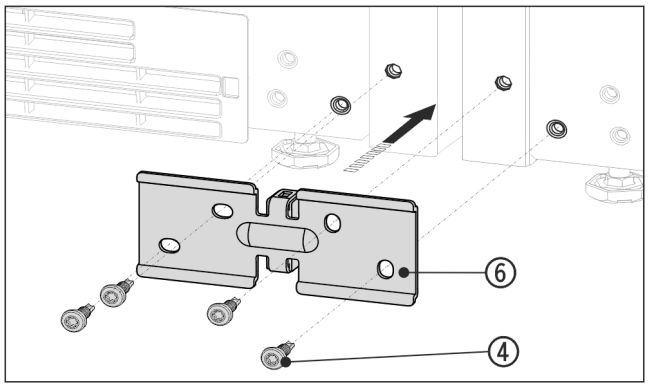

Fig. 15 Example illustration

- ▶ Slide the bracket *Fig. 15 (6)* on with the spacer between the appliances and screw in loosely with the 4 screws *Fig. 15 (4)*.
- ▶ If necessary: Set up the appliances so that they are level.
- ▶ Tighten the screws firmly at the top and bottom.

Top rear of the appliance:

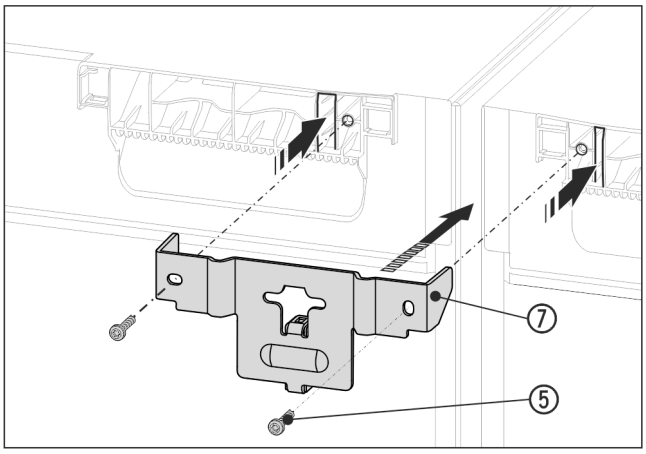

Fig. 16 Example illustration

- ▶ Slide the bracket *Fig. 16 (7)* onto the appliance ceiling with the lugs and with the spacer between the appliances. Screw in firmly with 2 screws *Fig. 16 (5)*.

Bottom rear of the appliance:

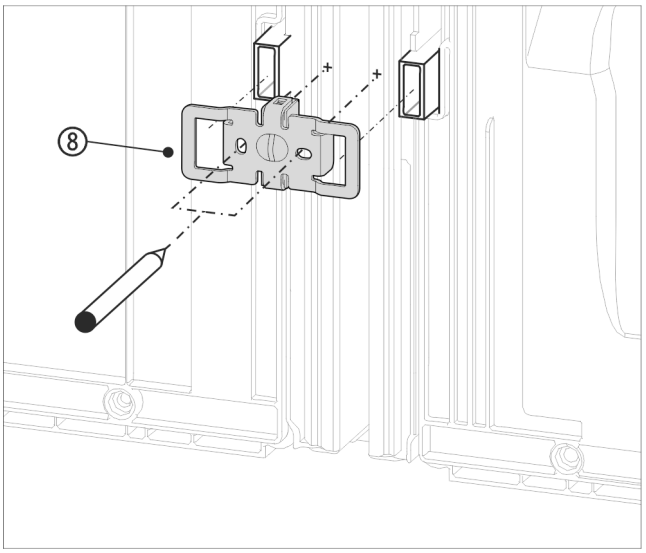

Fig. 17 Example illustration

- ▶ Slide the bracket *Fig. 17 (8)* on with the slots over the retainer for the wall spacers.

Note
Holes for the screws must be pre-drilled.

- ▶ Mark the position of the holes to be drilled with a pencil.
- ▶ Remove the bracket again.

Note
Only drill through the metal plate. Drill depth approx. 1 mm.

*** Depending on model and options**

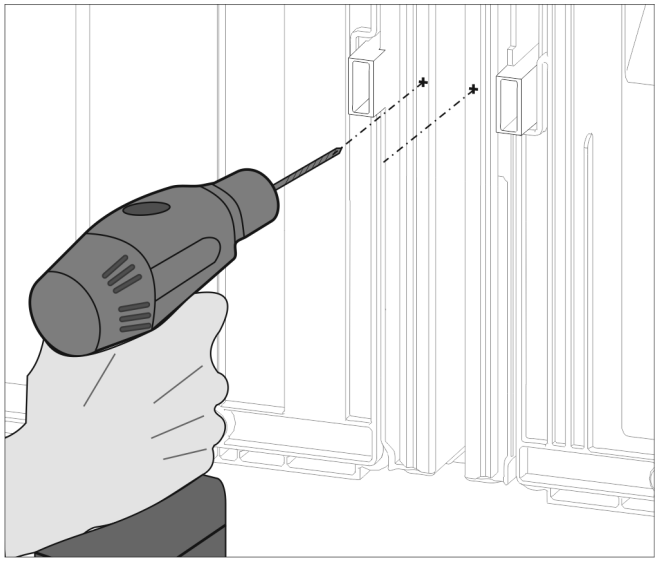

Fig. 18

▶ Pre-drill the screw holes with a 3 mm bit and deburr.

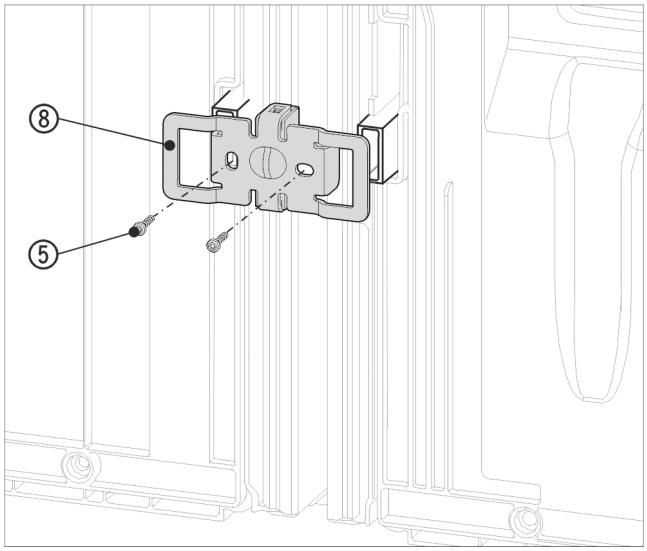

Fig. 19 Example illustration

▶ Slide the bracket *Fig. 19 (8)* on once more with the slots over the retainer for the wall spacers.

▶ Screw in tightly with the 2 screws *Fig. 19 (5)*.

Before fitting the top and front cover strips, push the two bars together over the whole length. The strips can be inserted more easily into the gap. Use a soft cloth to push the strips in to avoid dents in the surface of the cover strips. Press the strips into the gap carefully and evenly in order to achieve an optimum bond.

For appliances with lever handle

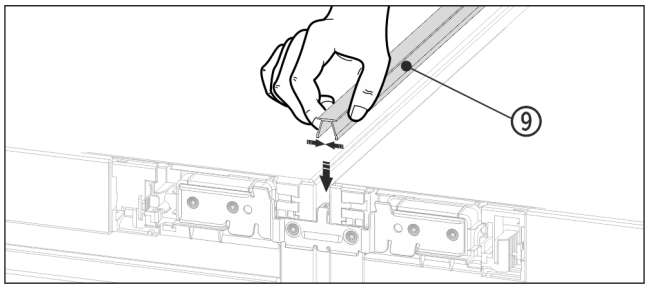

Fig. 20

▶ On the top press the short cover strip *Fig. 20 (9)* into the horizontal gap.

For appliances with recessed grip*

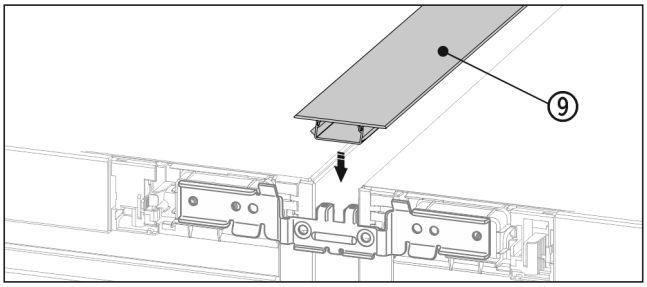

*Fig. 21 **

▶ On the top press the short cover strip *Fig. 21 (9)* into the horizontal gap.*

For appliances with lever handle*

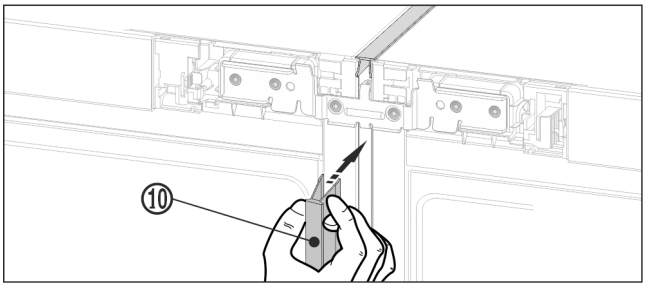

*Fig. 22 **

▶ On the front, press the long cover strip *Fig. 22 (10)* into the vertical gap. Ensure that the strip rests on the connecting plate.*

For appliances with recessed grip*

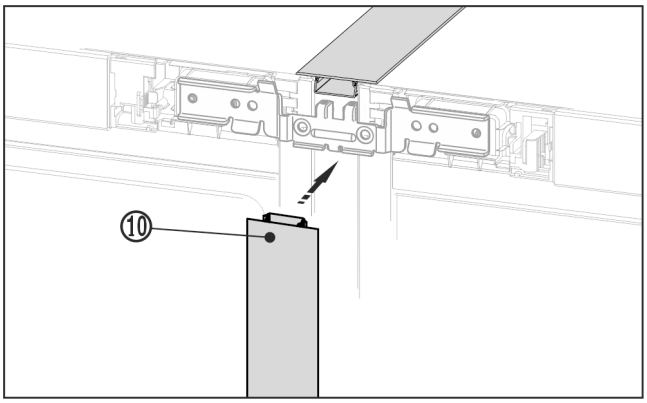

*Fig. 23 **

▶ On the front, press the long cover strip *Fig. 23 (10)* into the vertical gap. Ensure that the strip rests on the connecting plate.*

▶ Take off the protective film from the cover strip.*

Top front of the appliance:

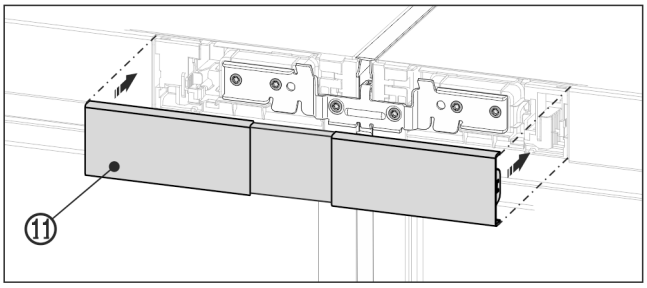

Fig. 24 Example illustration

▶ Snap the top cover *Fig. 24 (11)* onto the still open gap between the two control panel trims. Make sure that the outer sides of the cover form a flush finish with the control panel trims.

Bottom front of the appliance

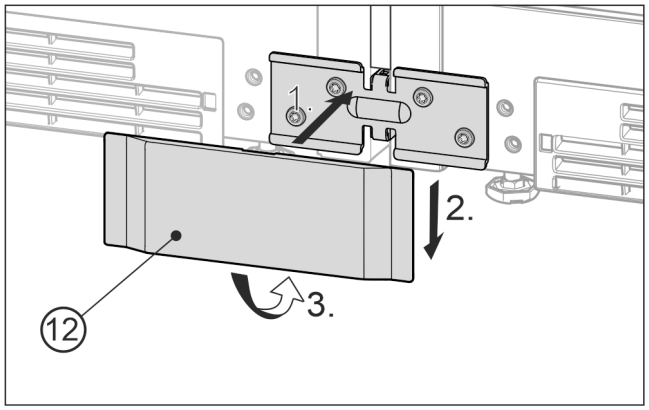

Fig. 25 Example illustration

- ▶ Place the bottom cover *Fig. 25 (12)* onto the bracket from the front *Fig. 25 (1)*, slide it down *Fig. 25 (2)* and snap it in at the bottom *Fig. 25 (3)*.
- ▶ To disassemble the cover, insert a screwdriver at the bottom on the side below the cover and release both lower hooks. The cover can swing out upwards.
- ▶ Connect the combination electrically. See the installation guide.
  Appliances with IceMaker or InfinitySpring:
- ▶ Connect the appliance to the fixed water connection. See the installation guide.

NOTICE
Risk of damage when moving the combined SBS appliance!
The combined SBS appliance is heavy once assembled. The appliance may be dented by improper movement.
- ▶ Observe the information given on moving the appliance (see above).

- ▶ Carefully push the SBS combination into the specified position.
- ▶ If necessary, align the SBS combination using the levelling feet.
- ▶ Then prop up the door: Lower outer adjusting feet on the bearing bracket until they are resting on the floor.

The doors can be straightened at height on the outer lower bearing brackets:
- ▶ Open the door to 90°.

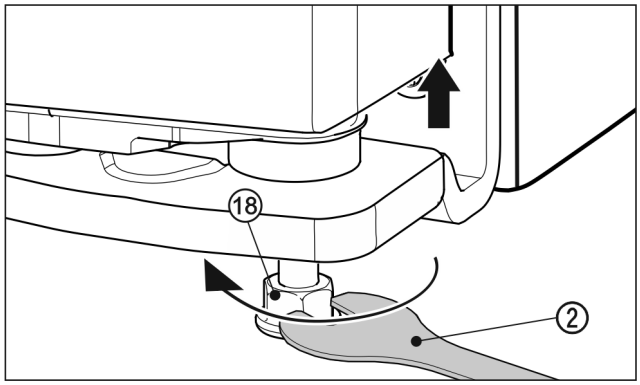

Fig. 26

- ▶ To lift the door, unscrew the adjusting foot *Fig. 26 (18)* clockwise using the supplied open-ended spanner *Fig. 26 (2)* until the foot makes contact with the floor. Then continue turning until the door is adjusted to the right height. When delivered, the bearing pin is completely screwed in.

Fit decorative base trim.*

After you have assembled and straightened out the appliances, the base trims can be fitted at the bottom of the appliances. The base trims are decorative and will not affect the functionality of the appliances.*

For appliances with bottom soft stop mechanism*

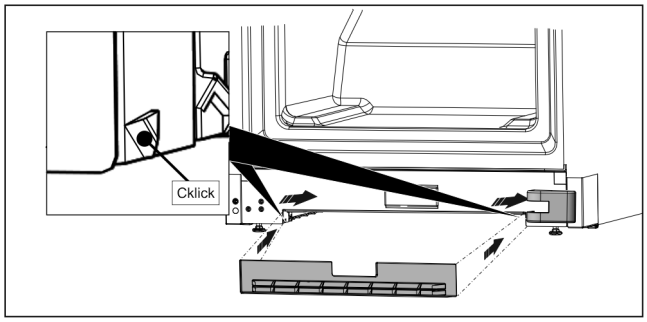

*Fig. 27 **

- ▶ Attach the base trim to the bottom of the appliance in the recess.*

Note
The base trim must be pushed to a little behind the bearing bracket cover.*

For appliances without bottom soft stop mechanism*

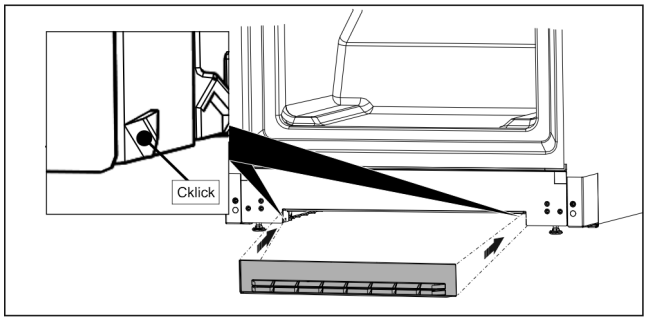

*Fig. 28 **

- ▶ Secure the base trim recess at the bottom of the appliance, as shown in the figure.*

6 After setting up

- ▶ Remove all transport safety fittings from the interior.

NOTICE
Damage to property caused by pointed or sharp objects!
Using pointed or sharp objects when removing packaging material may damage the appliance.
- ▶ Do not use any pointed or sharp objects to remove the packaging material.

- ▶ Remove protective films from the interior: Peel the film off flat along the surface of the component to minimise its adhesive force.
- ▶ Clean the appliance.
- ▶ Note down the type (model, number), appliance name, appliance/serial number, date of purchase and retailer's address.

home.liebherr.com/fridge-manuals

EN Side-by-Side combinations

Issue date: 20260729

Part number index: 7086153-00

Liebherr-Hausgeräte GmbH
Memminger Straße 77-79
88416 Ochsenhausen
Deutschland