Installation Guide

Quality, Design and Innovation

home.liebherr.com/fridge-manuals

LIEBHERR

Contents

1 General safety instructions **2**

2 Installation requirements **3**
2.1 Installation site 3
2.2 Position in space 3
2.3 Integration into a kitchen unit 3

3 Installation dimensions **4**

4 Ventilation requirements **4**

5 Connection dimensions for the power supply **4**

6 Transporting the appliance **5**
6.1 Transporting the appliance for initial use 5
6.2 Transporting the appliance after initial use 5

7 Unpacking the appliance **5**

8 Mounting wall spacers* **5**

9 Setting up the appliance **5**

10 Setting up the appliance so that it is level **6**

11 After setting up **6**

12 Installing multiple appliances **6**

13 Integrating the appliance into a kitchen unit **6**
13.1 Niche dimensions for appliances with recessed handles* 7
13.2 Niche dimensions for appliances with lever handle* 7

14 Disposing of packaging **8**

15 ** freezer compartment door*** **8**
15.1 Moving the door hinge 8

16 Door hinge change **8**
16.1 Empty door racks 8
16.2 Appliances without closing damper: Removing covers 9
16.3 Detaching the door 9
16.4 Reversing the freezer compartment door* 10
16.5 Relocating the upper bearing components 10
16.6 Moving the lower bearing parts to the other side 10
16.7 Moving the door bearing parts to the other side 11
16.8 Moving the handles to the other side* 12
16.9 Fitting the door 13
16.10 Aligning the door 13
16.11 Fitting the covers 13

17 Connecting the appliance to the power supply **14**

The manufacturer is continually working on the further development of all types and models. Please be aware that we reserve the right to make changes to the shape, equipment and technology.

Symbol	Explanation
	Read instructions Please read the information in these instructions carefully to understand all of the benefits of your new appliance.
	Additional information on the Internet The digital manual with additional information and in other languages can be found via the QR code on the front of the manual or by entering the service number at **home.liebherr.com/fridge-manuals**. The service number can be found on the serial tag: 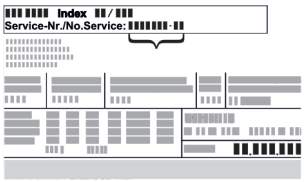 *Fig.* Example illustration
	Check appliance Check all parts for transport damage. If you have any complaints, please contact your agent or customer service.
	Differences These instructions apply to a range of models, so differences are possible. Sections that apply to certain models only are marked with an asterisk (*).
	Instructions and results Instructions are marked with a ▶. Results are marked with a ▷.
	Videos Videos about the appliances are available on the YouTube channels of Liebherr-Hausgeräte.

Open source licences:

The appliance contains software components that use open source licences. Information on the open source licences used can be found here: **home.liebherr.com/open-source-licences**

1 General safety instructions

- Please keep this assembly manual in a safe place so you can refer back to it at any time.
- If you pass the appliance on, please hand this assembly manual to the next user.
- Read this assembly manual carefully before installation and use to ensure safe and correct use of the appliance. Follow the instructions, safety instructions and warning messages included at all times. They are important for ensuring you can operate and install the appliance safely and without any problems.
- First read the general safety instructions in the “General safety instructions” section of the **operating instructions**, which accompany these installation instructions, and follow them. If you cannot find the **operating instructions**, you can download the **operating instructions** from the internet by entering the service number at **home.liebherr.com/fridge-manuals**.

*** Depending on model and options**

The service number can be found on the serial tag:

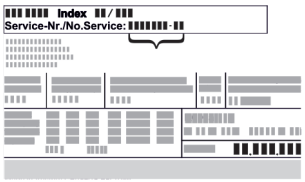

- **Observe the warning messages and other detailed information in the other sections when installing the appliance:**

⚠	DANGER	identifies a situation involving direct danger which, if not obviated, may result in death or severe bodily injury.
⚠	WARNING	identifies a dangerous situation which, if not obviated, may result in death or severe bodily injury.
⚠	CAUTION	identifies a dangerous situation which, if not obviated, may result in minor or medium bodily injury.
	NOTICE	identifies a dangerous situation which, if not obviated, may result in damage to property.
	Note	identifies useful instructions and tips.

2 Installation requirements

The installation conditions are crucial to ensure that you can operate your appliance safely, efficiently and without problems.

- Observe all safety instructions.
- Consider the location and position in the room.

⚠ **WARNING**
Danger of fire due to incorrect positioning!
If the mains cable or plug touches the back of the appliance, the vibration can damage the mains cable or the plug resulting in a short circuit.
▶ Make sure the mains cable is not trapped under the appliance when you position the appliance.
▶ Stand the appliance so that it is not touched by connectors or main cables.
▶ Do not connect any appliances to sockets in the area of the back of the appliance.
▶ Do **not** place and operate multi-sockets/power distributors and other electronic devices (such as halogen transformers) at the back of the appliances.

⚠ **WARNING**
Fire hazard due to dampness!
If live parts or the mains lead become damp this may cause short circuits.
▶ The appliance is designed for use in enclosed areas. Do not operate the appliance outdoors or in areas where it is exposed to splash water or damp conditions.

⚠ **WARNING**
Leaking coolant and oil!
Fire. The coolant contained in the appliance is eco-friendly, but also flammable. The oil contained in the appliance is flammable. Escaping coolant and oil can ignite if the concentration is high enough and in contact with an external heat source.
▶ Do not damage the pipelines of the coolant circuit and the compressor.

2.1 Installation site

- Only set up and use the appliance in enclosed spaces.
- A dry and well-ventilated room is an optimum installation location.
- If the appliance is installed in a very damp environment, condensation may form on the appliance exterior. Always make sure there is good ventilation and aeration at the installation site.
- The more refrigerant there is in the appliance, the larger than room must be in which it is located. In rooms that are too small, a leak can product a flammable gas/air mixture. For every 8 g of refrigerant, the installation room must be at least 1 m^3 in size. Information on the refrigerant contained is given on the type plate inside the appliance.
- The floor on which the appliance stands must be horizontal and level.

2.2 Position in space

- Do not place the appliance in direct sunlight or near radiators or similar sources of heat.
- You can place the appliance directly next to an oven.
- If the appliance is placed directly next to an oven, the energy consumption may increase slightly. This is dependent on the service life and usage intensity of the oven.
- Always position the appliance with the rear directly against the wall, or with wall spacer brackets attached (see below) then with these directly against the wall.*
- Always position the appliance with the rear directly on the wall.*
- Use in hazardous areas is not permitted.

2.3 Integration into a kitchen unit

- You can convert the appliance with kitchen cabinets. (see 13 Integrating the appliance into a kitchen unit)

3 Installation dimensions

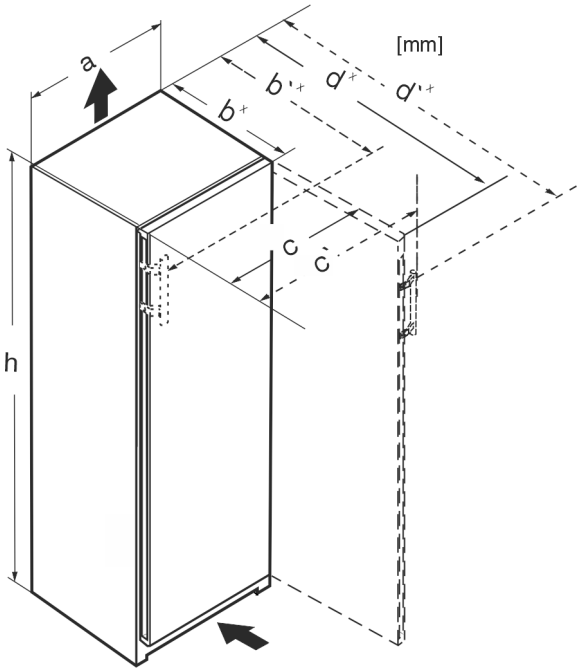

Fig. 1

	h	a	b	b'	c	c'	d	d'
R.. 42..	1255	597	675[x]	–	609	–	1217[x]	–
R... 46..	1455	597	675[x]	–	609	–	1217[x]	–
Kf 46Z00	1455	597	675[x]	–	609	–	1217[x]	–
R... 50..	1655	597	675[x]	–	609	–	1217[x]	–
R(B)... 52..	1855	597	675[x]	–	609	–	1217[x]	–
KB 52Vc20	1855	597	675[x]	–	609	–	1217[x]	–
Ksfe 52Z20	1855	597	675[x]	–	609	–	1217[x]	–
SR(B)... 5220	1855	597	675[x]	–	609	–	1217[x]	–
SR(B)sdh 5220	1855	597	675[x]	719[x]	609	654	1217[x]	1222
SR... 5230	1855	597	675[x]	719[x]	609	654	1215[x]	1222
RD... 52..	1855	597	675[x]	–	609	–	1217[x]	–

[x] For appliances with supplied wall spacers, the dimensions must be increased by 15 mm (see 8 Mounting wall spacers*) .

4 Ventilation requirements

NOTICE
Danger of overheating due to insufficient air ventilation!
The compressor may be damaged if there is insufficient air ventilation.
▶ Take care to ensure adequate air ventilation.
▶ Observe the ventilation requirements.

If the appliance is integrated into a kitchen unit, the following ventilation requirements must be observed:

- As a general rule: the larger the ventilation cross section, the more energy the appliance will be able to save.

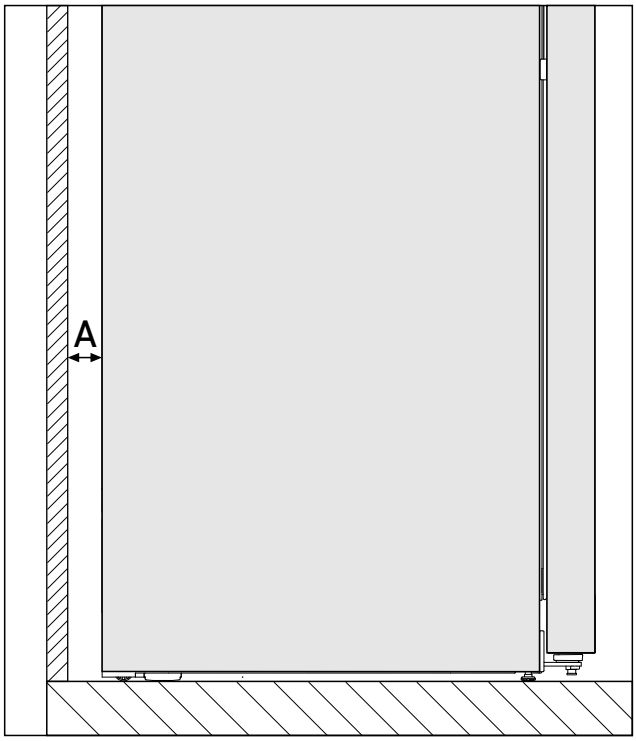

*Fig. 2 **

Wall gap A
25 mm

The energy consumption has been determined with a gap of *Fig. 2 (A)* between the rear of the appliance and the wall.
If the wall gap is less than *Fig. 2 (A)*, this does not affect the appliance's operability but the energy consumption does increase slightly at a smaller wall gap.

5 Connection dimensions for the power supply

The connection to the power supply is on the rear of the appliance. To connect your appliance safely, ensure that the following requirements are met:

- ❑ Dimensions for the connection to the power supply are known and are adhered to. See table below.
- ❑ Connection to the power supply according to the instructions. (see 17 Connecting the appliance to the power supply)

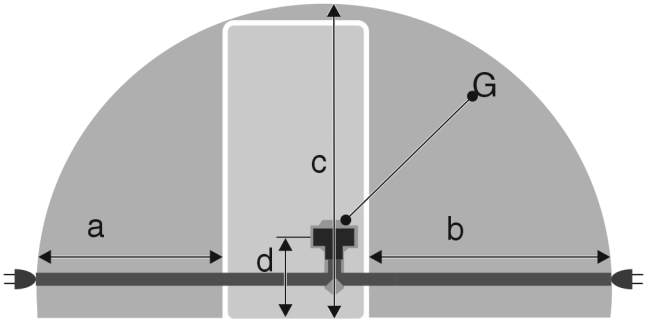

Fig. 3 Refrigerators

(a) Maximum available length of the mains connection cable
(b) Maximum available length of the mains connection cable
(d) Gap between appliance plug and floor
(G) Appliance plug

*** Depending on model and options**

(c) Maximum available vertical length of the mains connection cable

For 600 mm wide appliances:	
a	~ 1350 mm
b	~ 1800 mm
c	~ 2050 mm
d	~ 150 mm

6 Transporting the appliance

6.1 Transporting the appliance for initial use

Ensure that the following requirements are met:

- ❑ The appliance is packaged.
- ❑ The appliance is upright.

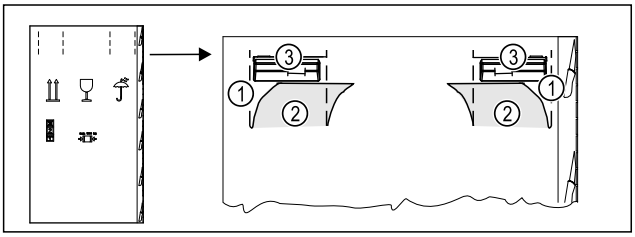

Fig. 4

- ▶ Press the packaging cardboard into the perforation *Fig. 4 (1)* at the top.
- ▶ Pull out any tabs *Fig. 4 (2)* that have been pushed in.
- ▷ Carrying handle *Fig. 4 (3)* visible on the right and left.
- ▶ Hold the appliance by the carrying handles *Fig. 4 (3)*.
- ▶ Transport the appliance with the help of two people.
- ▶ Unpacking the appliance. (see 7 Unpacking the appliance)

6.2 Transporting the appliance after initial use

Observe the following instructions if you wish to transport or move the appliance again after initial use.

Ensure that the following requirements are met:

- ❑ The appliance is emptied.
- ❑ The appliance is upright.
- ❑ Appliance with door(s): Door is secured against accidental opening.
- ❑ Appliance with telescopic unit: The telescopic unit is secured against accidental opening.
- ❑ Appliance with adjustable feet: Adjustable feet are screwed in.

- ▶ Hold the appliance by the carrying handles.
- ▶ Transport the appliance with the help of two people.

After transport:

- ▶ Unscrew the adjustable feet on the appliance.
- ▶ Align the appliance. (see 10 Setting up the appliance so that it is level)

7 Unpacking the appliance

Before you connect the appliance, report any damage immediately to the delivery company.

- ▶ Check the appliance and the packaging for damage during transport. Contact the supplier immediately if you suspect any level of damage.
- ▶ Remove all materials from the back or the side walls of the appliance that may prevent proper installation or ventilation.
- ▶ Remove all protective films from the appliance. Do not use sharp or pointed objects for this.
- ▶ Take the power cable from the rear of the appliance. Remove the cable brackets when you do this, otherwise there will be noise caused by vibrations!

8 Mounting wall spacers*

With wall spacers, your device achieves the declared energy consumption and no condensation forms in high ambient humidity. The device is fully functional without the spacer brackets, but its energy consumption will be slightly higher.

If you insert the wall spacers, then the device depth increases by approx. 15 mm.*

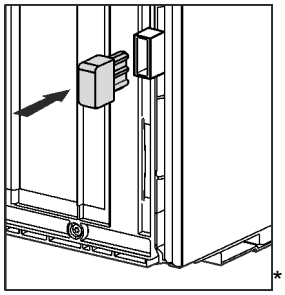

*

- ▶ Appliance with enclosed wall spacers: Insert the wall spacers on the rear of the appliance at the bottom left and right.

9 Setting up the appliance

CAUTION

Risk of injury due to heavy appliance!

- ▶ Have two people transport the appliance to its installation site.

WARNING

Risk of fire due to short circuit!

- ▶ When you set the appliance up: do not kink, jam or damage the mains cable.
- ▶ The appliance must not be operated with a defective mains cable.

WARNING

Fire hazard and danger of damage!

- ▶ Do not place appliances emitting heat e.g. microwaves, toasters etc. on the appliance!

Ensure that the following conditions are met:

- ❑ Only move the device when it is not loaded.
- ❑ Only install the appliance with help.

- ▶ Remove the mains cable from the package.
- ▶ Plug the mains cable's IEC socket completely into the appliance plug on the back of the appliance. Ensure that the IEC socket is tight.
- ▶ Use a cord to lay the mains plug to a freely accessible socket if required.

10 Setting up the appliance so that it is level

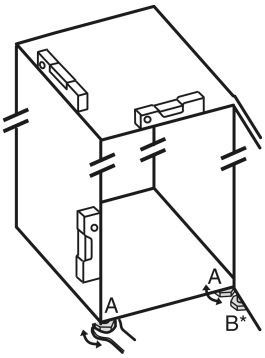

Fig. 5

▶ Unscrew the adjustable feet *Fig. 5 (A)* using the enclosed open-end spanner and a spirit level until the appliance is firmly aligned and level.

CAUTION

Risk of injury and damage due to the appliance tipping over!
If the additional adjustable foot on the lower swap bearing block does not rest properly on the floor, the appliance may tip over. This can lead to property damage and injuries.

▶ Unscrew the additional adjustable foot on the swap bearing block as instructed.

▶ Unscrew the adjustable foot *Fig. 5 (B)* on the swap bearing block with the enclosed open-end spanner until it rests on the floor.
▶ Turn the adjustable foot *Fig. 5 (B)* 90° further.
▷ The appliance is aligned.

11 After setting up

▶ Remove all transport safety components.
▶ Take off the protective film from the trim panels and drawer fronts.*
▶ Take off the protective film from the stainless steel rear panel.*
▶ Clean the appliance. (see operating instructions)
▶ Note the type (model, number), appliance designation, appliance/serial number, purchase date and dealer's address.

12 Installing multiple appliances

The appliances have been developed for different installation methods. If you wish to install several appliances next to each other or on top of each other, ensure that the following requirements are met:

❑ Only install appliances next to or on top of each other if they have been developed for this.
❑ Observe notices and the following table.

NOTICE

Risk of damage due to condensate!

▶ Do not place the appliance directly next to another cooling/refrigeration unit.

Model	Installation method
All models	Standalone
Models with a model designation starting with **S...**.	Side-by-Side (SBS)
Models without side wall heating	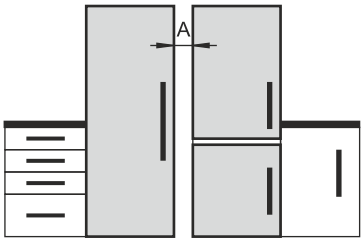 **Next to each other:** Install with gap **A** of 70 mm between the appliances. If you do not comply with this gap, condensation will form on the side walls between the appliances. 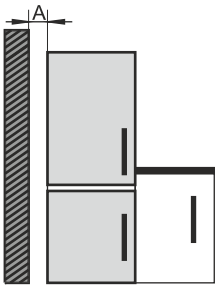 **On an exterior wall:** Install with gap **A** as with installation next to each other. If you do not comply with this gap, condensation may form on the appliance's side wall.

Models and their installation method

Assemble the appliances according to the separate installation instructions.

13 Integrating the appliance into a kitchen unit

The appliance can be integrated into a kitchen unit. Please observe the following installation conditions:

- If you fit a stacking cabinet above the appliance, you must allow for a ventilation cross-section with the appropriate depth at the rear of the stacking cabinet.
- If you place the appliance with the hinges next to a wall, you must take the distance to the side of the appliance into account.
- To ensure that the door can be opened fully, the appliance must protrude beyond the front thickness. Depending on the niche depth, the appliance may protrude further.

WARNING

Risk of fire due to short circuit!

▶ When you set the appliance up: do not kink, jam or damage the mains cable.
▶ The appliance must not be operated with a defective mains cable.

* Depending on model and options

Ensure that the following requirements are met:

- ❑ The socket is easily accessible and is not behind the appliance.
- ❑ Ventilation requirements are met. (see 4 Ventilation requirements) .
- ❑ Connection dimensions are taken into account. (see 17 Connecting the appliance to the power supply)
- ❑ Wall spacers are fitted.*

13.1 Niche dimensions for appliances with recessed handles*

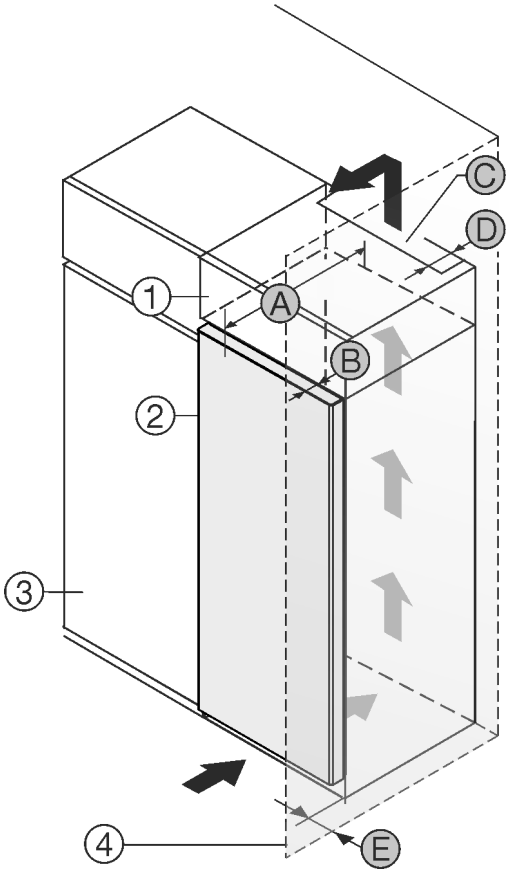

Fig. 6

(1) Top Unit
(2) Appliance
(3) Kitchen cupboard
(4) Wall
(A) Appliance depth
(B) Door depth
(C) Ventilation cross-section
(D) Distance from rear of the appliance
(E) Distance to the side of the appliance

Appliances with a recessed grip:	
A	675 mm[x]
B	75 mm
C	min. 300 cm²
D	min. 50 mm
E	min. 13 mm

Appliances with recessed handle and glass front / stone front:	
A	682 mm[x]
B	82 mm
C	min. 300 cm²
D	min. 50 mm
E	min. 20 mm

[x] On devices with wall spacer brackets, this dimension increases by 15 mm.*

13.2 Niche dimensions for appliances with lever handle*

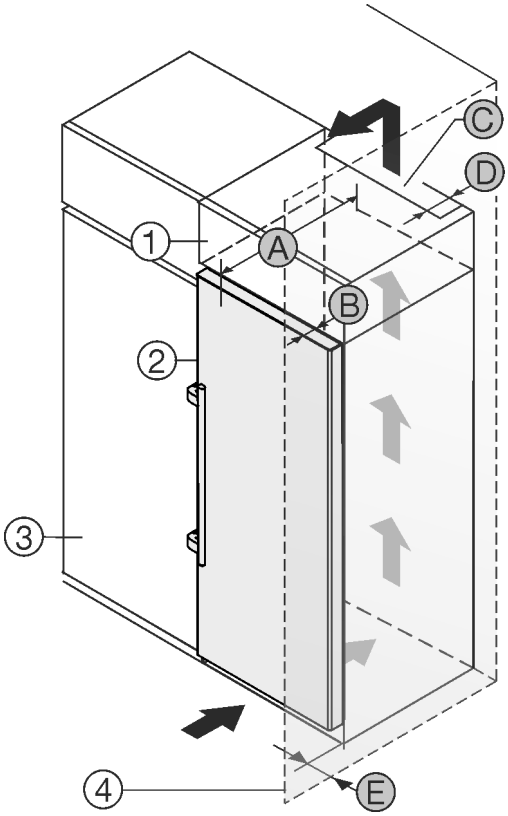

Fig. 7

(1) Top Unit
(2) Appliance
(3) Kitchen cupboard
(4) Wall
(A) Appliance depth
(B) Door depth
(C) Ventilation cross-section
(D) Distance from rear of the appliance
(E) Distance to the side of the appliance

Dimensions with lever handle:	
A	675 mm[x]
B	75 mm
C	min. 300 cm²
D	min. 50 mm
E	min. 57 mm

[x] On devices with wall spacer brackets, this dimension increases by 15 mm.*

14 Disposing of packaging

WARNING
Danger of suffocation due to packing material and plastic film!
▶ Do not allow children to play with packing material.

The packaging is made of recyclable materials:
- corrugated board/cardboard
- expanded polystyrene parts
- polythene bags and sheets
- polypropylene straps
- nailed wooden frame with polyethylene panel*

▶ Take the packaging material to an official collecting point.

15 **** freezer compartment door*

It is very easy to reposition the hinge of the **** freezer compartment door if the main door hinge is swapped. If the main door of the appliance can be opened to more than 115° (1), you can open the freezer compartment without repositioning the hinge. If the opening angle (2) of the appliance door is less than this, the hinge must be repositioned.

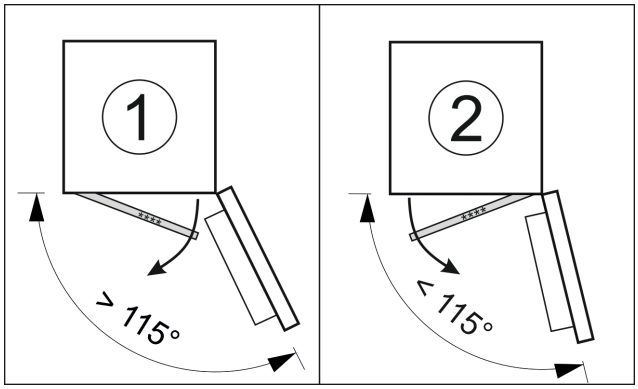

Fig. 8

15.1 Moving the door hinge

The slider for moving the door hinge is located on the back of the **** freezer compartment door at the bottom.

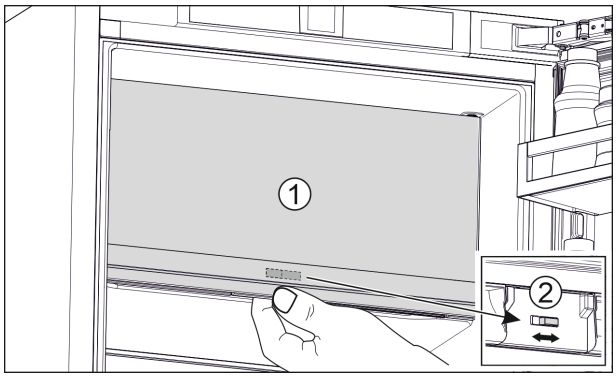

Fig. 9
▶ Close the **** freezer compartment door (1).
▶ Grab the **** freezer compartment door from below.
▶ Move the slider (2) either to the right or to the left.

16 Door hinge change

Tools

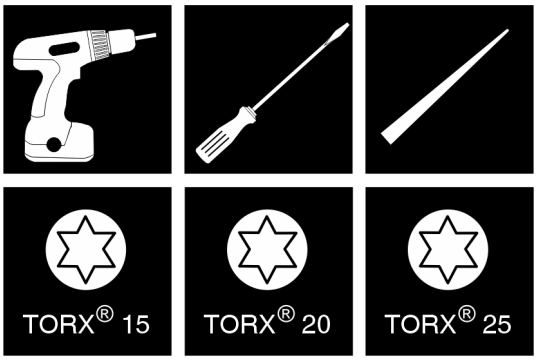

Fig. 10

NOTICE
Risk of damage due to door collision!
Damage to the appliances with Side-by-Side positioning. If you set up two appliances next to each other in a specific Side-by-Sidearrangement, the door hinge of both appliances is preset at the factory.
▶ Side-by-Side positioning: Do not change the door hinge.

These sections apply for appliances **without a soft stop mechanism**:
❑ For appliances **without** a soft stop mechanism
❑ For all appliances

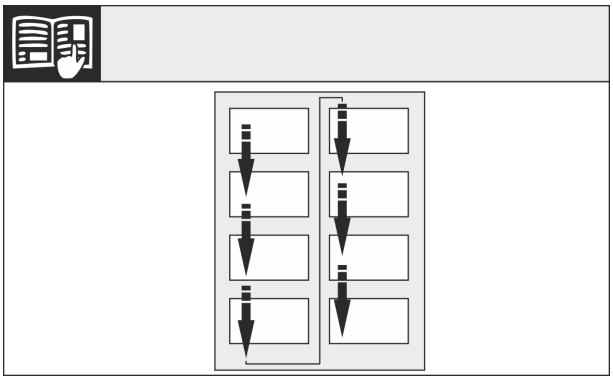

Fig. 11

Remember the reading direction.

16.1 Empty door racks

▶ Remove food from the door racks.
▷ Food does not fall out of the door when you remove the door.

16.2 Appliances without closing damper: Removing covers

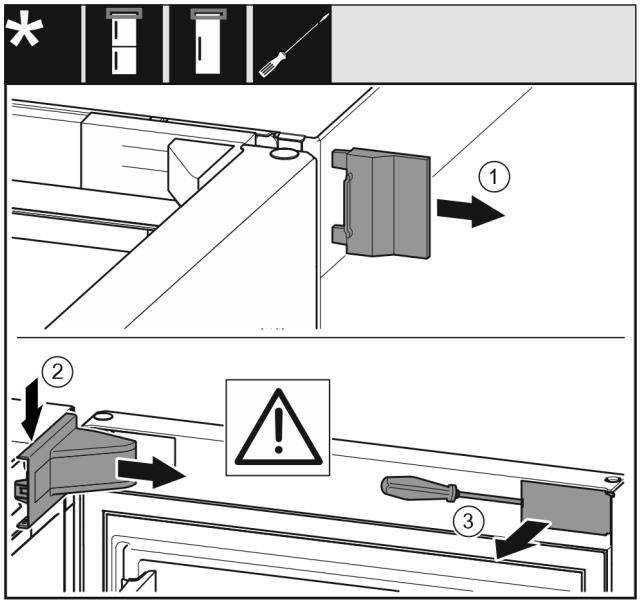

Fig. 12

▶ Open the door.
▶ Remove the outer cover *(1)*.
▶ Disengage and remove the swap bearing block cover *(2)*.

NOTICE
Risk of damage from screwdrivers!
If you damage the door seal, the door will not close properly resulting in inadequate cooling.
▶ Use a screwdriver carefully as an aid.
▶ Do not damage the door seal with the screwdriver.

▶ Use a screwdriver to disengage the cover *(3)* on the outside of the door and swivel it to the side.

16.3 Detaching the door

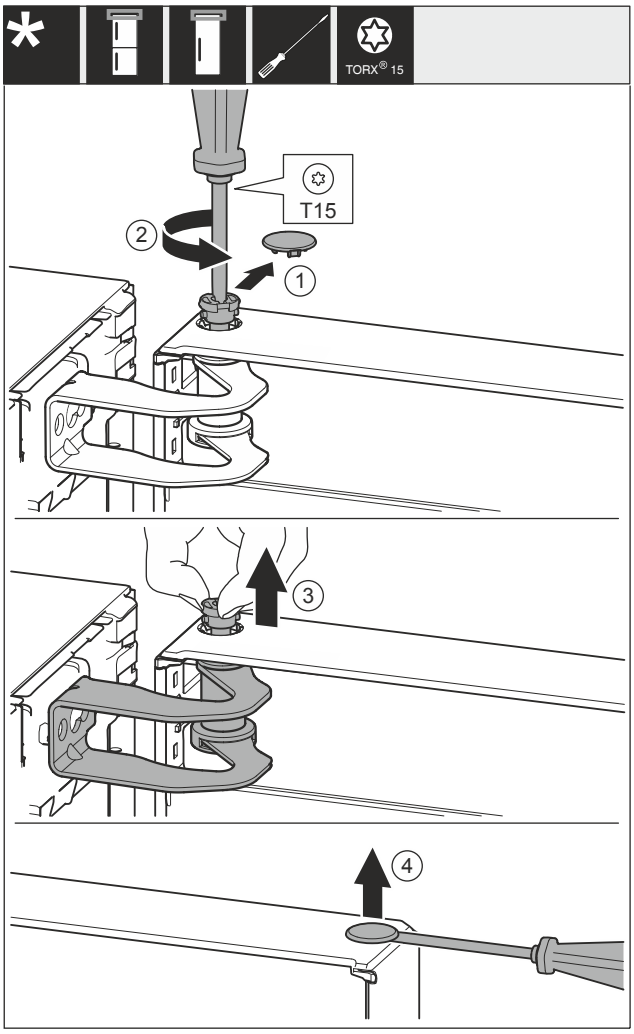

Fig. 13

▶ Carefully remove the cover *Fig. 13 (1)*.
▶ Use screwdriver to loosen the bolts *Fig. 13 (2)* a little.

CAUTION
Danger of injury due to door tipping out!
If you remove the bolt on the door completely, the door may tilt out and you may injure yourself.
▶ Hold the door firmly before removing the bolt.

▶ Hold door in place.
▶ Pull out the bolt *Fig. 13 (3)* with your fingers.
▶ Lift the door and put it to one side.
▶ Carefully lift and remove the cover *Fig. 13 (4)* with a screwdriver.

16.4 Reversing the freezer compartment door*

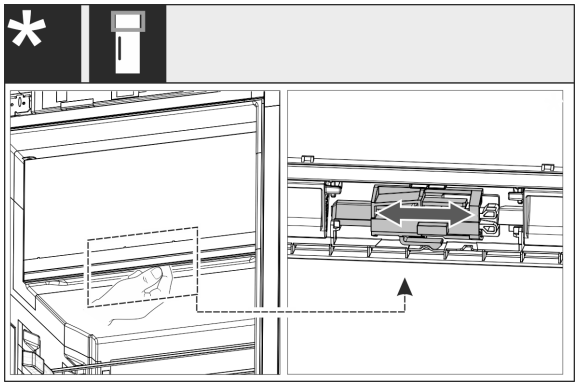

Fig. 14

▶ For single-door appliances: Reverse the door hinge of the 4-star compartment by shifting the lever. The door of the 4-star compartment must be shut for this. Move the lever on the back of the door from below.

16.5 Relocating the upper bearing components

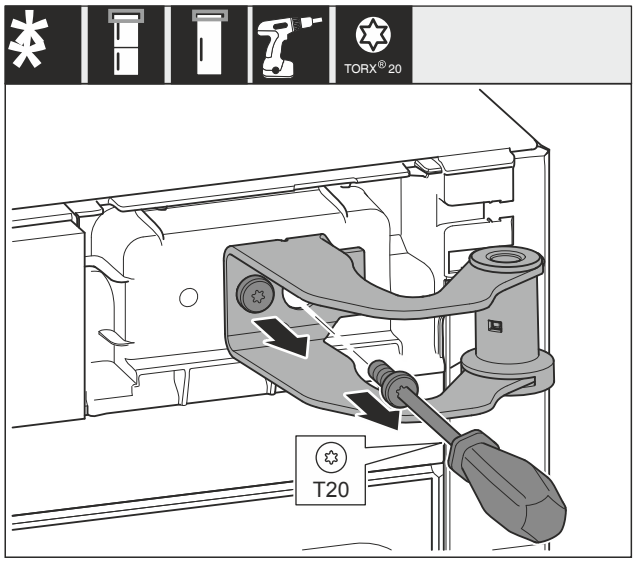

Fig. 15

▶ Unscrew both screws.
▶ Lift and remove the swap bearing block.

WARNING
Danger of injury due to door falling out!
If the bearing parts are not screwed on tightly enough, the door may fall out. This can result in serious injuries. In addition, the door may not close with the result that the appliance does not cool properly.
▶ Screw on the bearing brackets/bearing pins tightly with 4 Nm.
▶ Check all screws and retighten them if necessary.

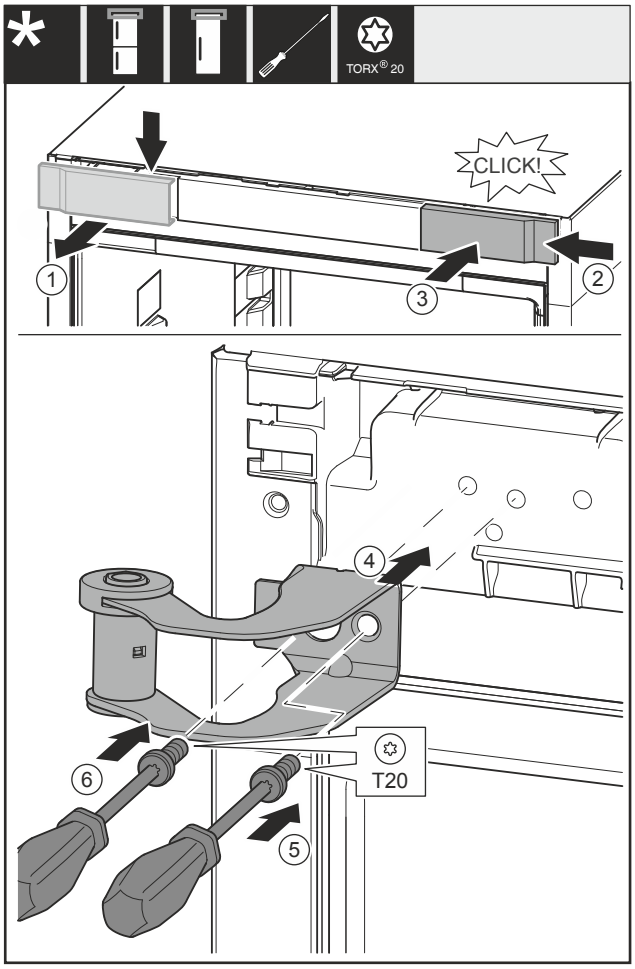

Fig. 16

▶ Remove the cover *Fig. 16 (1)* from above towards the front.
▶ Turn the cover *Fig. 16 (2)* by 180° and attach to the other side from the right.
▶ Engage the cover *Fig. 16 (3)*.
▶ Place the top swap bearing block *Fig. 16 (4)*.
▶ Screw the screw *Fig. 16 (5)* tight.
▶ Screw the screw *Fig. 16 (6)* tight.

16.6 Moving the lower bearing parts to the other side

For all appliances:

WARNING
Danger of injury due to door falling out!
If the bearing parts are not screwed on tightly enough, the door may fall out. This can result in serious injuries. In addition, the door may not close with the result that the appliance does not cool properly.
▶ Screw on the bearing brackets/bearing pins tightly with 4 Nm.
▶ Check all screws and retighten them if necessary.

*** Depending on model and options**

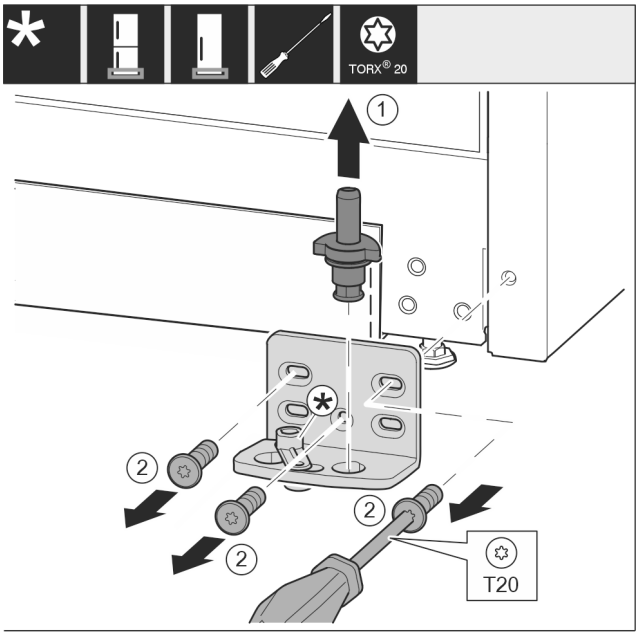

Fig. 17

▶ Pull the bearing bolt *Fig. 17 (1)* out upwards completely.
▶ Use screwdriver to unscrew the screws *Fig. 17 (2)* and remove the swap bearing block.

For appliances without a soft stop:

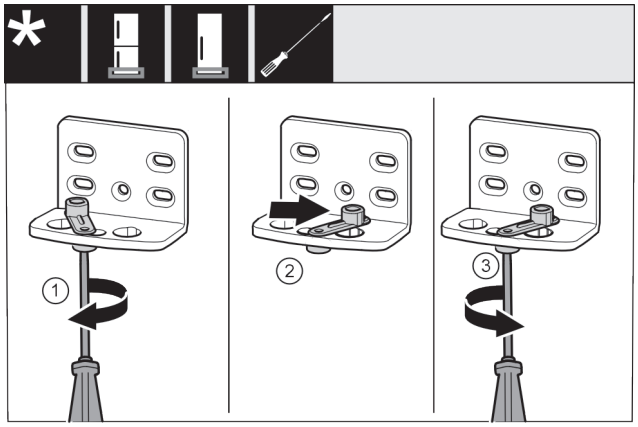

Fig. 18

▶ Use screwdriver to loosen the screw *Fig. 18 (1)*.
▶ Lift the door closing aid *Fig. 18 (2)* and turn 90° clockwise in the hole.
▶ Tighten screw *Fig. 18 (3)* with screwdriver.

For all appliances:

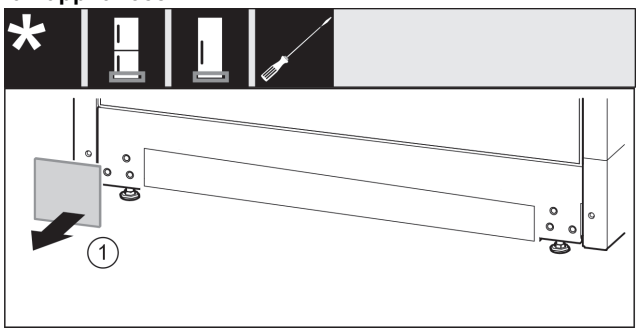

Fig. 19

▶ Remove cover *Fig. 19 (1)*.

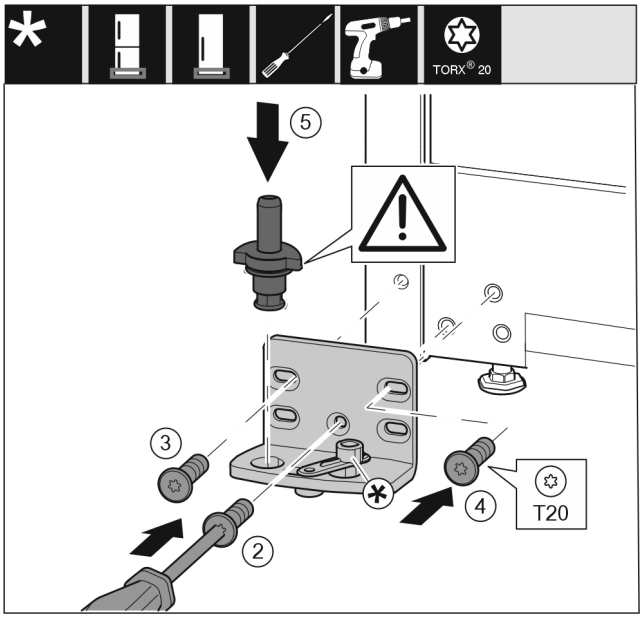

Fig. 20

▶ Place the swap bearing block on the other side and use a screwdriver to screw it on. Start with the screw *Fig. 20 (2)* at the bottom in the middle.
▶ Tighten screw *Fig. 20 (3)* and screw *Fig. 20 (4)*.
▶ Insert the bearing bolt *Fig. 20 (5)* completely. Ensure that the latching cam is pointing towards the rear.

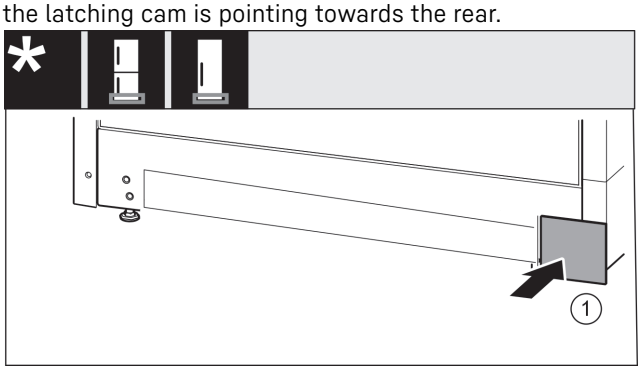

Fig. 21

▶ Re-attach the cover *Fig. 21 (1)* to the other side.

16.7 Moving the door bearing parts to the other side

For appliances without a soft stop:

WARNING
Danger of injury due to door falling out!
If the bearing parts are not screwed on tightly enough, the door may fall out. This can result in serious injuries. In addition, the door may not close with the result that the appliance does not cool properly.
▶ Screw on the bearing brackets/bearing pins tightly with 4 Nm.
▶ Check all screws and retighten them if necessary.

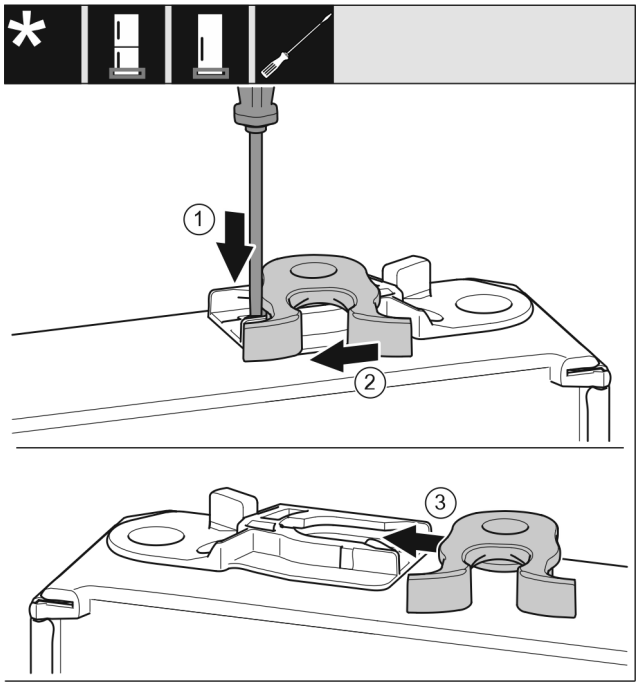

Fig. 22

- ▶ The bottom side of door faces upwards: Turn the door.
- ▶ Use a slotted screwdriver to push the tab *Fig. 22 (1)* downwards.
- ▶ Pull the closing hook *Fig. 22 (2)* out of the guide.
- ▶ Insert the closing hook *Fig. 22 (3)* into the guide on the other side.
- ▶ The upper side of door faces upwards: Turn the door.

16.8 Moving the handles to the other side*

For all appliances:

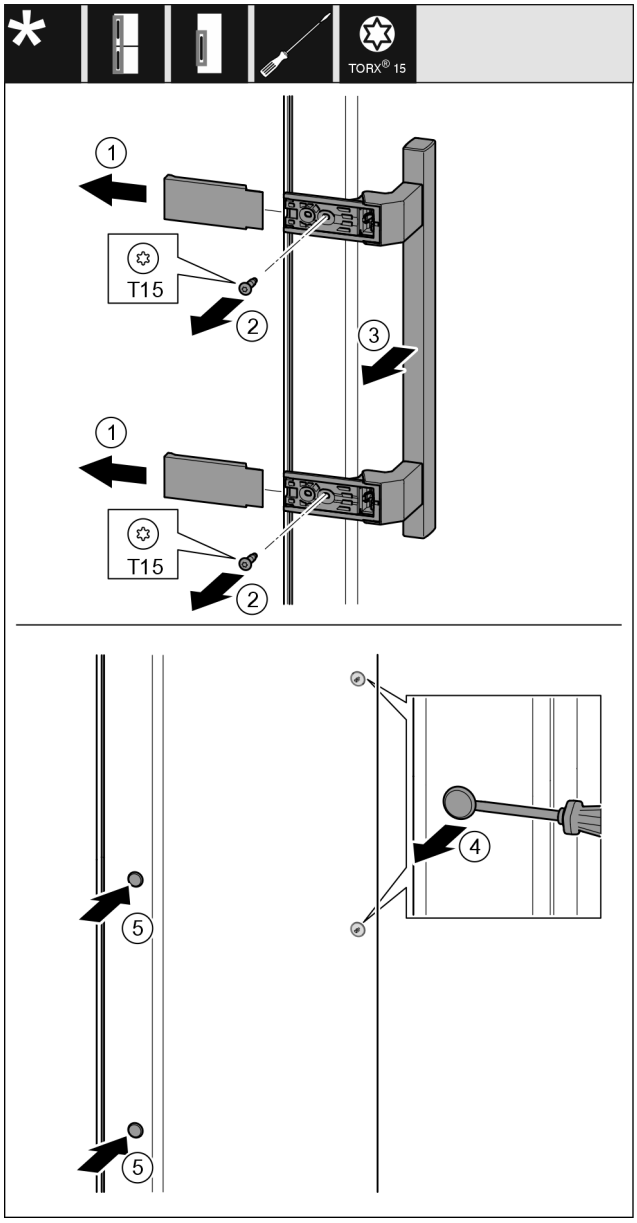

Fig. 23

- ▶ Remove the cover *Fig. 23 (1)*.
- ▶ Unscrew screws *Fig. 23 (2)* with screwdriver.
- ▶ Remove the handle *Fig. 23 (3)*.
- ▶ Use a slotted screwdriver to lift the side plug *Fig. 23 (4)* carefully and pull it out.
- ▶ Re-insert the plug *Fig. 23 (5)* on the other side.

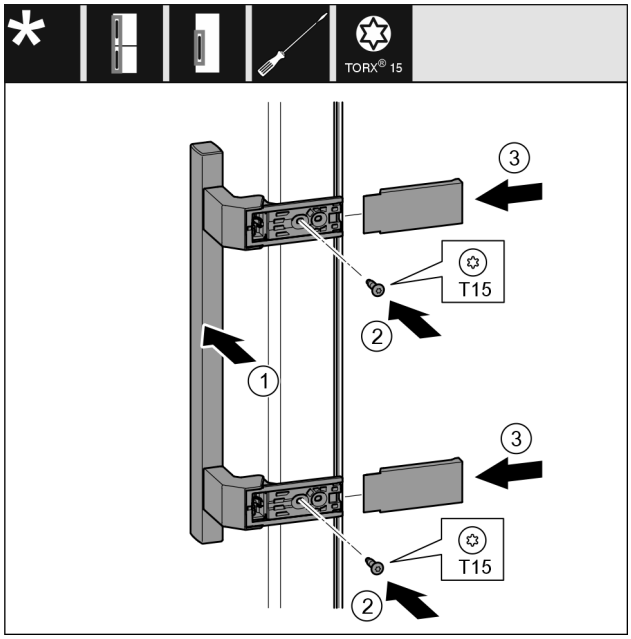

Fig. 24

▶ Place the handle *Fig. 24 (1)* on the opposite side.
▷ The screw holes must be exactly above each other.
▶ Tighten screws *Fig. 24 (2)* with screwdriver.
▶ Place the covers *Fig. 24 (3)* on the side and push them on.
▷ Ensure that they latch into place.

16.9 Fitting the door

▶ Place the door on the lower bearing bolt.

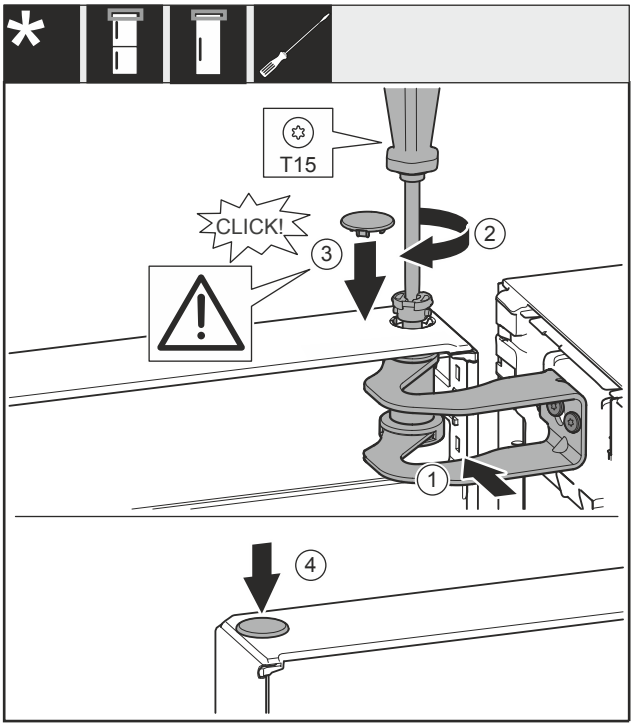

Fig. 25

▶ Align the door with the opening in the swap bearing block *Fig. 25 (1)*.
▶ Insert the bolt *Fig. 25 (2)* and use screwdriver to tighten it.
▶ Insert the cover *Fig. 25 (3)*.
▶ Check that the cover *Fig. 25 (3)* is resting on the door.
▶ Insert the cover *Fig. 25 (4)*.

16.10 Aligning the door

For all appliances:

WARNING
Danger of injury due to door falling out!
If the bearing parts are not screwed on tightly enough, the door may fall out. This can result in serious injuries. In addition, the door may not close with the result that the appliance does not cool properly.
▶ Screw the bearing brackets on firmly with 4 Nm.
▶ Check all screws and retighten them if necessary.

▶ Align the doors flush with the appliance housing using the two slots in the bearing bracket if needed. To do this undo the middle screw in the bottom bearing bracket with the T20 tool supplied. Undo the remaining screws a little with the T20 tool or with a T20 screwdriver and align using the slotted holes.
▶ Prop up the door: Take off the adjustable foot on the bearing bracket using the open-ended wrench SW10 until it comes into contact with the floor, then turn an additional 90°.

16.11 Fitting the covers

For appliances without a soft stop:

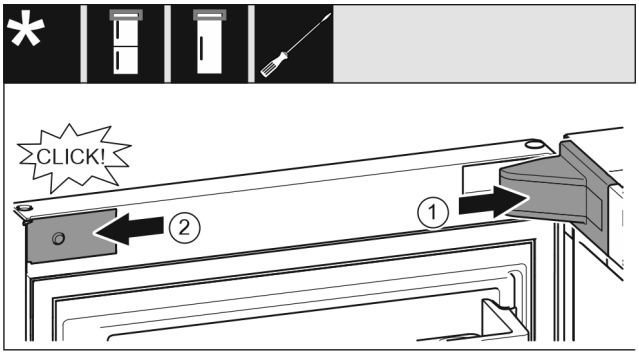

Fig. 26

The door is open 90°.
▶ Put the swap bearing block cover *Fig. 26 (1)* on and engage, push apart carefully if required.
▶ Place the trim *Fig. 26 (2)* on the side and engage.

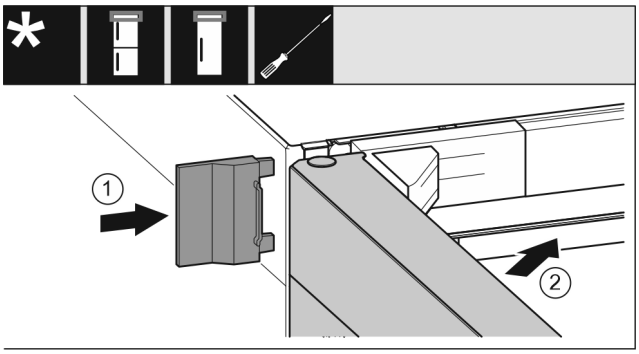

Fig. 27

▶ Push the outer cover *Fig. 27 (1)* on.
▶ Close the upper door *Fig. 27 (2)*.

17 Connecting the appliance to the power supply

WARNING
Danger of electric shock and injury due to damaged appliance or damaged mains cable!
Danger of cuts and fatal injuries. If the appliance or the mains cable is damaged during transport, you may be electrocuted. You could also cut yourself on damaged parts of the appliance housing.
▶ Check the appliance and the mains cable for damage after transport.
▶ Never put the appliance into operation if the appliance or the mains cable are damaged.
▶ Contact Customer Service.

You can connect your appliance to the mains using the power cable supplied separately. The mains power cable has an appliance coupler at one end and a mains plug at the other end.

Connect your appliance to the mains using the power cable included. The power cable has a mains plug at the free end.

Make sure that the following requirements are fulfilled:

- The appliance and power cable are undamaged.
- The appliance is set up in accordance with the regulations. (see 8 Mounting wall spacers*)
- Requirements for the electrical connection are met.
- Dimensions for connection in accordance with regulations are known and observed. (see 5 Connection dimensions for the power supply)
- Mains voltage and frequency correspond to the specifications on the type plate.
- The socket is earthed according to the regulations and fused.
- The fuse tripping current is between 10 A and 16 A.
- The socket is easily accessible and is not behind the appliance. (see 5 Connection dimensions for the power supply)

NOTICE
Danger of damage to incorrect operation!
Damage to the electrical components of the appliance.
▶ Only use the supplied mains cable.

WARNING
Danger of fire due to incorrect connection!
Burns.
Damage to the appliance.
▶ Do not use an extension cable.
▶ Do not use distributor blocks.

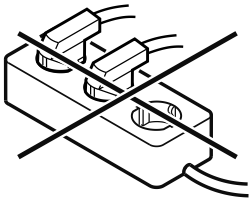

NOTICE
Danger of damage to incorrect connection!
Damage to the appliance.
▶ Do not connect the appliance to a stand-alone inverter, e.g. solar power systems and petrol generators.

▶ Connect the mains cable plug to the power supply. Ensure that the plug is tightly in the socket.

▶ Connect the mains cable plug to the power supply. Ensure that the plug is tightly in the socket.
▷ The Liebherr logo appears in the display.
▷ The display switches to the standby symbol.
▷ If no action occurs within 60 seconds: The standby symbol fades or disappears.
▷ The appliance is connected. For information regarding first use, see the following section or the operating instructions.

* Depending on model and options

home.liebherr.com/fridge-manuals

EN fridge

Issue date: 20260316

Part number index: 7086786-00

Liebherr-Hausgeräte Marica EOOD
Bezirk Plovdiv
4202 Radinovo
Bulgarien

Installation Guide

Quality, Design and Innovation

home.liebherr.com/fridge-manuals

LIEBHERR

Contents

1 General safety instructions..... 2

2 Installation dimensions..... 3

3 Transporting the appliance..... 4

3.1 Transporting the appliance for initial use..... 4

3.2 Transporting the appliance after initial use..... 4

4 Installing multiple appliances..... 4

5 Side by side assembly..... 4

6 After setting up..... 8

The manufacturer is continually working on the further development of all types and models. Please be aware that we reserve the right to make changes to the shape, equipment and technology.

Symbol	Explanation
	Read instructions Please read the information in these instructions carefully to understand all of the benefits of your new appliance.
	Additional information on the Internet The digital manual with additional information and in other languages can be found via the QR code on the front of the manual or by entering the service number at **home.liebherr.com/fridge-manuals**. The service number can be found on the serial tag: 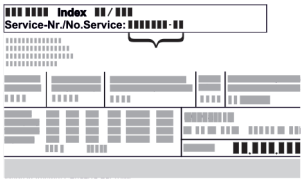 *Fig.* Example illustration
	Check appliance Check all parts for transport damage. If you have any complaints, please contact your agent or customer service.
	Differences These instructions apply to a range of models, so differences are possible. Sections that apply to certain models only are marked with an asterisk (*).
	Instructions and results Instructions are marked with a ▶. Results are marked with a ▷.
	Videos Videos about the appliances are available on the YouTube channels of Liebherr-Hausgeräte.

Open source licences:

The appliance contains software components that use open source licences. Information on the open source licences used can be found here: **home.liebherr.com/open-source-licences**

1 General safety instructions

- Please keep this assembly manual in a safe place so you can refer back to it at any time.
- If you pass the appliance on, please hand this assembly manual to the next user.
- Read this assembly manual carefully before installation and use to ensure safe and correct use of the appliance. Follow the instructions, safety instructions and warning messages included at all times. They are important for ensuring you can operate and install the appliance safely and without any problems.
- First read the general safety instructions in the "General safety instructions" section of the **operating instructions**, which accompany these installation instructions, and follow them. If you cannot find the **operating instructions**, you can download the **operating instructions** from the internet by entering the service number at **home.liebherr.com/fridge-manuals**. The service number can be found on the serial tag:

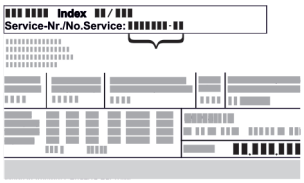

- **Observe the warning messages and other detailed information in the other sections when installing the appliance:**

	DANGER	identifies a situation involving direct danger which, if not obviated, may result in death or severe bodily injury.
	WARNING	identifies a dangerous situation which, if not obviated, may result in death or severe bodily injury.
	CAUTION	identifies a dangerous situation which, if not obviated, may result in minor or medium bodily injury.
	NOTICE	identifies a dangerous situation which, if not obviated, may result in damage to property.
	Note	identifies useful instructions and tips.

* Depending on model and options

2 Installation dimensions

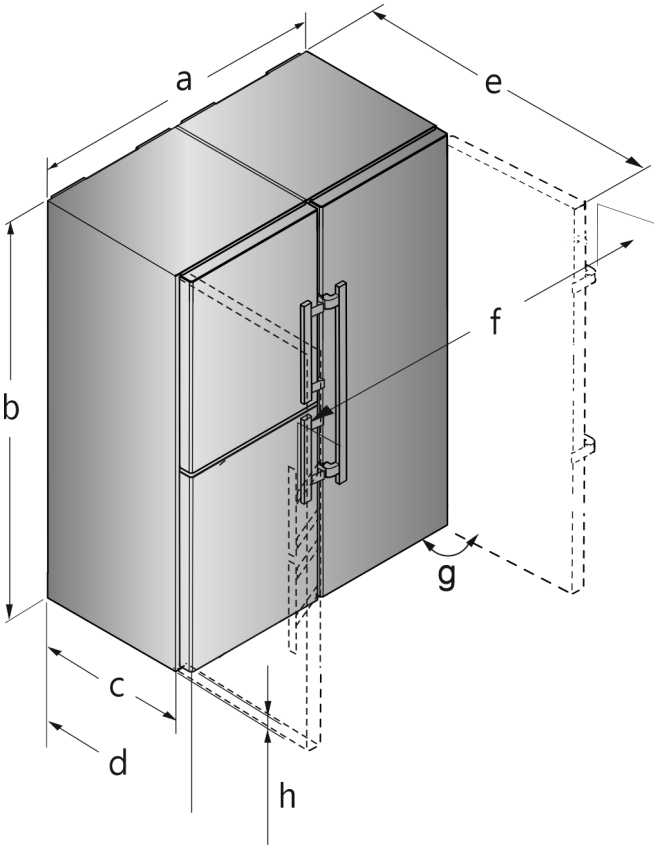

*Fig. 1 Example illustration**

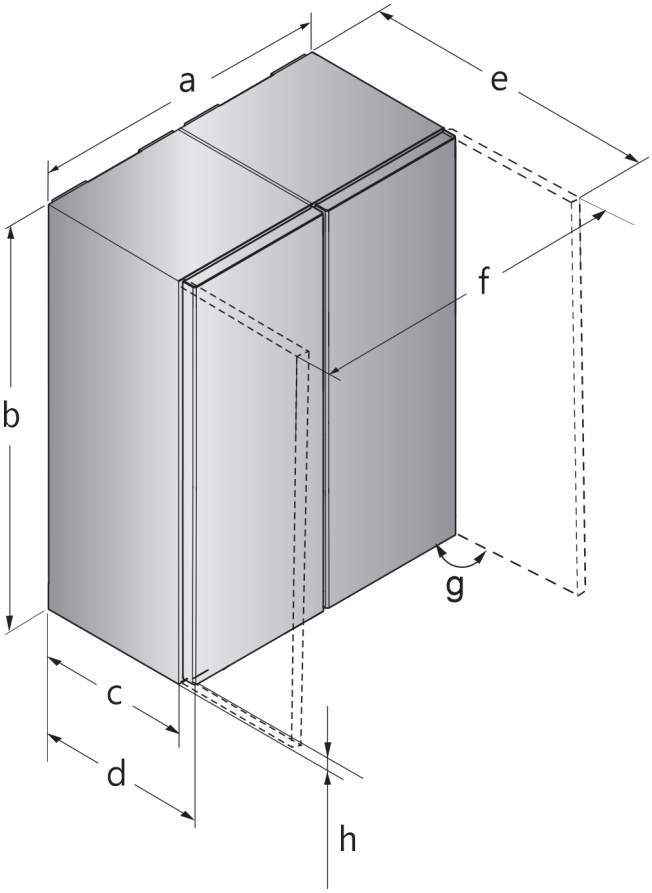

*Fig. 2 Example illustration**

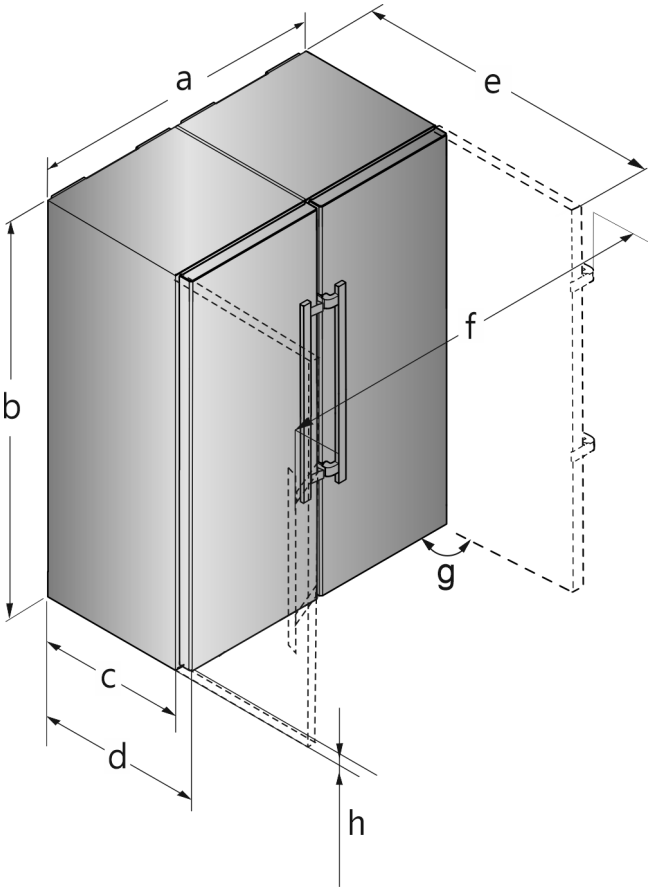

*Fig. 3 Example illustration**

XCC.. 52.. / XRC.. 52.. / XRF.. 52.. *	
a (mm)	1204
b (mm)	1855
c (mm)[x]	600
d (mm)[x]	675
e (mm)[x]	1222
f (mm)	1318
g	90°
h (mm)	35

Dimensions with lever handle

XRF.. 52.. *	
a (mm)	1226
b (mm)	1855
c (mm)[x]	600
d (mm)[x]	675
e (mm)[x]	1217
f (mm)	1252
g	90°
h (mm)	35

Devices with a recessed grip

x

e These dimensions apply for an opening angle of 90°.
f Spacing angles will vary according to the opening angle.

3 Transporting the appliance

3.1 Transporting the appliance for initial use

Ensure that the following requirements are met:

- ❑ The appliance is packaged.
- ❑ The appliance is upright.

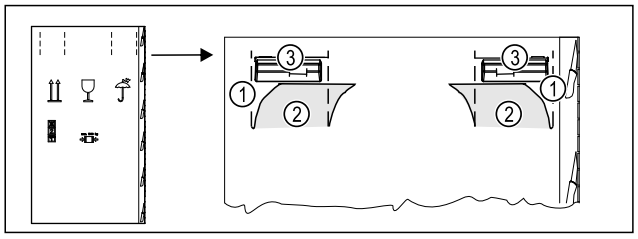

Fig. 4

- ▶ Press the packaging cardboard into the perforation *Fig. 4 (1)* at the top.
- ▶ Pull out any tabs *Fig. 4 (2)* that have been pushed in.
- ▷ Carrying handle *Fig. 4 (3)* visible on the right and left.
- ▶ Hold the appliance by the carrying handles *Fig. 4 (3)*.
- ▶ Transport the appliance with the help of two people.
- ▶ Unpacking the appliance.

3.2 Transporting the appliance after initial use

Observe the following instructions if you wish to transport or move the appliance again after initial use.

Ensure that the following requirements are met:

- ❑ The appliance is emptied.
- ❑ The appliance is upright.
- ❑ Appliance with door(s): Door is secured against accidental opening.
- ❑ Appliance with telescopic unit: The telescopic unit is secured against accidental opening.
- ❑ Appliance with adjustable feet: Adjustable feet are screwed in.

- ▶ Hold the appliance by the carrying handles.
- ▶ Transport the appliance with the help of two people.

After transport:

- ▶ Unscrew the adjustable feet on the appliance.
- ▶ Align the appliance.

4 Installing multiple appliances

The appliances have been developed for different installation methods. If you wish to install several appliances next to each other or on top of each other, ensure that the following requirements are met:

- ❑ Only install appliances next to or on top of each other if they have been developed for this.
- ❑ Observe notices and the following table.

NOTICE
Risk of damage due to condensate!
- ▶ Do not place the appliance directly next to another cooling/refrigeration unit.

Model	Installation method
All models	Standalone
Models with a model designation starting with **S...**.	Side-by-Side (SBS)
Models without side wall heating	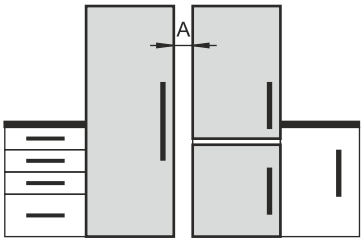 **Next to each other:** Install with gap **A** of 70 mm between the appliances. **Next to each other:** Install with gap **A** of 100 mm between the appliances. If you do not comply with this gap, condensation will form on the side walls between the appliances. 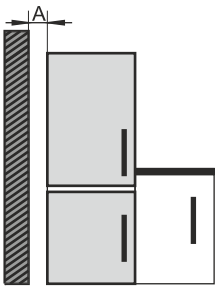 **On an exterior wall:** Install with gap **A** as with installation next to each other. If you do not comply with this gap, condensation may form on the appliance's side wall.

Models and their installation method

Assemble the appliances according to the separate installation instructions.

5 Side by side assembly

NOTICE
Risk of damage due to door collision!
Damage to the appliances with Side-by-Side positioning. If you set up two appliances next to each other in a specific Side-by-Sidearrangement, the door hinge of both appliances is preset at the factory.
- ▶ Side-by-Side positioning: Do not change the door hinge.

Set up the freezer or the appliance with the freezer compartment from the left when viewed from the front. These appliances are equipped with a side-wall heater on the right hand side to prevent condensation forming.

All the assembly components are supplied with the appliance.

Assembly parts in the accessory kit

For appliances with lever handle*

*** Depending on model and options**

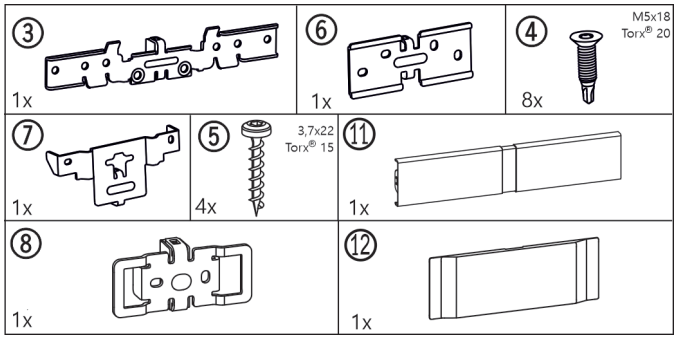

*Fig. 5 **

For appliances with recessed grip*

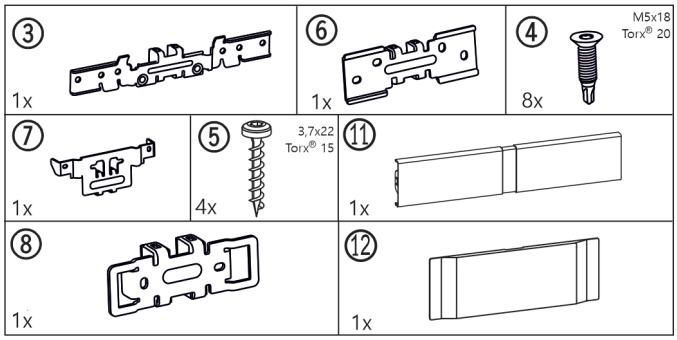

*Fig. 6 **

For all appliances

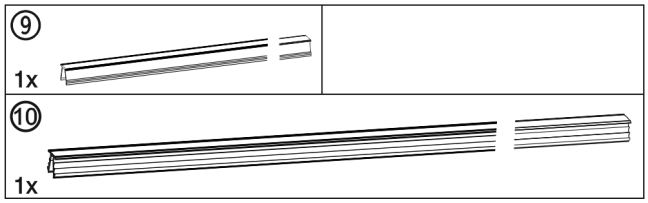

Fig. 7

For appliances with bottom soft stop mechanism*

Base trims*

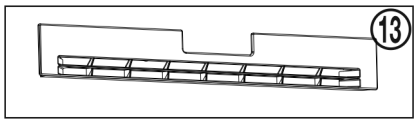

*Fig. 8 **

For appliances without bottom soft stop mechanism*

Base trims*

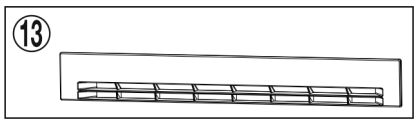

*Fig. 9 **

Tool for assembly

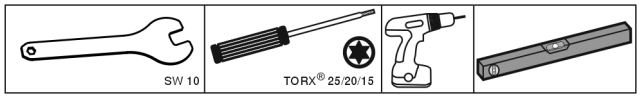

Fig. 10

Ensure that the following tools are to hand:

- ❑ Size 10 open-ended spanner (supplied)
- ❑ Torx® 25/20/15 screwdriver
- ❑ Cordless screwdriver
- ❑ Spirit level

Information on moving the SBS combination:

- ❑ Set up the appliances as close to the final position as possible before assembly.
  The appliances must be accessible on all sides for correct assembly.
- ❑ When moving the appliances after assembly, always take hold from the front outer corners. Never press your knee against the side walls or door.
- ❑ The SBS combination can be moved most easily when moved diagonally, that is by alternately pushing from the left and right corners.
  If the combination is standing directly in front of the recess, push it in straight.

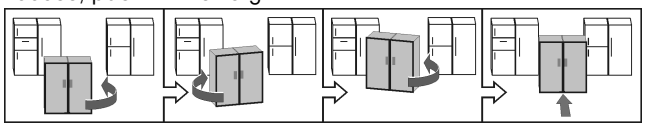

- ❑ If the combination has to be pulled out of the recess again, take hold of the bottom third of the combination and pull forward straight.

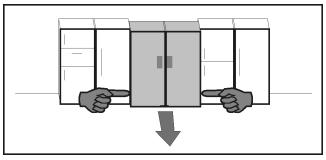

NOTICE

Risk of damage when moving the combined SBS appliance!
The combined SBS appliance is heavy once assembled. The appliance may be dented by improper movement.

▶ Observe the information given on moving the appliance (see above).

▶ Take off all protective film from the exterior of the appliance.

Bottom front of the appliance:

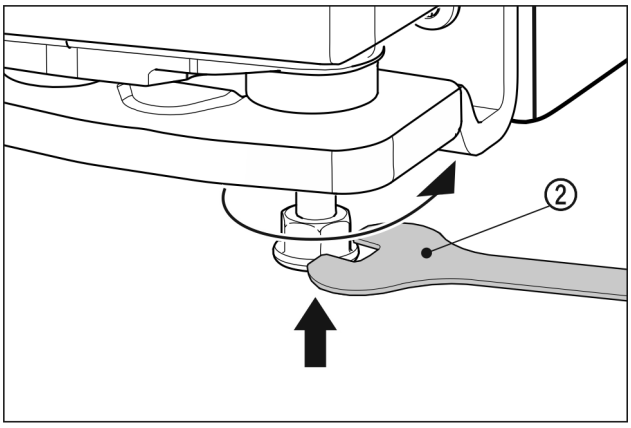

Fig. 11

▶ Tighten the outer adjusting feet. The appliances can be moved easier.

For appliances with lever handle*

▶ Push both appliances so that they are approx. 10 mm apart from each other, and they are positioned flush facing forwards.*

For appliances with recessed grip*

▶ Push both appliances so that they are approx. 32 mm apart from each other, and they are positioned flush facing forwards.*

▶ Straighten the appliances up using a spirit level on the top of the appliance.

Top front of the appliance:

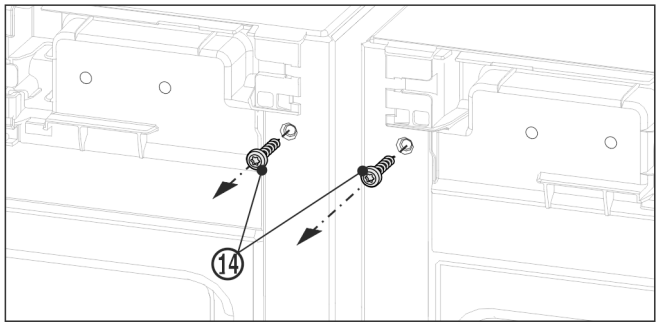

Fig. 12

- ▶ Remove the existing covers.
- ▶ Before fitting the top bracket remove both earthing screws *Fig. 12 (14)*.
- ▶ Store the earthing screws safely. The screws will be necessary for fitting the bracket as shown below.

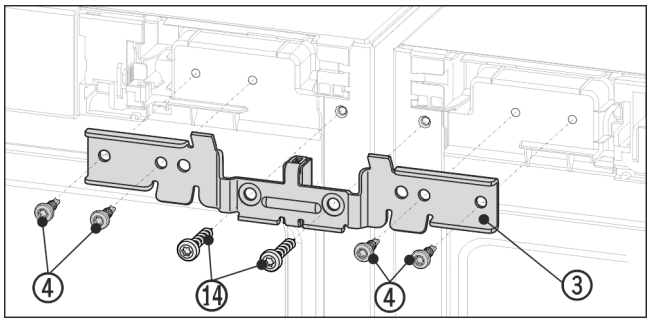

Fig. 13 Example illustration

- ▶ Slide the bracket *Fig. 13 (3)* onto the pins with the spacer between the appliances. Loosely screw in the brackets alternately right and left with four screws *Fig. 13 (4)* and the previously removed earthing screws *Fig. 13 (14)*.
- ▶ If necessary: Check the appliance is stood straight by laying a spirit level on the top of the appliance.

Bottom front of the appliance:

- ▶ Remove the existing covers.

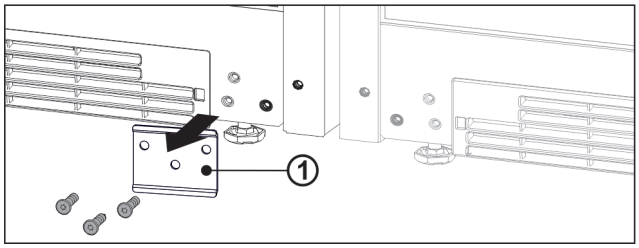

Fig. 14

- ▶ If the metal plate *Fig. 14 (1)* is installed, unscrew the metal plate.

Note
If you want to transport the appliance or set it up as an individual appliance, you must re-attach the metal plate.

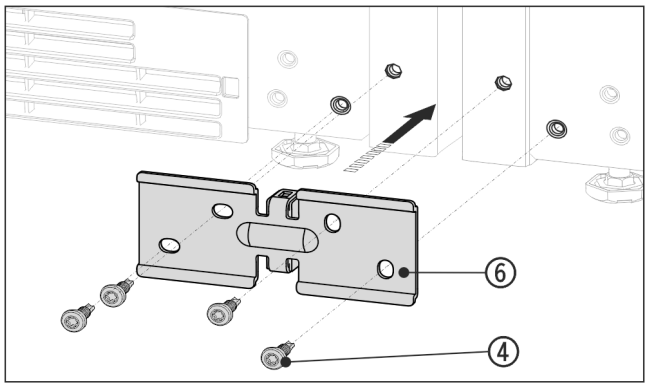

Fig. 15 Example illustration

- ▶ Slide the bracket *Fig. 15 (6)* on with the spacer between the appliances and screw in loosely with the 4 screws *Fig. 15 (4)*.
- ▶ If necessary: Set up the appliances so that they are level.
- ▶ Tighten the screws firmly at the top and bottom.

Top rear of the appliance:

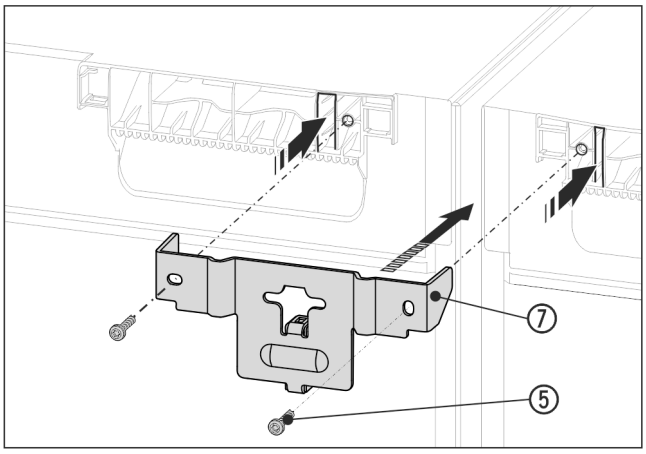

Fig. 16 Example illustration

- ▶ Slide the bracket *Fig. 16 (7)* onto the appliance ceiling with the lugs and with the spacer between the appliances. Screw in firmly with 2 screws *Fig. 16 (5)*.

Bottom rear of the appliance:

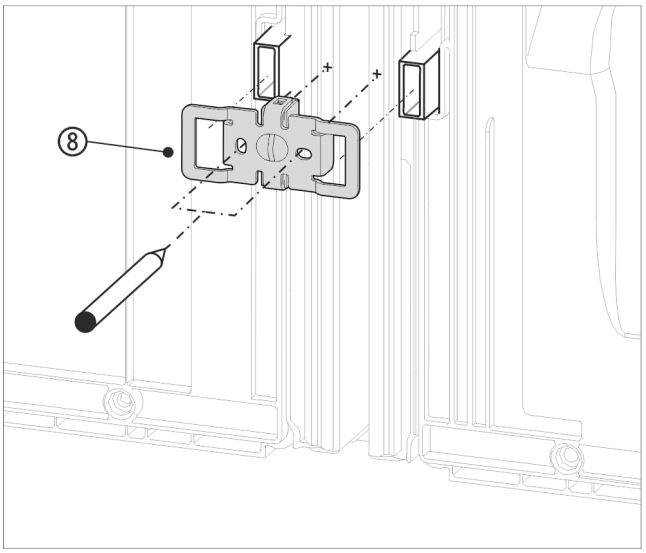

Fig. 17 Example illustration

- ▶ Slide the bracket *Fig. 17 (8)* on with the slots over the retainer for the wall spacers.

Note
Holes for the screws must be pre-drilled.

- ▶ Mark the position of the holes to be drilled with a pencil.
- ▶ Remove the bracket again.

Note
Only drill through the metal plate. Drill depth approx. 1 mm.

*** Depending on model and options**

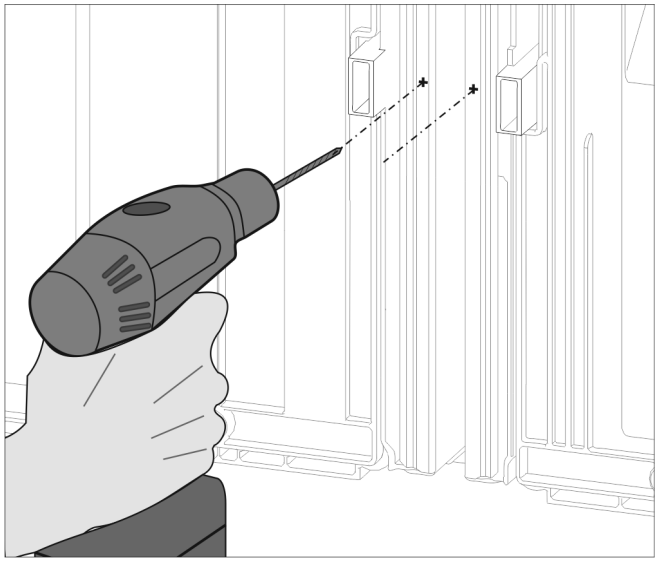

Fig. 18

▶ Pre-drill the screw holes with a 3 mm bit and deburr.

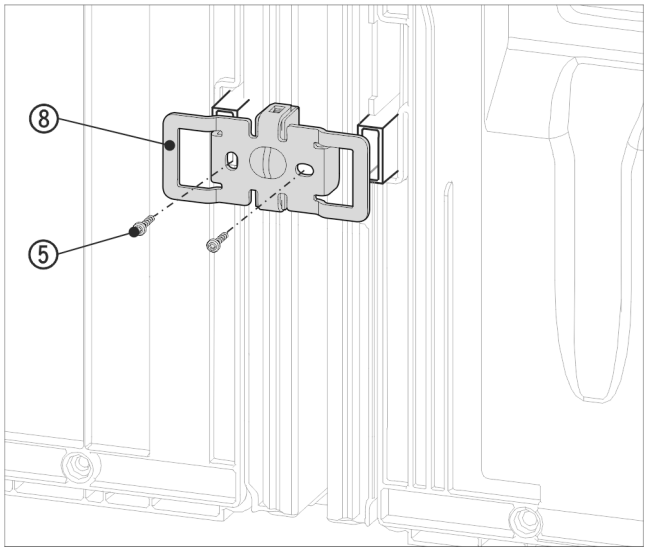

Fig. 19 Example illustration

▶ Slide the bracket *Fig. 19 (8)* on once more with the slots over the retainer for the wall spacers.

▶ Screw in tightly with the 2 screws *Fig. 19 (5)*.

Before fitting the top and front cover strips, push the two bars together over the whole length. The strips can be inserted more easily into the gap. Use a soft cloth to push the strips in to avoid dents in the surface of the cover strips. Press the strips into the gap carefully and evenly in order to achieve an optimum bond.

For appliances with lever handle

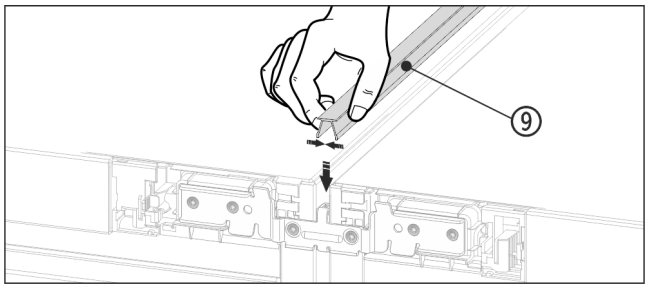

Fig. 20

▶ On the top press the short cover strip *Fig. 20 (9)* into the horizontal gap.

For appliances with recessed grip*

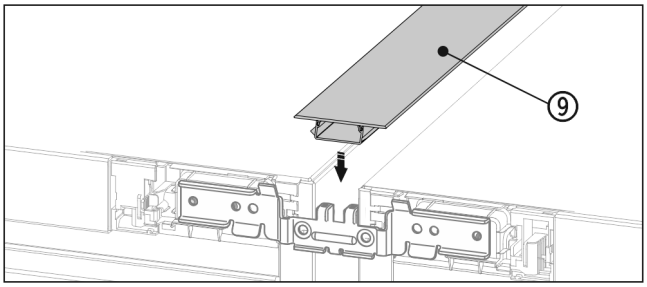

*Fig. 21 **

▶ On the top press the short cover strip *Fig. 21 (9)* into the horizontal gap.*

For appliances with lever handle*

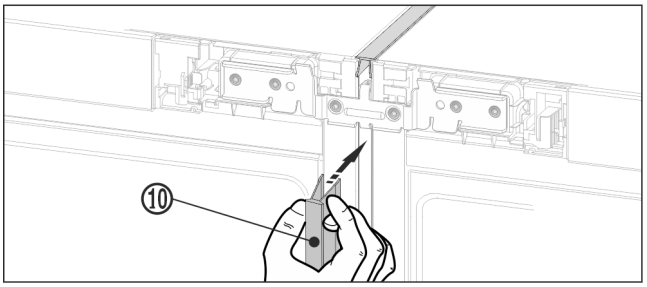

*Fig. 22 **

▶ On the front, press the long cover strip *Fig. 22 (10)* into the vertical gap. Ensure that the strip rests on the connecting plate.*

For appliances with recessed grip*

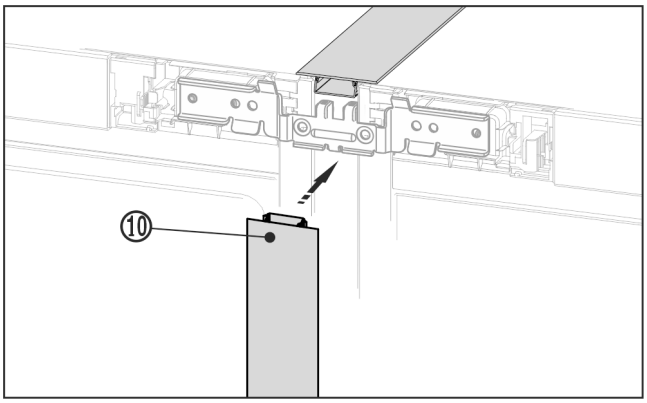

*Fig. 23 **

▶ On the front, press the long cover strip *Fig. 23 (10)* into the vertical gap. Ensure that the strip rests on the connecting plate.*

▶ Take off the protective film from the cover strip.*

Top front of the appliance:

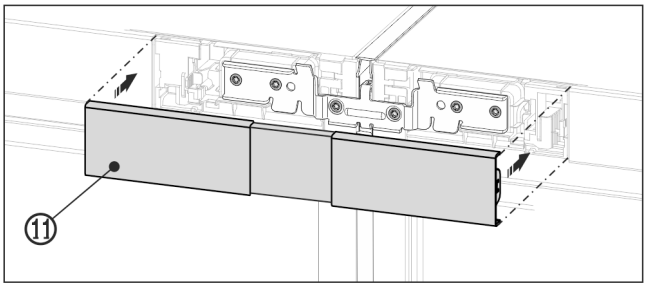

Fig. 24 Example illustration

▶ Snap the top cover *Fig. 24 (11)* onto the still open gap between the two control panel trims. Make sure that the outer sides of the cover form a flush finish with the control panel trims.

Bottom front of the appliance

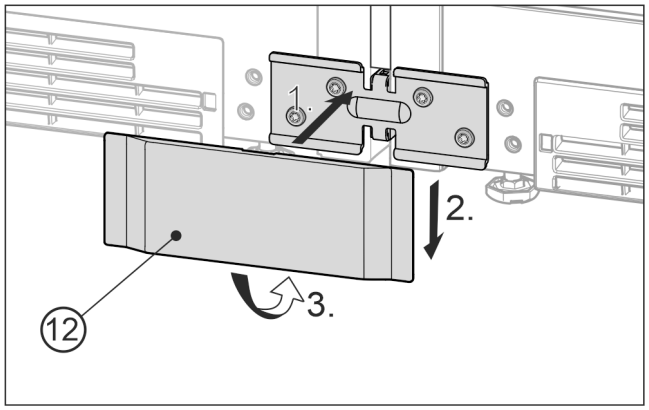

Fig. 25 Example illustration

- ▶ Place the bottom cover *Fig. 25 (12)* onto the bracket from the front *Fig. 25 (1)*, slide it down *Fig. 25 (2)* and snap it in at the bottom *Fig. 25 (3)*.
- ▶ To disassemble the cover, insert a screwdriver at the bottom on the side below the cover and release both lower hooks. The cover can swing out upwards.
- ▶ Connect the combination electrically. See the installation guide.
  Appliances with IceMaker or InfinitySpring:
- ▶ Connect the appliance to the fixed water connection. See the installation guide.

NOTICE
Risk of damage when moving the combined SBS appliance!
The combined SBS appliance is heavy once assembled. The appliance may be dented by improper movement.
- ▶ Observe the information given on moving the appliance (see above).

- ▶ Carefully push the SBS combination into the specified position.
- ▶ If necessary, align the SBS combination using the levelling feet.
- ▶ Then prop up the door: Lower outer adjusting feet on the bearing bracket until they are resting on the floor.

The doors can be straightened at height on the outer lower bearing brackets:
- ▶ Open the door to 90°.

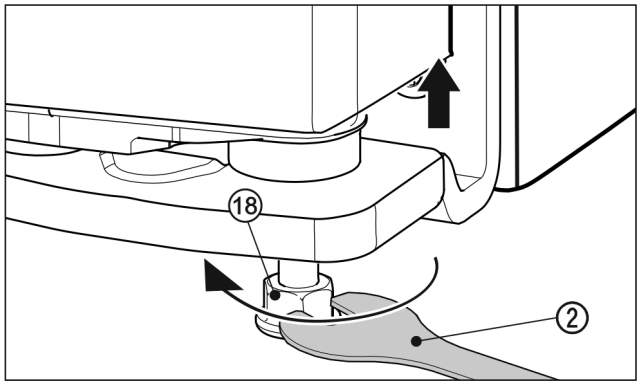

Fig. 26

- ▶ To lift the door, unscrew the adjusting foot *Fig. 26 (18)* clockwise using the supplied open-ended spanner *Fig. 26 (2)* until the foot makes contact with the floor. Then continue turning until the door is adjusted to the right height. When delivered, the bearing pin is completely screwed in.

Fit decorative base trim.*

After you have assembled and straightened out the appliances, the base trims can be fitted at the bottom of the appliances. The base trims are decorative and will not affect the functionality of the appliances.*

For appliances with bottom soft stop mechanism*

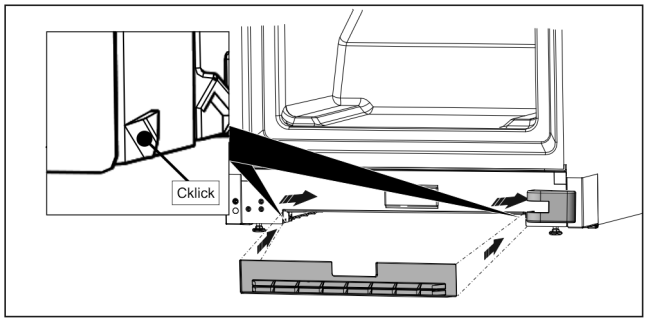

*Fig. 27 **

- ▶ Attach the base trim to the bottom of the appliance in the recess.*

Note
The base trim must be pushed to a little behind the bearing bracket cover.*

For appliances without bottom soft stop mechanism*

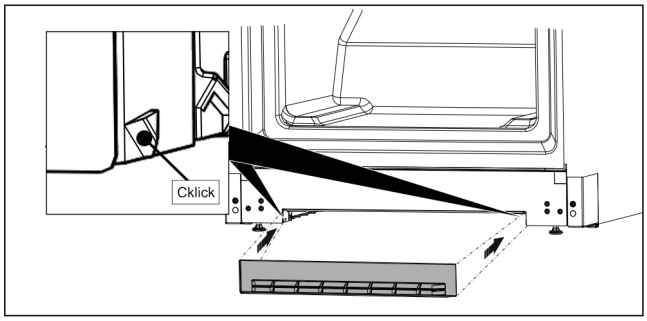

*Fig. 28 **

- ▶ Secure the base trim recess at the bottom of the appliance, as shown in the figure.*

6 After setting up

- ▶ Remove all transport safety fittings from the interior.

NOTICE
Damage to property caused by pointed or sharp objects!
Using pointed or sharp objects when removing packaging material may damage the appliance.
- ▶ Do not use any pointed or sharp objects to remove the packaging material.

- ▶ Remove protective films from the interior: Peel the film off flat along the surface of the component to minimise its adhesive force.
- ▶ Clean the appliance.
- ▶ Note down the type (model, number), appliance name, appliance/serial number, date of purchase and retailer's address.

home.liebherr.com/fridge-manuals

EN Side-by-Side combinations

Issue date: 20260729

Part number index: 7086153-00

Liebherr-Hausgeräte GmbH
Memminger Straße 77-79
88416 Ochsenhausen
Deutschland