User Guide

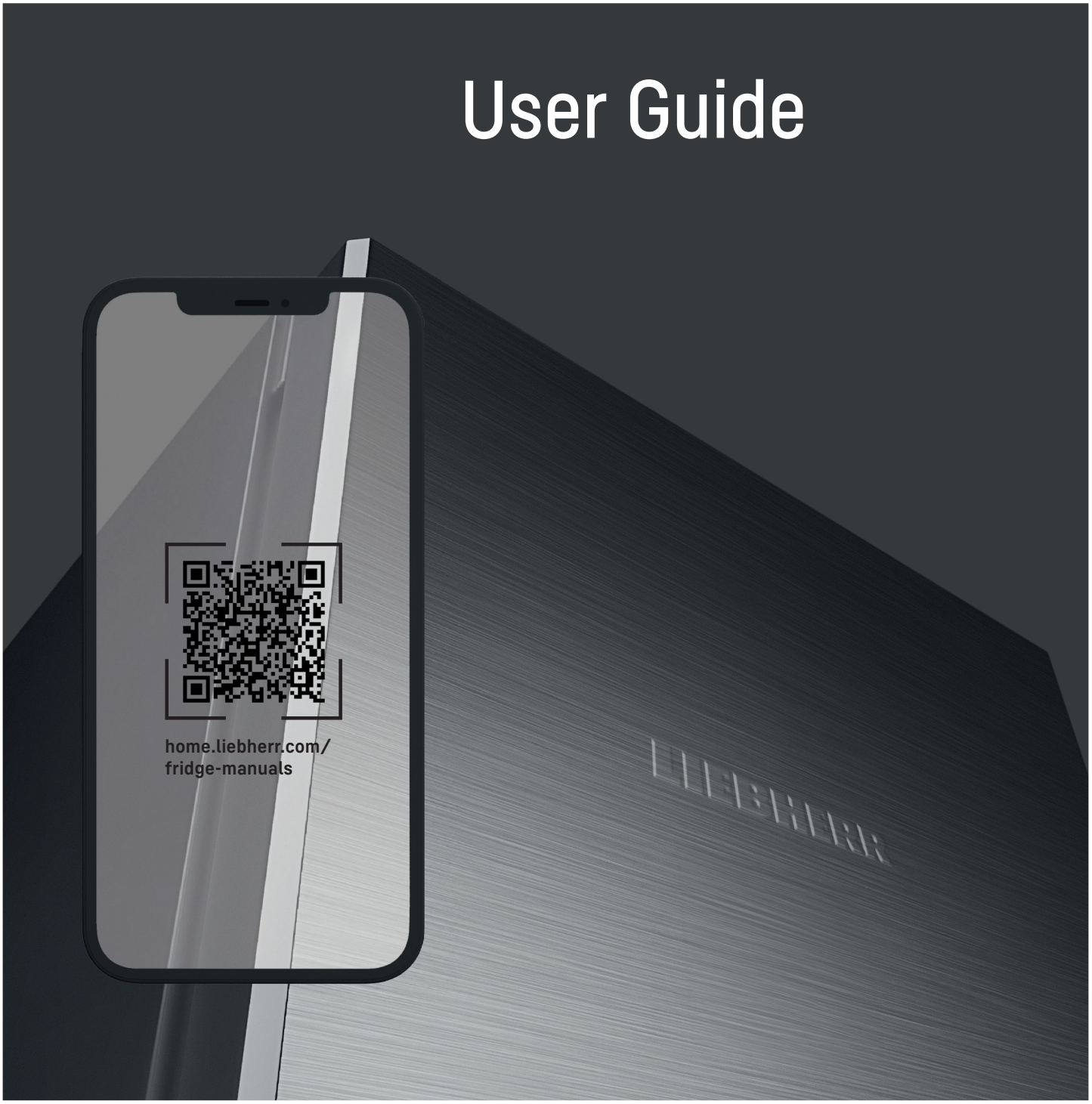

EN ORIGINAL OPERATOR'S MANUAL

LIEBHERR

Contents

1 General safety information 3
1.1 Intended use 3
1.2 Foreseeable erroneous use 3
1.3 User group 3
1.4 Warning notices – Risks for the user 3
1.5 Faults, damage and repairs 3
1.6 Information concerning disposal 4
1.7 Conformity 4
1.8 Climate classes 4
1.9 SVHC substances in accordance with the REACH Regulation 4
1.10 EPREL database 4
1.11 Open source licences 4
1.12 Spare parts 4
1.13 Warning levels 4

2 Appliance at a glance 5
2.1 Scope of delivery 5
2.2 Overview of the appliance and equipment 5
2.3 SmartDevice 5

3 Setting up and connecting 5
3.1 Installation requirements 5
3.2 Appliance dimensions 6
3.3 Ventilation requirements 6
3.4 Transporting the appliance 7
3.5 Unpacking the appliance 7
3.6 Removing the transport lock 7
3.7 Installing door handle* 7
3.8 Installing door handle* 7
3.9 Reversing the door opening direction 8
3.10 Aligning the door 16
3.11 Installing appliance 17
3.12 Setting up the appliance so it is level 17
3.13 Installing multiple appliances 17
3.14 After setting up 17
3.15 Connecting the appliance to the power supply 18
3.16 Disposing of packaging 18

4 Functionality of the Touch display 18
4.1 Navigation and symbol explanation 18
4.2 Menus 19
4.3 Sleep mode 19

5 Putting into operation 20
5.1 Switching on appliance (first use) 20

6 Storage 20
6.1 Information regarding storage 20
6.2 Storage sketches 20

7 Saving energy 25

8 Controls 25
8.1 Control and display elements 25
8.2 Appliance functions 26
8.2.1 Notes on the appliance functions 26
8.2.2 Switching appliance on and off 26
8.2.3 Temperature 27
8.2.4 Lighting intensity * 27
8.2.5 HumiditySelect * 27
8.2.6 HumidityControl * 28
8.2.7 SabbathMode 28
8.2.8 Display lock 29
8.2.9 Display PIN 30
8.2.10 Reminder 30
8.2.11 Language 31
8.2.12 Temperature unit 31
8.2.13 Display brightness 31
8.2.14 Alarm Sound 31
8.2.15 Key Sound 32
8.2.16 WiFi 32
8.2.17 Device information 33
8.2.18 Software 33
8.2.19 Door alarm 33
8.2.20 Demo mode 34
8.2.21 Resetting to factory settings 35
8.3 Messages 35
8.3.1 Warnings 35
8.3.2 Reminder 36

9 Features 37
9.1 Safety lock* 37
9.2 Wooden grid 37
9.3 Labels 38

10 Maintenance 38
10.1 FreshAir activated carbon filter 38
10.2 Cleaning the appliance 39

11 Customer help 39
11.1 Technical specifications 39
11.2 Operating noise 39
11.3 Technical fault 40
11.4 Customer Service 41
11.5 Model plate 41

12 Shutting down 41

13 Disposal 41
13.1 Preparing the appliance for disposal 41
13.2 Disposing of the appliance in an environmentally friendly manner 42

The manufacturer is continually working on the further development of all types and models. Please be aware that we reserve the right to make changes to the shape, equipment and technology.

Symbol	Explanation
	Read instructions Please read the information in these instructions carefully to understand all of the benefits of your new appliance.
	Additional information on the Internet The digital manual with additional information and in other languages can be found via the QR code on the front of the manual or by entering the service number at **home.liebherr.com/fridge-manuals**. The service number can be found on the serial tag: 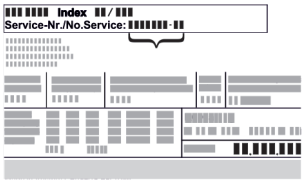 *Fig.* Example illustration
	Check appliance Check all parts for transport damage. If you have any complaints, please contact your agent or customer service.
	Differences These instructions apply to a range of models, so differences are possible. Sections that apply to certain models only are marked with an asterisk (*).
	Instructions and results Instructions are marked with a ▶. Results are marked with a ▷.

*** Depending on model and options**

Symbol	Explanation
	Videos Videos about the appliances are available on the YouTube channels of Liebherr-Hausgeräte.

Open source licences:

The appliance contains software components that use open source licences. Information on the open source licences used can be found here: **home.liebherr.com/open-source-licences**

This user information applies to the following appliances:

WPbl(i)	42.. / 46.. / 50.. / 52..
WSbl(i)	42.. / 46.. / 50.. / 52.. / 77..

1 General safety information

Keep this user information in a safe place so that you can refer to it at any time.

If you pass on the appliance, pass this user information on to subsequent owners.

To use the appliance properly and safely, read this user information carefully before installation and use. Always follow the instructions, safety instructions and warnings contained therein. They are important so that you can install and operate the appliance safely and properly.

1.1 Intended use

- This appliance is intended for household use and similar applications such as:
  - in staff kitchen areas in shops, offices and other work areas
  - in agriculture and by guests in hotels, motels and other accommodation
  - bed and breakfasts
  - in catering and similar wholesale operations
- Further uses:
  - This appliance is intended exclusively for storing wine.
  - This appliance is not suitable for freezing food.
  - All other types of application are impermissible.

1.2 Foreseeable erroneous use

The following applications are expressly prohibited:

- Storage and cooling of:
  - Chemically unstable, flammable or corrosive substances
  - Explosive substances, such as aerosol containers with flammable propellant gas
  - Medication, blood plasma, laboratory compounds or similar substances and products subject to the Medical Device Directive 2007/47/EC
- Use in explosive areas

Improper use of the appliance will result in damage or spoilage of the stored foods.

1.3 User group

- This appliance must not be used by persons (including children) with reduced physical, sensory or mental capabilities, or by persons with a lack of experience and knowledge, unless they are supervised by a person responsible for their safety or have been given instructions on how to use the appliance. Children must be supervised to ensure that they do not play with the appliance.
- Children aged between 3 and 8 are allowed to load and unload the fridge-freezer.

1.4 Warning notices – Risks for the user

- WARNING: Keep ventilation openings in the equipment housing or in installations clear of obstructions.
- WARNING: Do not use any mechanical devices or other means to speed up the defrosting process other than those recommended by the manufacturer.
- WARNING: Do not damage the coolant circuit.
- WARNING: Do not operate electrical appliances inside the refrigerator/freezer compartment that are not of the type recommended by the manufacturer.
- WARNING: When installing the appliance, ensure that the mains lead is not trapped or damaged.
- WARNING: Do not place portable multiple sockets or power supply units at the rear of the appliance.

Once the appliance has been installed, it must still be possible to disconnect it from the mains.

- Accessible mains plug (above, below or next to the appliance)
- Tripping of the fuse in the building's electrical installation in accordance with the installation regulations.

WARNING: Fire hazard/flammable substances.

The symbol is located on the compressor and may also appear in other places on the appliance. It marks the danger posed by flammable substances. Do not remove the sticker.

- The more refrigerant there is in the appliance, the larger than room must be in which it is located. In rooms that are too small, a leak can product a flammable gas/air mixture. For every 8 g of refrigerant, the installation room must be at least 1 m^3 in size. Information on the refrigerant contained is given on the type plate inside the appliance.
- Clean regularly surfaces that can come in contact with food and accessible drainage systems.
- Package raw meat or fish in clean, closed containers. This will prevent meat or fish from touching or dripping onto other food.
- If the fridge-freezer is left empty for a long period, switch it off, defrost it, clean it, dry it and leave the door open to prevent mould from forming.
- Avoid prolonged skin contact with cold surfaces or with cold food. Use gloves for protection, for example.
- Alcoholic beverages and other containers bearing alcohol must be sealed tight for storage. Any leaking alcohol may ignite due to electrical parts.
- Only open the door for a short time. This prevents the temperature inside the appliance from rising.
- Do not reach between the door and the appliance when opening and closing. Fingers may become trapped.
- WARNING: This appliance must be secured in accordance with the instruction manual to prevent any risks arising from a lack of stability.
- Follow the instructions for installation and connection. (see 3 Setting up and connecting)

1.5 Faults, damage and repairs

- Mains connection with cooling appliance plug:
  If the mains lead of this appliance is damaged, it must be replaced with a special connection line available from the

manufacturer or its customer service department. The customer may make the change.
- Repairs and interventions on the appliance may only be carried out by the customer service or by other qualified personnel trained for this purpose.
- In the event of malfunctions and appliance faults, pull out the mains plug or switch off the fuse. Always hold the plug when pulling out the mains plug. Never tug on the cable.

1.6 Information concerning disposal

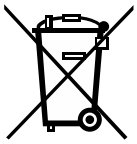

The crossed-out rubbish bin symbol is a note that the appliance must not be disposed of with unsorted household waste and must be placed in a separate collection. It contains recyclable materials and may be reusable.

The symbol may be found on the compressor. It pertains to the oil in the compressor and indicates the following danger: **Can be fatal if swallowed or with penetration of the respiratory tract.** This information is only significant for recycling. No risk exists with normal use.

This or a similar sticker may be on the rear of the appliance. It indicates that there are vacuum insulation panels (VIP) or perlite panels in the door and/or housing. This information is only significant for recycling. Do not remove the sticker.

- The old appliance must be properly and therefore professionally disposed of in accordance with the local applicable regulations and legislation. When transporting the old appliance do not damage the refrigerant circuit, so that the refrigerant inside (information on the type plate) and the oil do not leak out uncontrolled.
- Please note that it is the customer's responsibility to delete any personal data that may be held.
- For Germany: The appliance can be disposed of free of charge via the class 1 collection containers at the local recycling/reusable material centres. When purchasing a new refrigerator/freezer and a sales area > 400 m^2, the old appliance is also taken back free of charge via the trade.
- EU: Please check with your local authorities to find out how to dispose of old appliances.

1.7 Conformity

The coolant circuit has been tested for leak-tightness. The appliance complies with the relevant safety regulations and directives.

For the EU market:	The appliance complies with Directive 2014/53/EU.
For GB market:	The appliance complies with the Radio Equipment Regulations 2017 SI 2017 No. 1206.

The full text of the EU Declaration of Conformity is available at the following web address: www.liebherr.com

1.8 Climate classes

Depending on its climate class, the appliance is designed for operation within certain ambient temperature limits. The climate class for your appliance is printed on the type plate.

Note

▶ In order to guarantee fault-free operation comply with the specified ambient temperatures.

Climate class	for ambient temperatures from
SN	10 °C to 32 °C
N	16 °C to 32 °C
ST	16 °C to 38 °C
T	16 °C to 43 °C
SN-ST	10 °C to 38 °C
SN-T	10 °C to 43 °C

1.9 SVHC substances in accordance with the REACH Regulation

- You can use the following link to check whether your appliance contains SVHC substances in accordance with the REACH Regulation: https://go.liebherr.com/z3eewm

1.10 EPREL database

- From 1 March 2021, the information on energy labelling and eco-design requirements will be available in the European product database (EPREL). The product database can be accessed via the following link https://eprel.ec.europa.eu/. Here, you are asked to enter the model identifier. You will find the model identifier on the type plate.

1.11 Open source licences

- The appliance contains software components that use open source licences. Information on the open source licences used can be found here: home.liebherr.com/open-source-licences

1.12 Spare parts

- The spare parts availability for functional parts and stockable parts of the equipment is 15 years.

1.13 Warning levels

DANGER	Identifies an immediately dangerous situation that will result in death or serious bodily injuries if it is not prevented.
WARNING	Identifies a dangerous situation that could result in death or serious bodily injury if it is not prevented.
CAUTION	Identifies an immediately dangerous situation that could result in slight or moderate injuries if it is not prevented.
ATTENTION	Identifies a hazardous situation that could result in property damage if it is not prevented.
Note	Identifies useful information and tips.

*** Depending on model and options**

2 Appliance at a glance

2.1 Scope of delivery

Check all parts for transport damage. Contact your dealer or customer service in the event of complaints. (see 11.4 Customer Service)

Your new appliance comes with the following parts:

- Standalone appliance
- Features (depending on the model)
- Installation materials (depending on the model)
- “Quick Start Guide”
- “Installation Guide”*
- Service Brochure

2.2 Overview of the appliance and equipment

WPbl 42.. / 46.. / 50..
WPbli 50.. / 52..

WSbl 42.. / 46.. / 50..
WSbli 50.. / 52.. / 77..

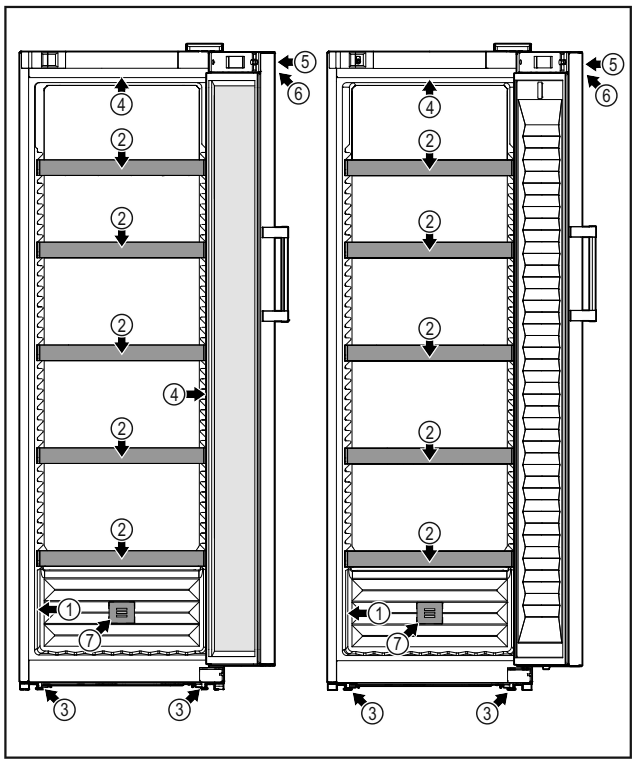

Fig. 1 Example illustration

(1) Serial tag
(2) Bottle shelf
(3) Adjustable foot
(4) Interior lighting*
(5) Lock
(6) Control elements and temperature display
(7) FreshAir activated charcoal filter

2.3 SmartDevice

SmartDevice is the networking solution for your wine storage cabinet.

If your appliance SmartDevice-enabled or compatible, you can quickly and easily connect your appliance to your WiFi. With the SmartDevice app, you can operate your appliance from a mobile device. Additional functions and setting options are available in the SmartDevice SmartDevice app.

SmartDevice-enabled appliance:*	Your appliance is capable of being a SmartDevice. To be able to connect your device to WiFi, you need to download the SmartDevice app.*
SmartDevice-compatible appliance:*	Your appliance is compatible for use with the SmartDeviceBox. You must first purchase and install the SmartDeviceBox. In order to connect your appliance to the WiFi, you need to download the SmartDevice app.*
More information about SmartDevice:	**smartdevice.liebherr.com**
Purchasing the SmartDeviceBox in the Liebherr-Hausgeräte store:*	**home.liebherr.com/shop/de/deu/smartdevicebox.html***
Downloading the SmartDevice app:	After installing and configuring the SmartDevice app, you can connect your appliance to your Wi-Fi (see 8.2.16 WiFi) using the SmartDevice app and the appliance's Wi-Fi function.

Note
The SmartDevice function is not available in the following countries: Russia, Belarus, Kazakhstan.

You cannot use the SmartDeviceBox.*

3 Setting up and connecting

3.1 Installation requirements

The installation conditions are crucial to ensure that you can operate your appliance safely, efficiently and without problems.

- Observe all safety instructions.
- Consider the location and position in the room.

WARNING
Danger of fire due to incorrect positioning!

▶ Make sure the mains cable is not trapped under the appliance when you position the appliance.
▶ Position the appliance so that it does not touch the plug or mains cable.
▶ Do not connect any appliances to sockets in the area of the back of the appliance.
▶ Do **not** place and operate multi-sockets/power distributors and other electronic devices (such as halogen transformers) at the back of the appliances.

WARNING
Fire hazard due to dampness!
If live parts or the mains lead become damp this may cause short circuits.
▶ The appliance is designed for use in enclosed areas. Do not operate the appliance outdoors or in areas where it is exposed to splash water or damp conditions.

WARNING
Risk of fire due to leaking refrigerant and oil!
The refrigerant inside the appliance is environmentally friendly, but flammable. The oil it contains is also flammable. Escaping refrigerant and oil can ignite in high concentrations and in contact with an external heat source.
▶ Do not damage the refrigerant circuit pipes or the compressor.

3.1.1 Installation site

- Only set up and use the appliance in enclosed spaces.
- A dry and well-ventilated room is an optimum installation location.
- If the appliance is installed in a very damp environment, condensation may form on the appliance exterior. Always make sure there is good ventilation and aeration at the installation site.
- The more refrigerant there is in the appliance, the larger than room must be in which it is located. In rooms that are too small, a leak can product a flammable gas/air mixture. For every 8 g of refrigerant, the installation room must be at least 1 m^3 in size. Information on the refrigerant contained is given on the type plate inside the appliance.
- The floor on which the appliance stands must be horizontal and level.

3.1.2 Position in space

- Do not place the appliance in direct sunlight or near radiators or similar sources of heat.
- You can place the appliance directly next to an oven.
- If the appliance is placed directly next to an oven, the energy consumption may increase slightly. This is dependent on the service life and usage intensity of the oven.
- Always position the appliance with the rear directly on the wall.
- Use in hazardous areas is not permitted.

3.2 Appliance dimensions

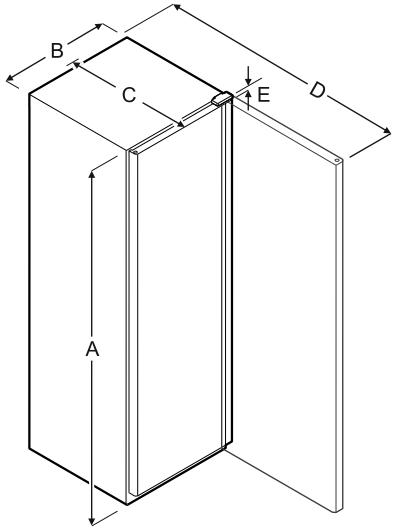

	A	B	C	D	E
WPbl 4201 WSbl 4201	1284 mm	600 mm	763 mm	1323 mm	23 mm
WPbl 4601 WSbl 4601	1484 mm	600 mm	763 mm	1323 mm	23 mm
WPbl 5001 WPbli 5031 WSbl 5001 WSbli 5031	1684 mm	600 mm	763 mm	1323 mm	23 mm
WPbl 5231 WPbli 5231 WSbli 5231	1884 mm	600 mm	763 mm	1323 mm	23 mm
WSbl 7731 WSbli 7731	2044 mm	750 mm	763 mm	1473 mm	23 mm

A = appliance height including feet/castors/hinges
B = appliance width without handle
C = appliance depth without handle
D = appliance depth with door open
E = hinge height

3.3 Ventilation requirements

NOTICE
Danger of overheating due to insufficient air ventilation!
The compressor may be damaged if there is insufficient air ventilation.
▶ Take care to ensure adequate air ventilation.
▶ Observe the ventilation requirements.

3.4 Transporting the appliance

WARNING
Risk of injury due to broken glass!*
When transporting at an altitude of more than 1500 m, the glass panes of the door may break. This can result in sharp-edged fragments, which can cause serious injuries.
▶ Take appropriate protective action.

3.4.1 Transporting the appliance for initial use

Ensure that the following requirements are met:

- ❑ The appliance is packaged.
- ❑ The appliance is upright.

▶ Transport the appliance with the help of two people.
▶ Unpacking the appliance. (see 3.5 Unpacking the appliance)

3.4.2 Transporting the appliance after initial use

Observe the following instructions if you wish to transport or move the appliance again after initial use.

Ensure that the following requirements are met:

- ❑ The appliance is emptied.
- ❑ The appliance is upright.
- ❑ Appliance with door(s): Door is secured against accidental opening.
- ❑ Appliance with telescopic unit: The telescopic unit is secured against accidental opening.
- ❑ Appliance with adjustable feet: Adjustable feet are screwed in.

▶ Transport the appliance with the help of two people.

After transport:
▶ Unscrew the adjustable feet on the appliance.
▶ Align the appliance.

3.5 Unpacking the appliance

▶ Check the appliance and packaging: If you suspect that the goods have been damaged in transit, please contact the supplier before connecting them.

NOTICE
Damage to property caused by pointed or sharp objects!
Using pointed or sharp objects when removing packaging material may damage the appliance.
▶ Do not use any pointed or sharp objects to remove the packaging material.

▶ Remove the packaging materials.
▶ The appliance is positioned correctly: Remove the protective film from the door and side panels.

3.6 Removing the transport lock

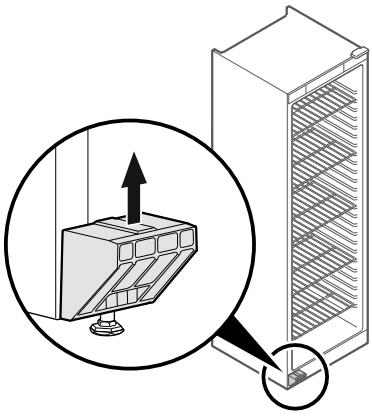

Fig. 2
▶ Pull the transport lock upwards.
▷ Base holder remains on the appliance.

3.7 Installing door handle*

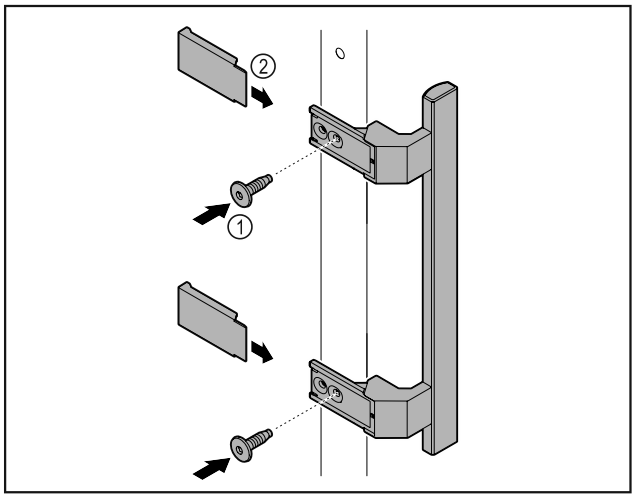

Fig. 3
▶ Attach handle from accessory kit to the door using the screws supplied *Fig. 3 (1)*.
▶ Put on cover *Fig. 3 (2)*.
▶ Insert the plug from the accessory pack on the opposite side. *

3.8 Installing door handle*

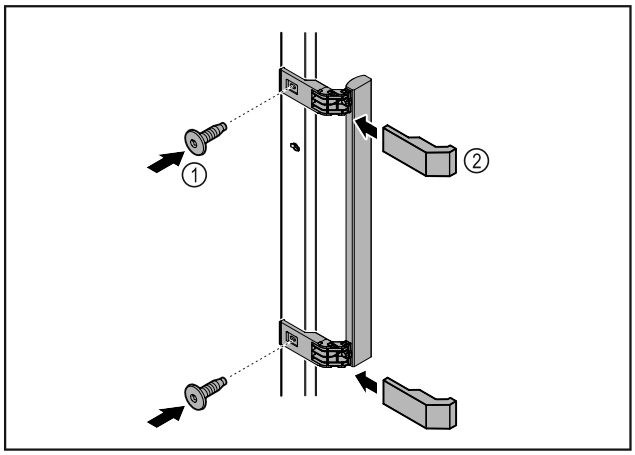

Fig. 4
▶ Attach handle from accessory kit to the door using the screws supplied *Fig. 4 (1)*.

▶ Put on cover *Fig. 4 (2)*.
▶ Insert the plug from the accessory pack on the opposite side. *

3.9 Reversing the door opening direction

Tools

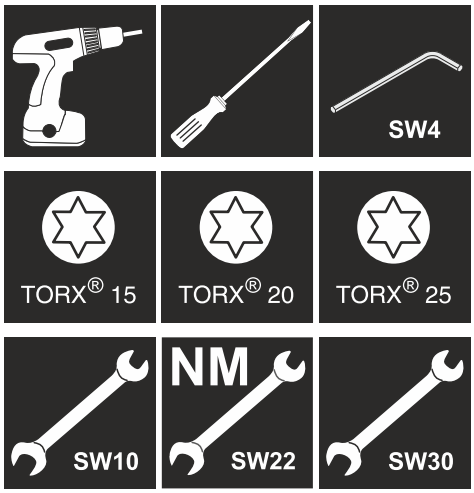

WARNING
Risk of injury if the door is not reversed correctly!
▶ Replace the door hinge with specialist personnel.

WARNING
Risk of injury and material damage due to heavy door!
▶ Only perform the conversion if you can carry a weight of 25 kg.
▶ Always have someone help you carry out the conversion.

NOTICE
Live parts!
Damage to electrical components.
▶ Remove the mains plug before you reverse the door.

▶ Open the door.

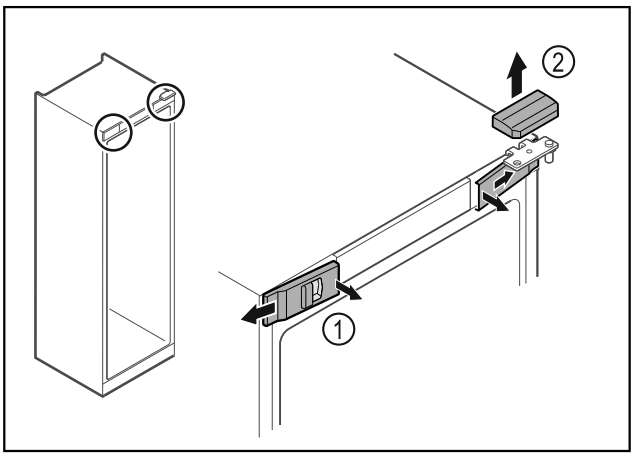

Fig. 5 *
▶ Unlatch the front covers *Fig. 5 (1)* on the inside and remove them sideways.*
▶ Lift off the upper cover *Fig. 5 (2)*.*

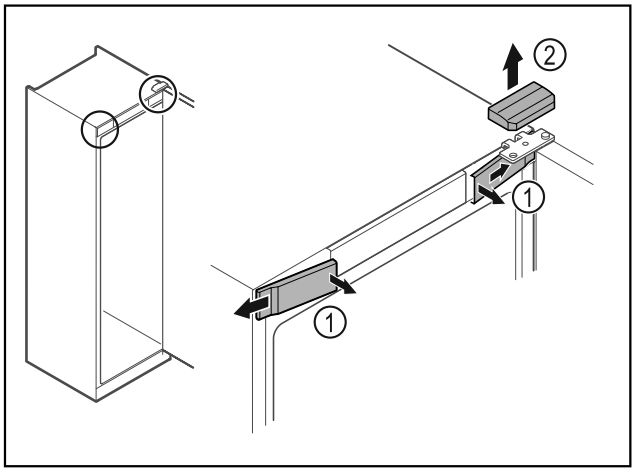

Fig. 6 *
▶ Unlatch the front covers *Fig. 6 (1)* on the inside and remove them sideways.*
▶ Lift off the upper cover *Fig. 6 (2)*.*

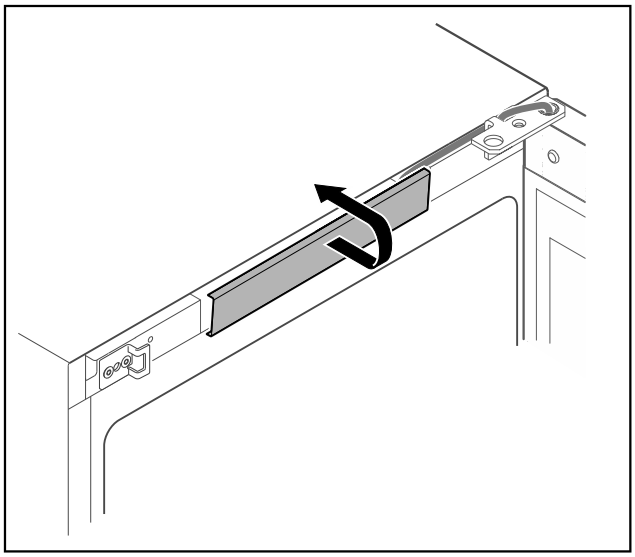

Fig. 7
▶ Unlatch the middle cover and remove it.

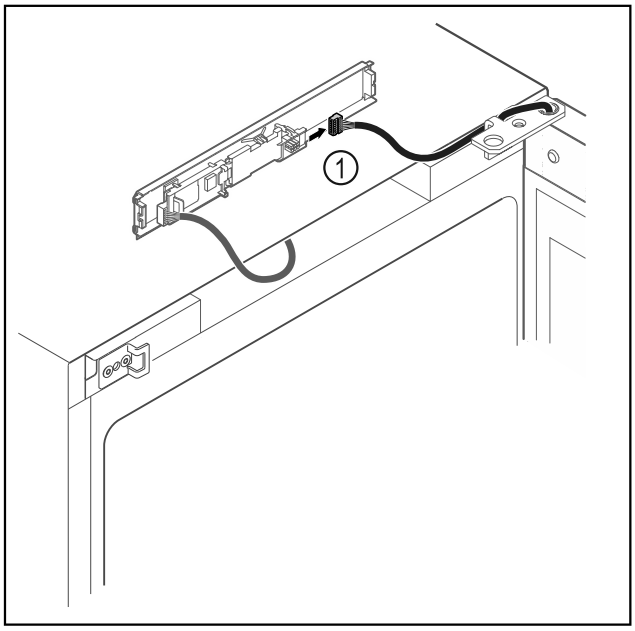

Fig. 8
▶ Disconnect the plug *Fig. 8 (1)* from the circuit board.

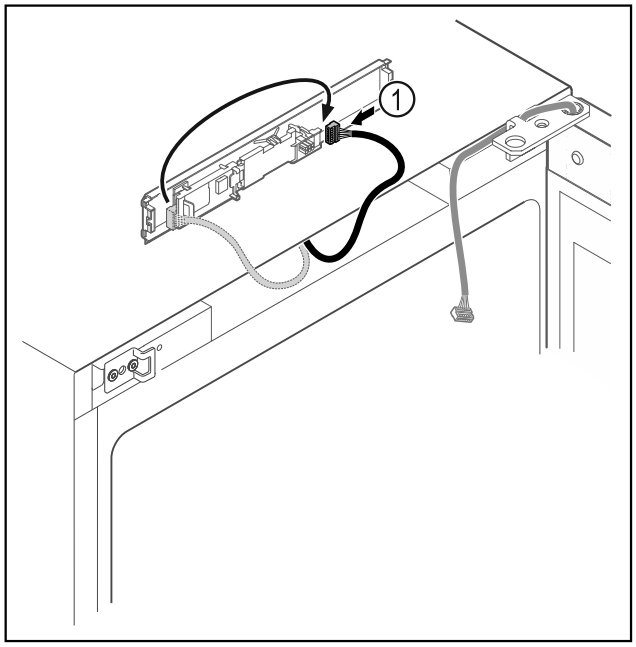

Fig. 9

▶ Connect the plug *Fig. 9 (1)* to the circuit board.

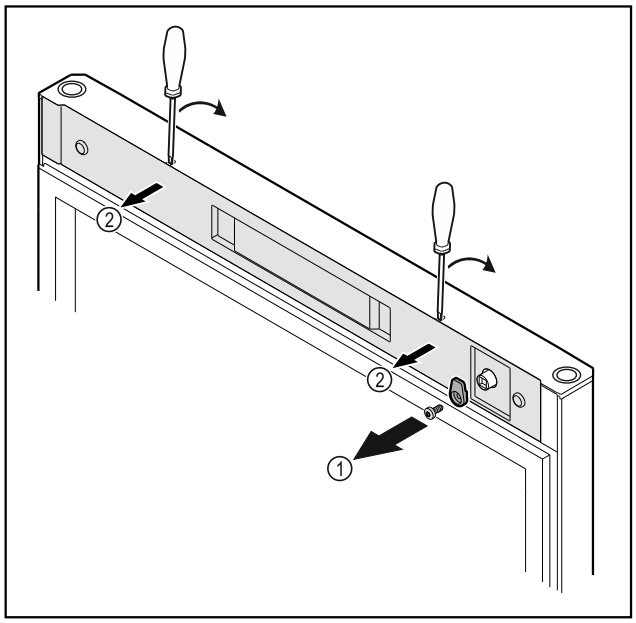

Fig. 10 *

▶ Unscrew the door latch *Fig. 10 (1)*.*

▶ Unlatch the cover *Fig. 10 (2)* with a small screwdriver and remove it.*

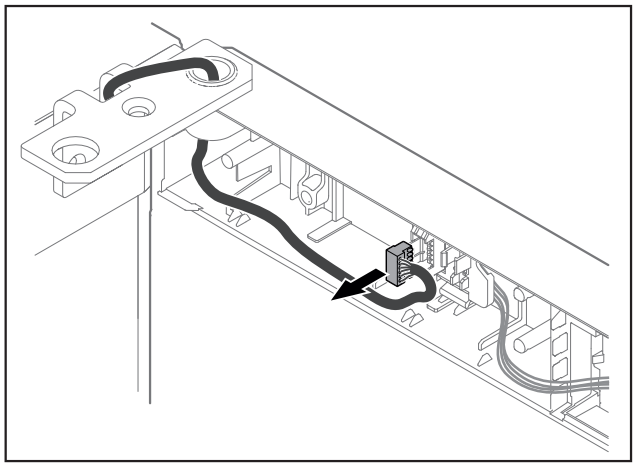

Fig. 11

▶ Remove the plug from the plug holder.

-or-

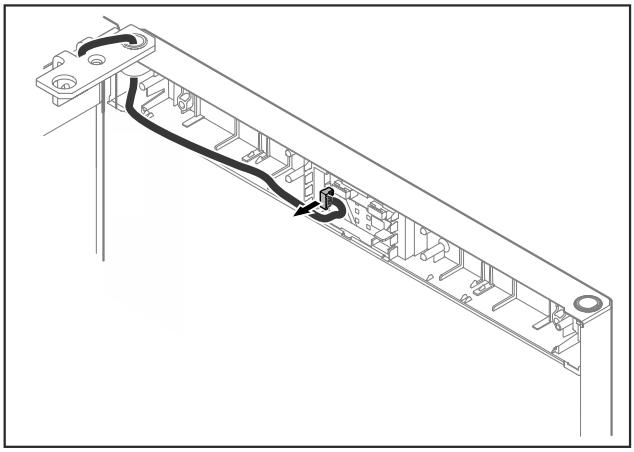

Fig. 12

▶ Remove the plug from the circuit board.

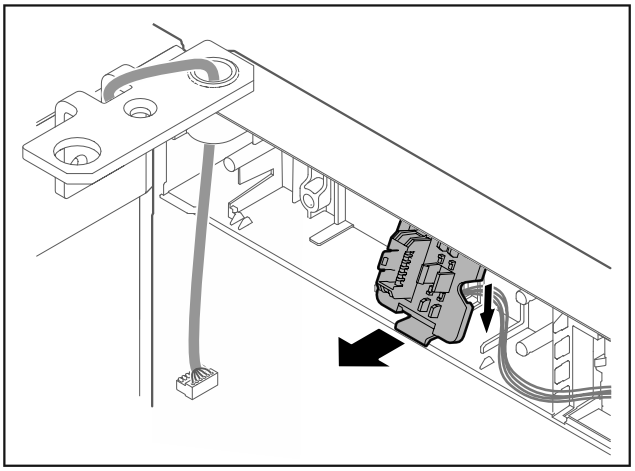

*Fig. 13 The installation position for the plug holder can be rotated by 180°.**

▶ Unlatch the plug holder.*

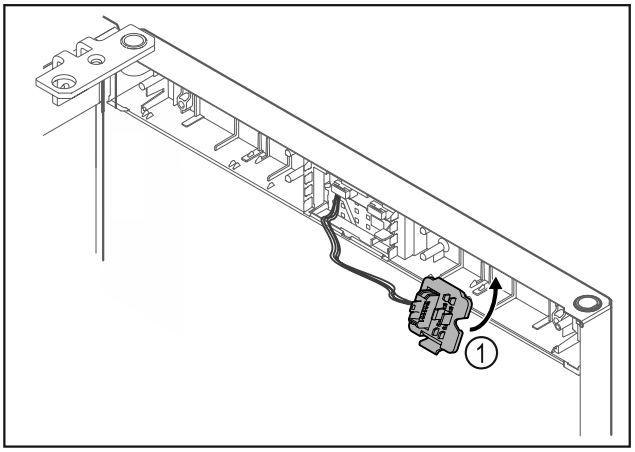

Fig. 14

▶ Engage the plug holder *Fig. 14 (1)* on the opposite side.*

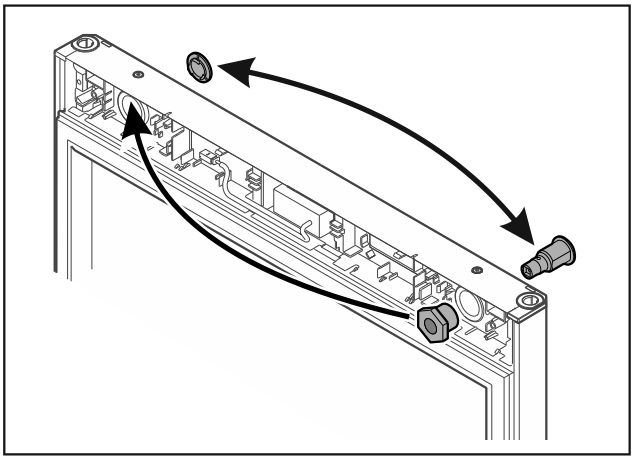

Fig. 15 *

▶ Put the lock and cover on the opposite side.*

-or-

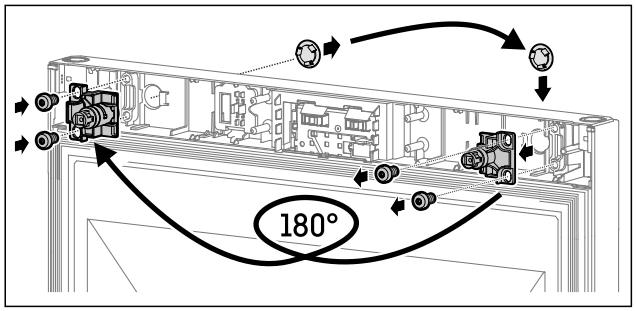

Fig. 16

▶ Put the lock and cover on the opposite side.*

NOTICE

Risk of injury if the door tips out!

▶ Hold the door.

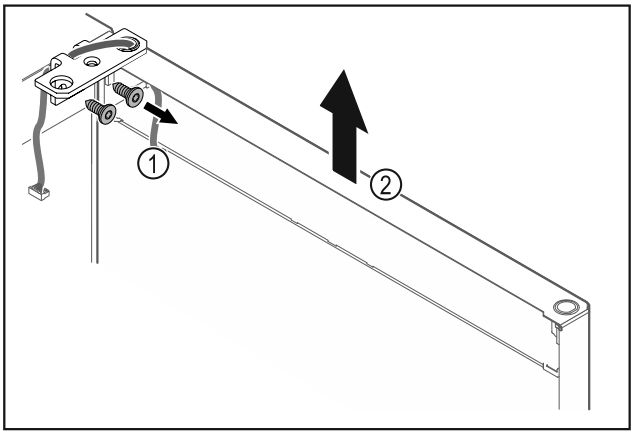

Fig. 17

▶ Unscrew the hinge *Fig. 17 (1)*.

▶ Lift the door with the hinge straight up by *Fig. 17 (2)* roughly 200 mm and take it off.

▶ Carefully place the door on a soft surface.

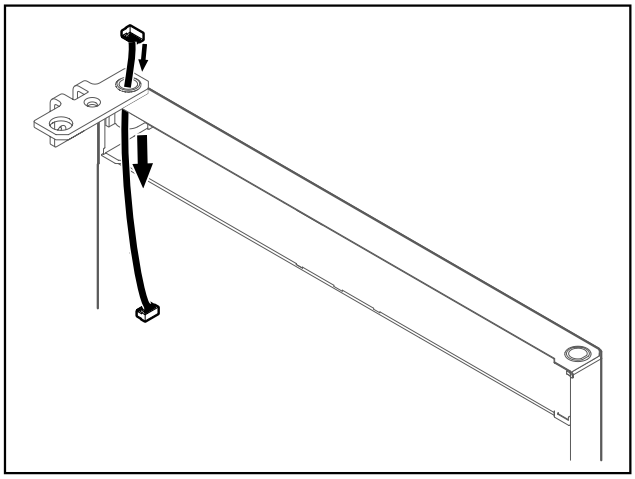

Fig. 18

▶ Carefully pull out the cable.

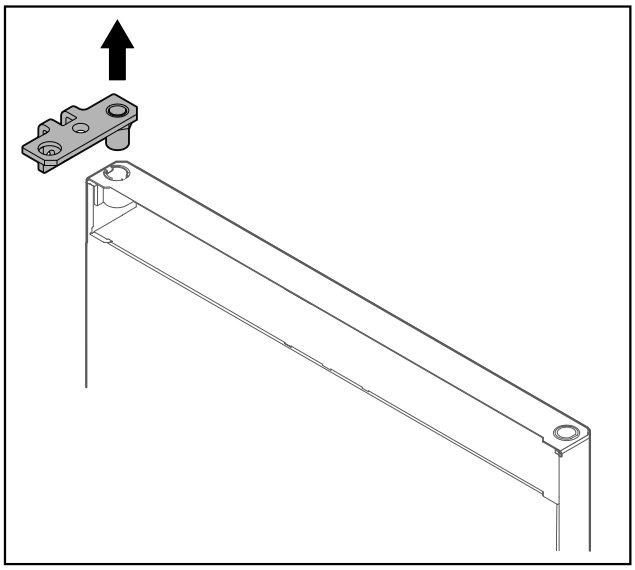

Fig. 19

▶ Pull out the hinge.

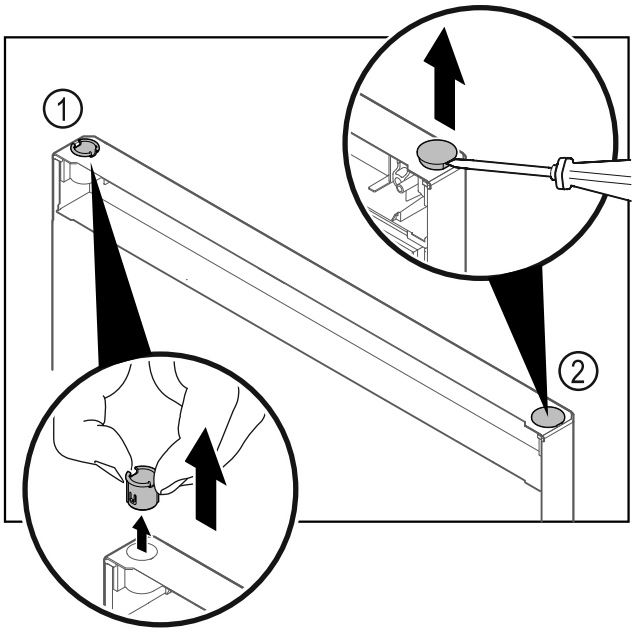

Fig. 20

▶ Pull out the hinge bushing *Fig. 20 (1)* with your fingers.

▶ Carefully lift the cover plug *Fig. 20 (2)* with a slotted screwdriver and pull it out.

*** Depending on model and options**

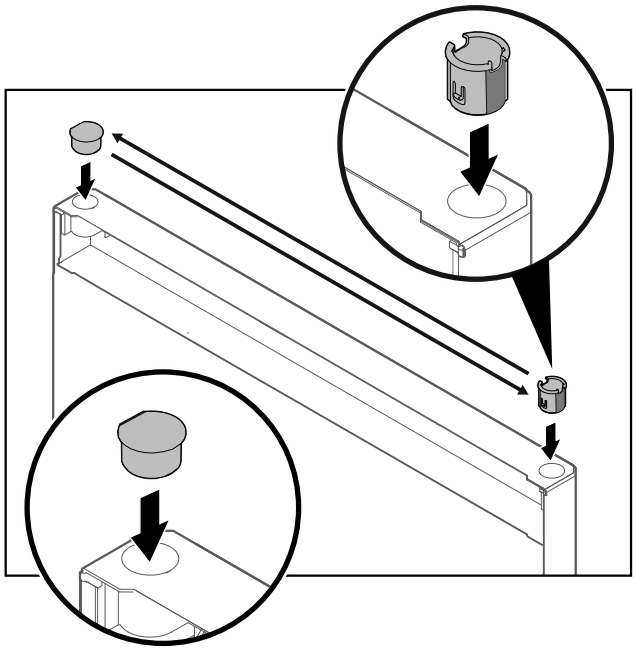

Fig. 21

▶ Insert hinge bushing and cover plug on the opposite side (the flattened sides face outwards).

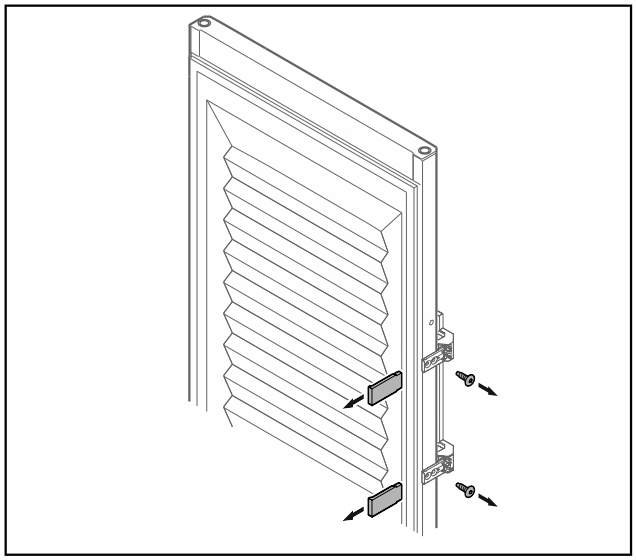

*Fig. 22 Insulated door**

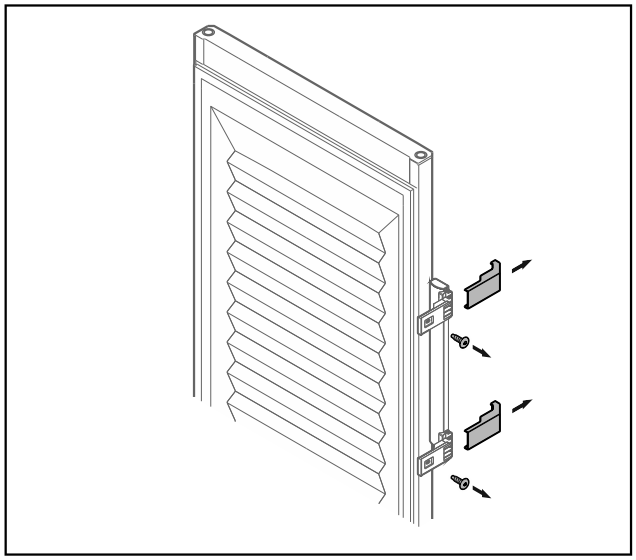

*Fig. 22 Insulated door**

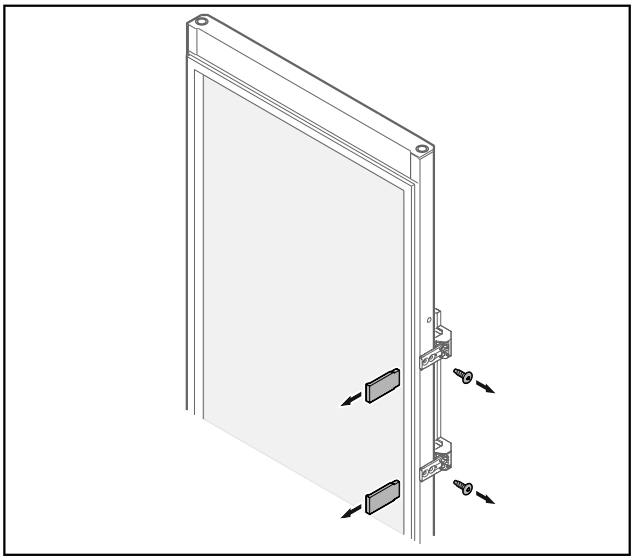

*Fig. 23 Glass door**

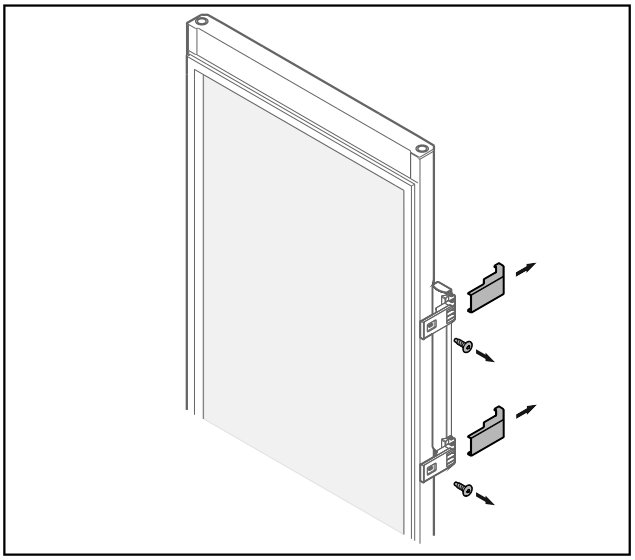

*Fig. 23 Glass door**

▶ Remove the panels.
▶ Unscrew the handle.

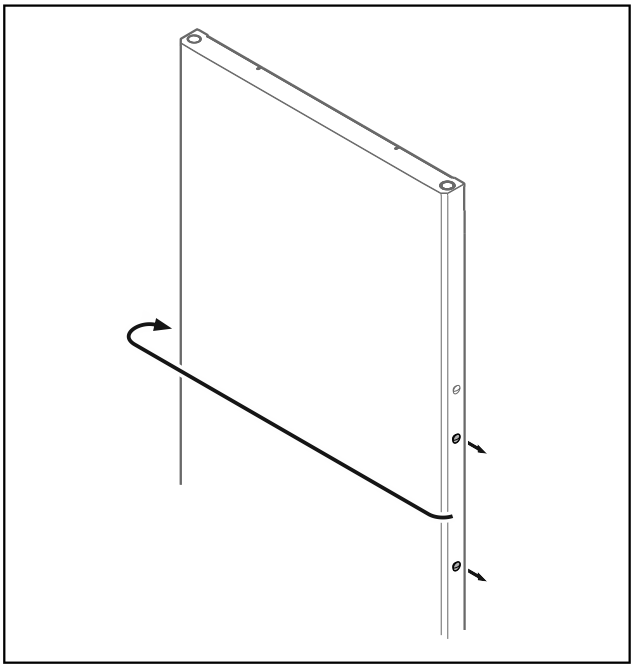

Fig. 24

▶ Put the stopper on the opposite side.

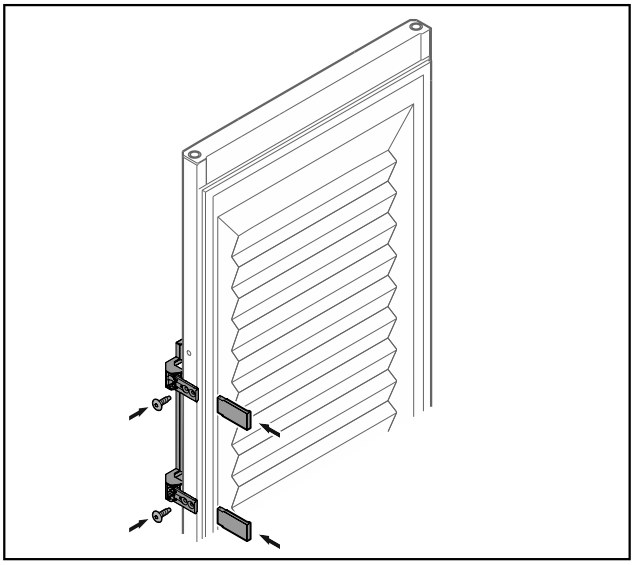

*Fig. 25 Insulated door**

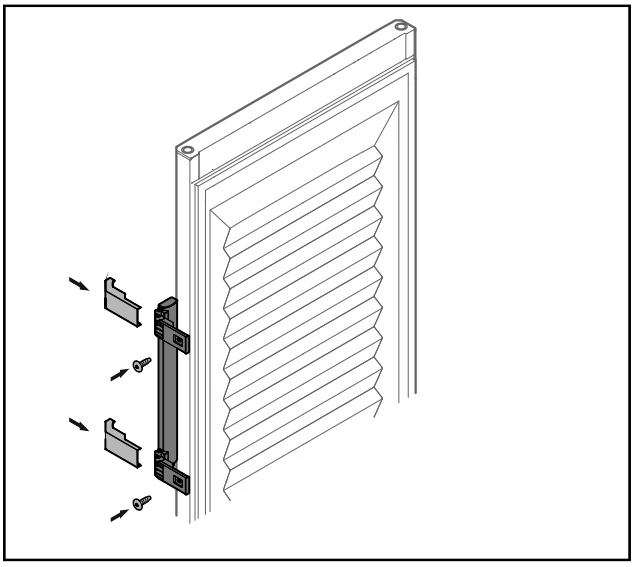

*Fig. 25 Insulated door**

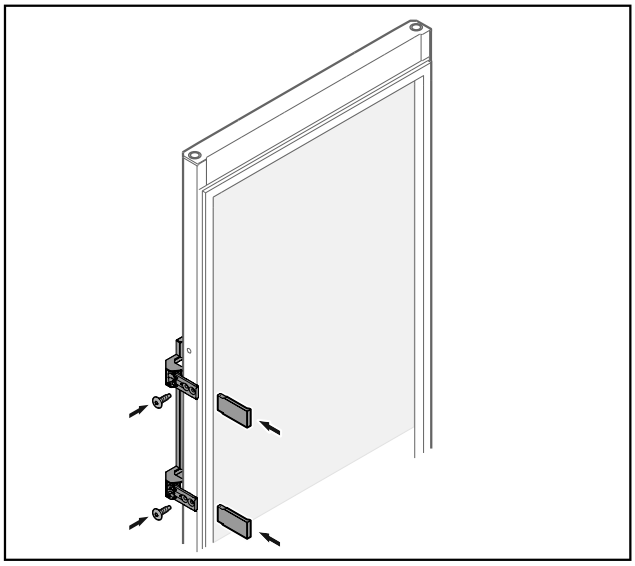

*Fig. 26 Glass door**

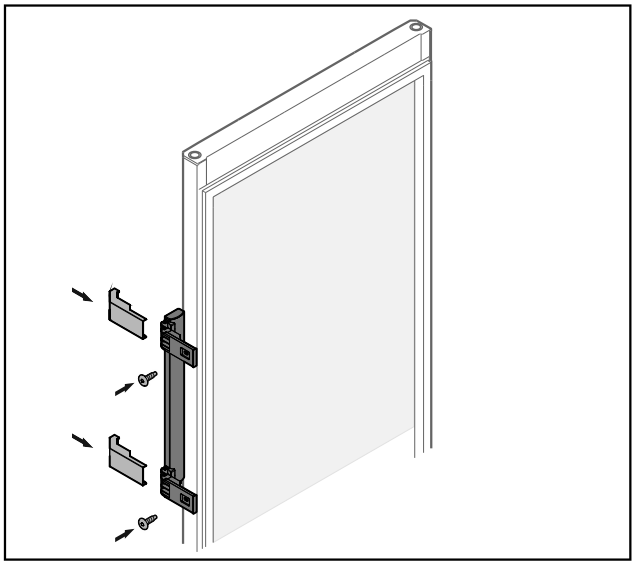

*Fig. 26 Glass door**

▶ Screw the handle onto the opposite side.

▶ Attach the panels.

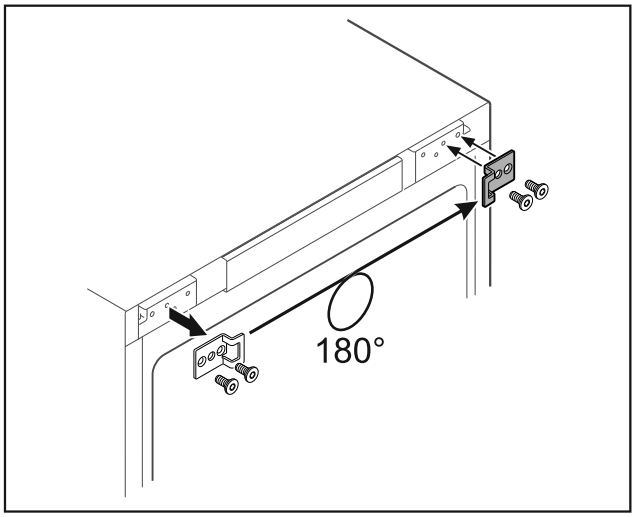

*Fig. 27 **

▶ Put the closing bracket on the opposite side.*

*** Depending on model and options**

Note
The holes are pre-marked and must be pierced with the self-tapping screws.*

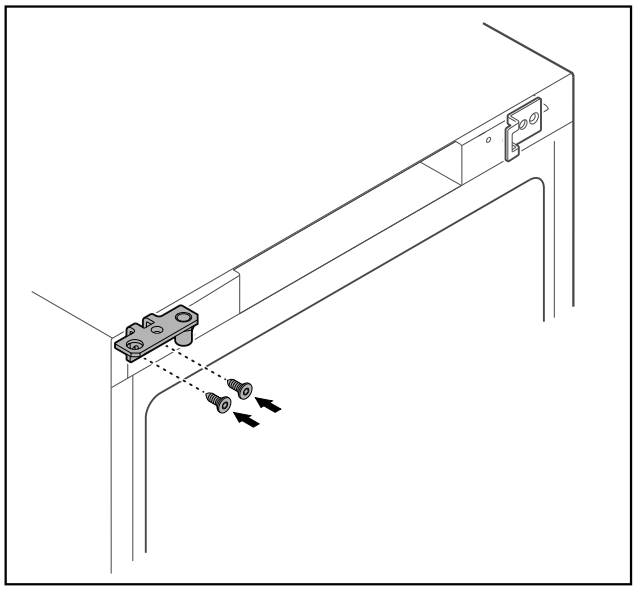

*Fig. 28 **

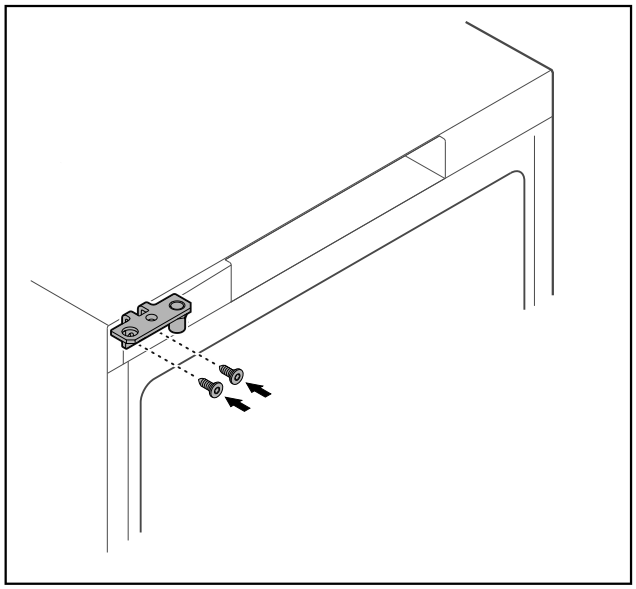

*Fig. 29 **

▶ Move the hinge to the opposite side.

WARNING
Risk of injury and material damage if the door tips out!
▶ Tighten the bearing pins to the specified torque.

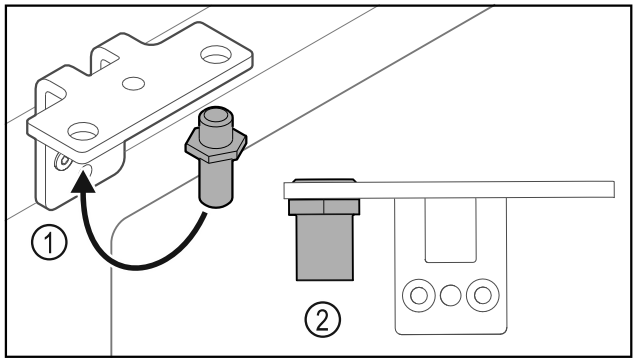

Fig. 30

▶ Put the pin back into the hinge *Fig. 30 (1)*.
▶ Tighten the pin *Fig. 30 (2)* to a **torque of 12 Nm**.
▶ Unscrew the hinge again.

NOTICE
Risk of injury due to tensioned spring!
▶ Do not disassemble the door closing system *Fig. 31 (1)*.

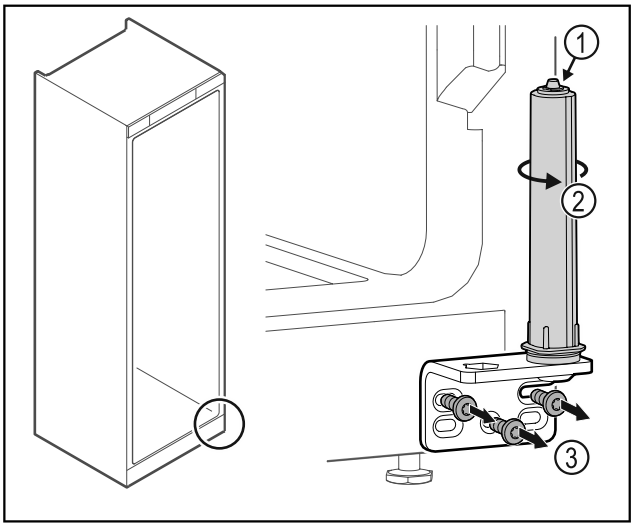

Fig. 31

▶ Turn the closing system *Fig. 31 (2)* until it clicks.
▷ The tension of the closing system is released.
▶ Unscrew the hinge *Fig. 31 (3)*.

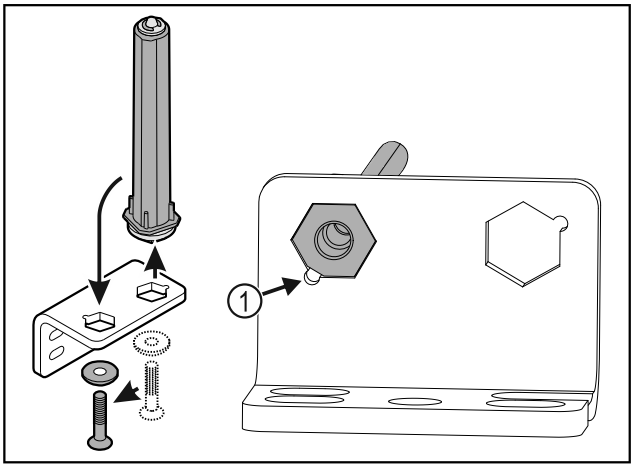

Fig. 32

▶ Put the door closing system in the hinge.
▶ Make sure the pin chamfer *Fig. 32 (1)* faces the round hole when you put it in.

-or-

Note
Incorrect alignment of the height adjustment washers.
Nuts no longer have sufficient hold.
▶ The washer must lock into the underside of the closing system.

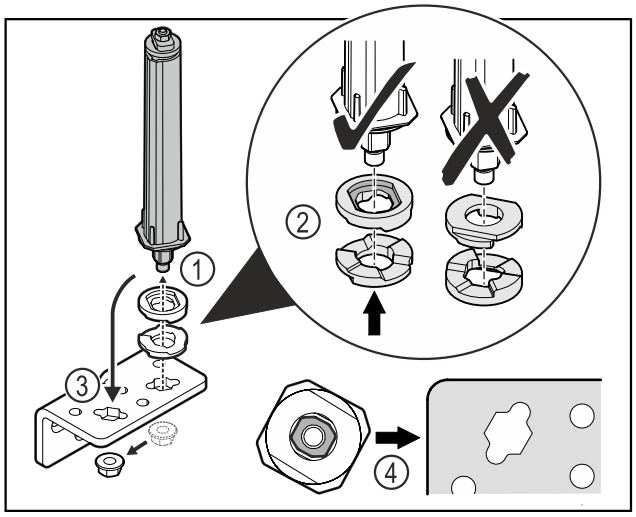

Fig. 33

▶ Loosen the nut and remove the door closing system *Fig. 33 (1)*.

▶ Observe the correct alignment of the height adjustment washers *Fig. 33 (2)*.
▶ Put the door closing system in the hinge and fix in place with the nut *Fig. 33 (3)*.
▶ Observe the correct alignment of the door closing system when doing so *Fig. 33 (4)*.

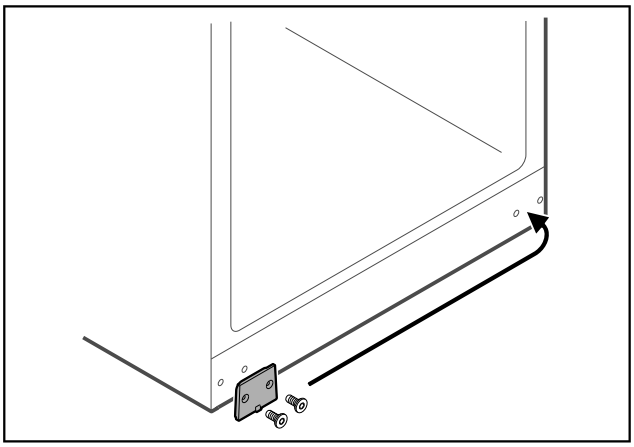

Fig. 34

▶ Put the cover plate on the opposite side.

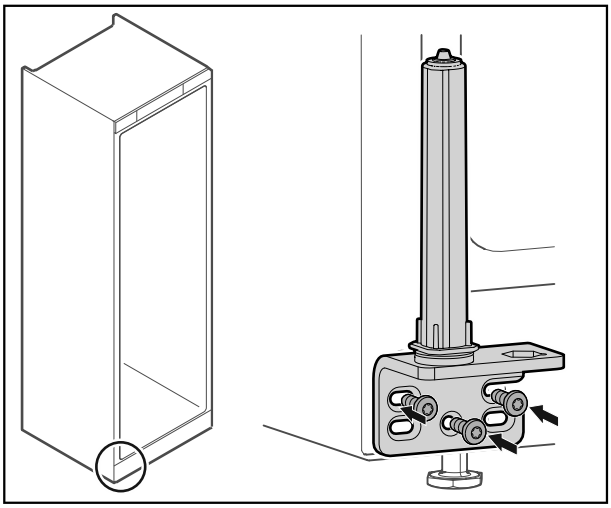

Fig. 35

▶ Screw the hinge onto the opposite side.

Note
Correct alignment and tension are important for the closing system to work properly.

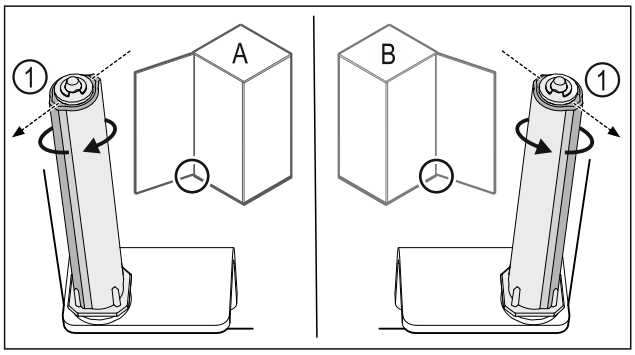

*Fig. 36 Left-hinged (**A**) / Right-hinged (**B**)*

▶ Turn the closing system against the resistance until the bar of the closing system *Fig. 36 (1)* points outwards.
▷ The closing system automatically stays in this position.
▷ The closing system is now aligned and tensioned.

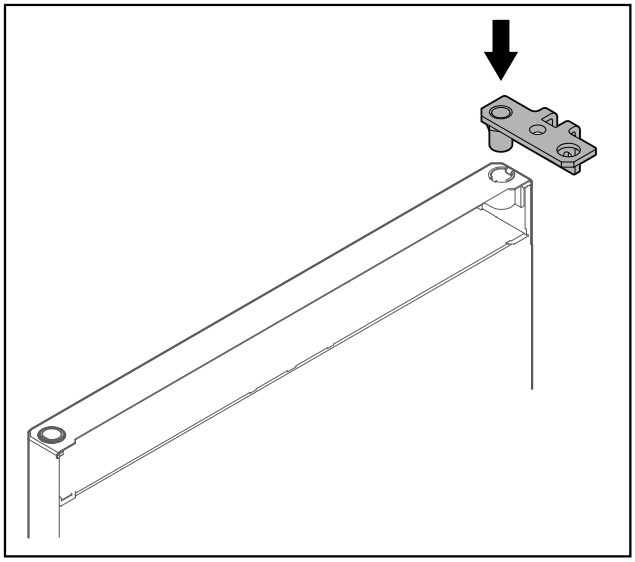

Fig. 37

▶ Put the hinge into the door.

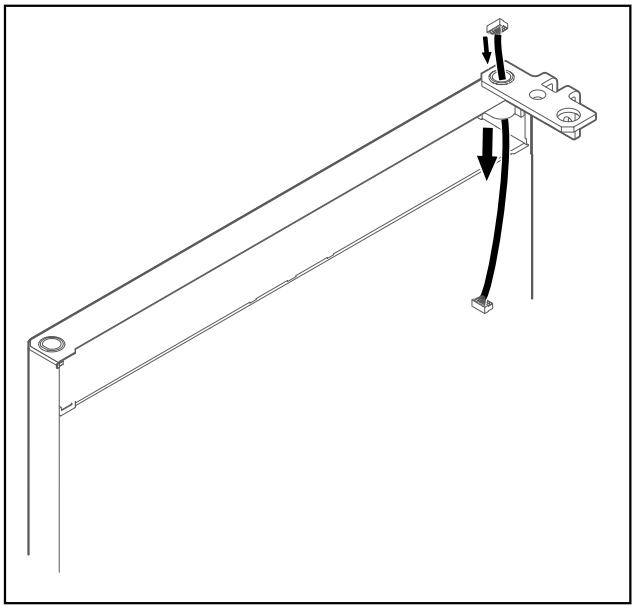

Fig. 38

▶ Carefully push the cable through.

NOTICE
Risk of injury if the door tips out!
▶ Hold the door.

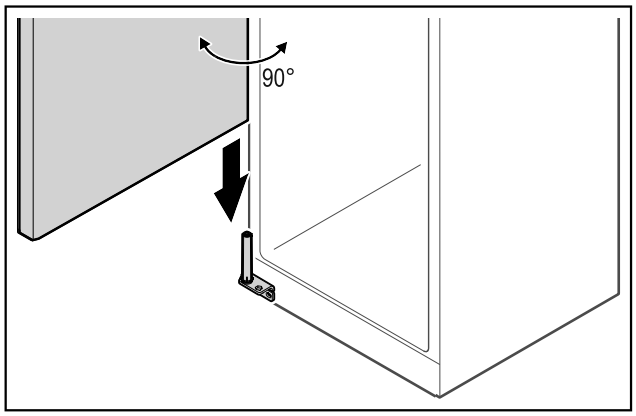

Fig. 39
▶ Together with a second person, lift the door from the ground.
▶ Carefully put the door on the closing system with the door opened at a 90° angle.

NOTICE
Material damage due to incorrect mounting!
▶ Do not pinch the cable when mounting the hinge.

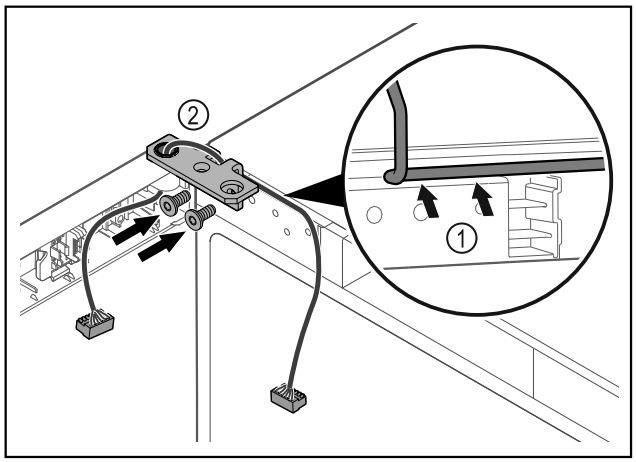

Fig. 40
▶ Feed the cable through the recess in the hinge and lay it carefully *Fig. 40 (1)*.
▶ Screw on the hinge *Fig. 40 (2)*.

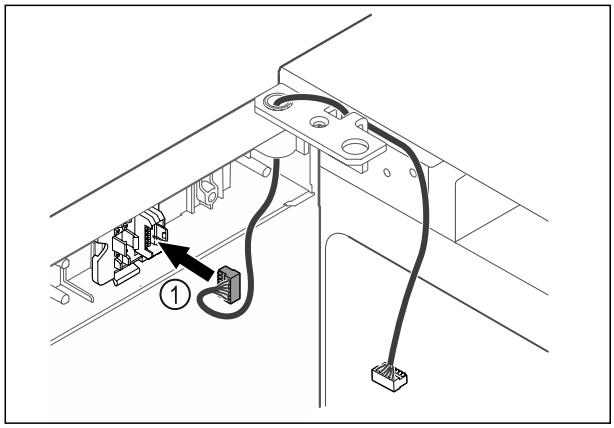

Fig. 41
▶ Put the plug *Fig. 41 (1)* in the plug holder.
-or-

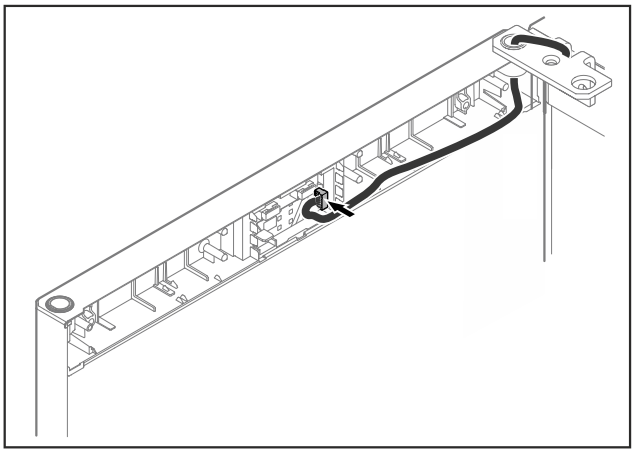

Fig. 42
▶ Plug the connector into the circuit board.

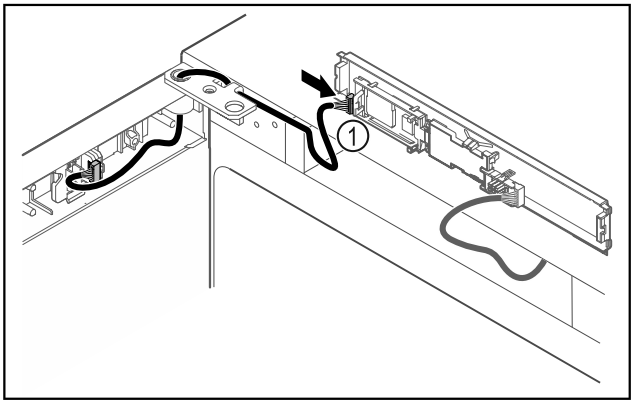

Fig. 43
▶ Connect the plug *Fig. 43 (1)* to the circuit board.

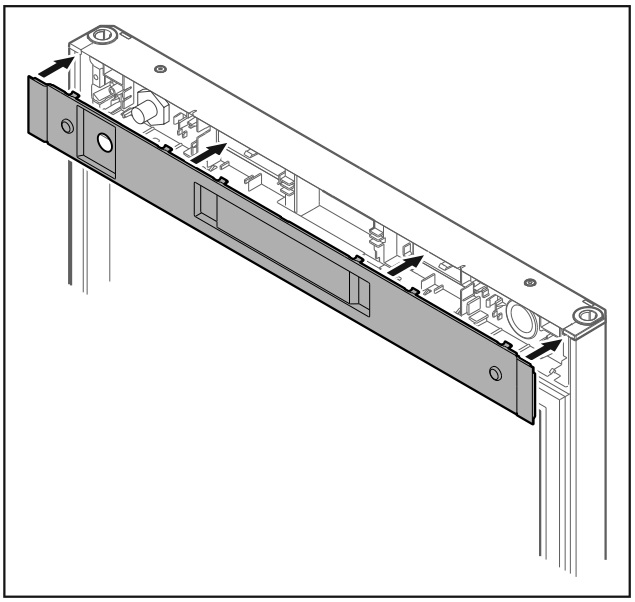

*Fig. 44 **
▶ Set the cover back in place.*

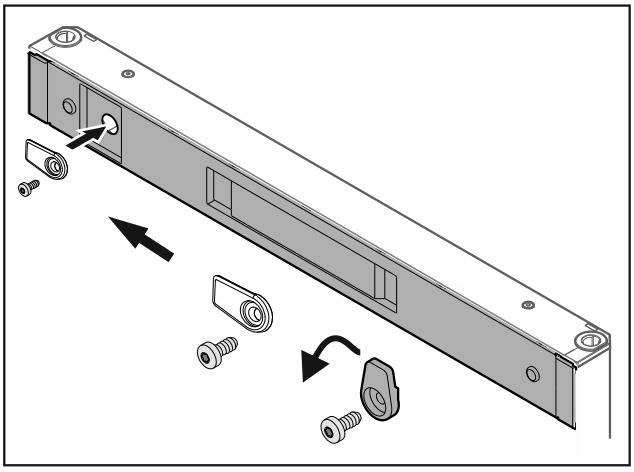

*Fig. 45 **

▶ Screw on the door latch.*

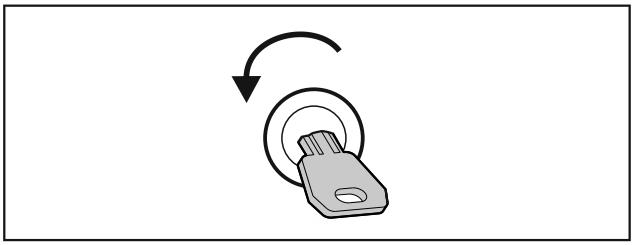

*Fig. 46 **

▶ Open the door.*

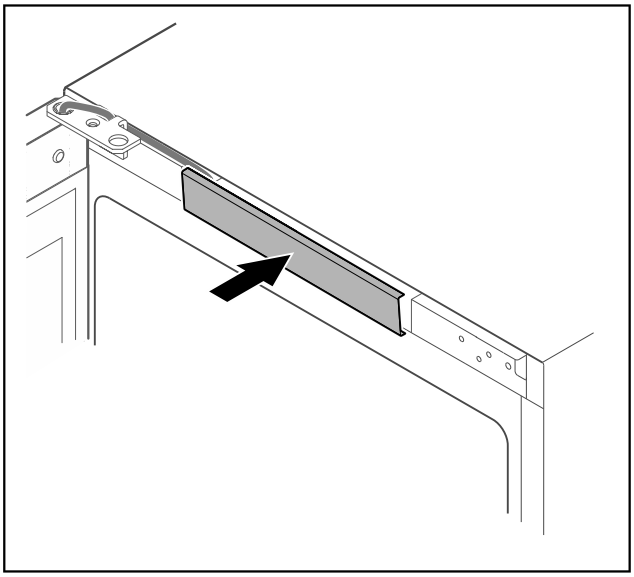

Fig. 47

▶ Snap in the middle cover.

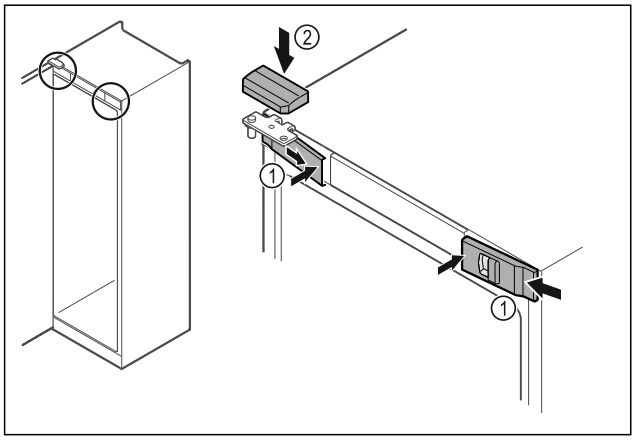

*Fig. 48 **

▶ Hook in the front covers *Fig. 48 (1)* on the side and snap them into place on the inside.*

▶ Snap on the top cover *Fig. 48 (2)* from above.*

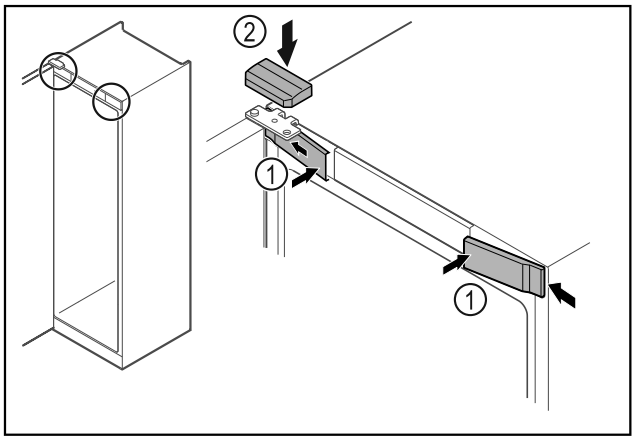

*Fig. 49 **

▶ Hook in the front covers *Fig. 49 (1)* on the side and snap them into place.*

▶ Snap on the top cover *Fig. 49 (2)* from above.*

▶ Close the door.

▷ The door has now been reversed.

3.10 Aligning the door

If the door is not straight, you can adjust it on the lower hinge.

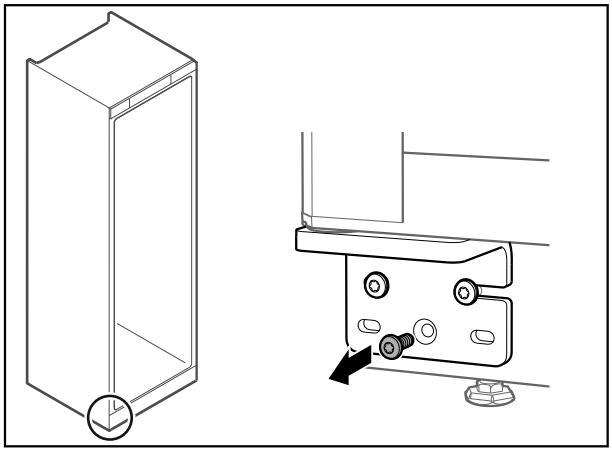

Fig. 50

▶ Remove the middle screw on the lower hinge.

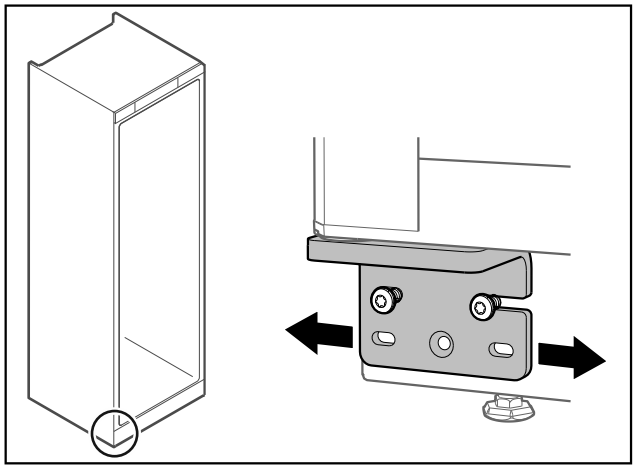

Fig. 51

▶ Slightly undo both screws and move the door with the hinge to the left or right.
▶ Fully tighten the screws (the middle screw is no longer needed).
▷ The door is now straight.

3.11 Installing appliance

CAUTION
Risk of injury and damage.
▶ Use 2 people to install appliance.

CAUTION
Risk of injury and damage.
The door can knock against the wall and become damaged as a result. In the case of glass doors, the damaged glass can cause injuries.
▶ Protect the door from knocking against the wall. Attach door stopper, e.g. felt stopper, to the wall.

▶ Connect all necessary components (e.g. mains cable) to the back of the appliance and route to the side.

Note
Cables can be damaged.
▶ Do not jam the cable when pushing the appliance back.

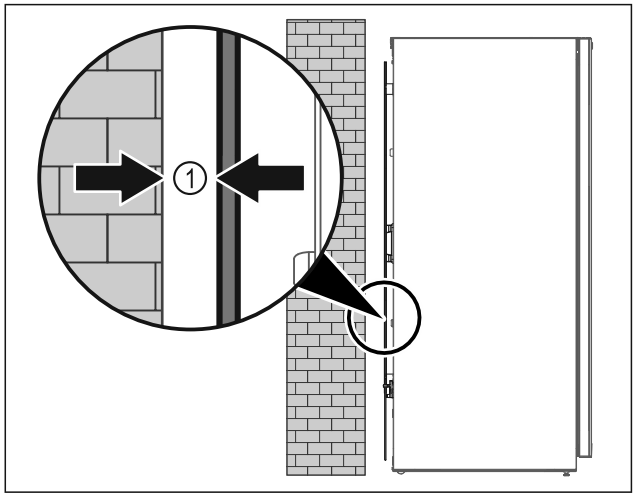

Fig. 52

▶ Set up the appliance either free-standing or directly against a wall at a minimum distance of 5 mm *Fig. 52 (1)*.

3.12 Setting up the appliance so it is level

NOTICE
Appliance body is deformed and door does not close.
▶ Align appliance horizontally and vertically.
▶ Compensate for uneven floors using adjustable feet.

WARNING
Incorrect height adjustment of the adjustable foot!
Can cause severe or even fatal injury. Incorrect height adjustment can cause the bottom part of the adjustable foot to come loose and the appliance to tip over.
▶ Do not unscrew the adjustable foot too far.

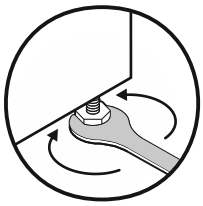

Fig. 53

Raising appliance:
▶ Turn adjustable foot clockwise.

Lowering appliance:
▶ Turn adjustable foot anticlockwise.

3.13 Installing multiple appliances

NOTICE
Risk of damage due to condensation between the side walls.
▶ Do not install the appliance directly next to another fridge.
▶ Install appliances with a space 3 cm between appliances.
▶ Only install multiple appliances up to temperatures of 35 °C and 65% humidity next to one another.
▶ At higher levels of humidity, increase space between appliances.

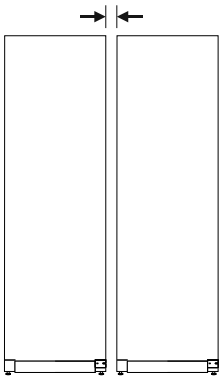

Fig. 54 Side-by-side installation

Note
A side-by-side kit is available as an accessory via Liebherr Customer Service. (see 11.4 Customer Service)

3.14 After setting up

▶ Remove all transport safety fittings from the interior.

NOTICE
Damage to property caused by pointed or sharp objects!
Using pointed or sharp objects when removing packaging material may damage the appliance.
▶ Do not use any pointed or sharp objects to remove the packaging material.

▶ Remove protective films from the interior: Peel the film off flat along the surface of the component to minimise its adhesive force.
▶ Clean the appliance. (see 10.2 Cleaning the appliance)
▶ Note down the type (model, number), appliance name, appliance/serial number, date of purchase and retailer's address.

3.15 Connecting the appliance to the power supply

WARNING
Danger of electric shock and injury due to damaged appliance or damaged mains cable!
Danger of cuts and fatal injuries. If the appliance or the mains cable is damaged during transport, you may be electrocuted. You could also cut yourself on damaged parts of the appliance housing.
▶ Check the appliance and the mains cable for damage after transport.
▶ Never put the appliance into operation if the appliance or the mains cable are damaged.
▶ Contact Customer Service.

You can connect your appliance to the mains using the power cable supplied separately. The mains power cable has an appliance coupler at one end and a mains plug at the other end.

Make sure that the following requirements are fulfilled:
- The appliance and power cable are undamaged.
- The appliance is set up in accordance with the regulations. (see 3.11 Installing appliance)
- Requirements for the electrical connection are met.
- Dimensions for connection in accordance with regulations are known and observed.
- Mains voltage and frequency correspond to the specifications on the type plate.
- The socket is earthed according to the regulations and fused.
- The fuse tripping current is between 10 A and 16 A.
- The socket is easily accessible and is not behind the appliance.

NOTICE
Danger of damage to incorrect operation!
Damage to the electrical components of the appliance.
▶ Only use the supplied mains cable.

WARNING
Danger of fire due to incorrect connection!
Burns.
Damage to the appliance.
▶ Do not use an extension cable.
▶ Do not use distributor blocks.

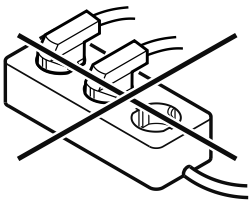

NOTICE
Danger of damage to incorrect connection!
Damage to the appliance.
▶ Do not connect the appliance to a stand-alone inverter, e.g. solar power systems and petrol generators.

▶ Connect the mains cable plug to the power supply. Ensure that the plug is tightly in the socket.
▷ The standby symbol appears in the display.
▷ If no action occurs within 60 seconds: The standby symbol fades or disappears.
▷ The appliance is connected. For information regarding first use, see the following section or the operating instructions.

3.16 Disposing of packaging

WARNING
Danger of suffocation due to packing material and plastic film!
▶ Do not allow children to play with packing material.

The packaging is made of recyclable materials:
- corrugated board/cardboard
- expanded polystyrene parts
- polythene bags and sheets
- polypropylene straps
- nailed wooden frame with polyethylene panel*
▶ Take the packaging material to an official collecting point.

4 Functionality of the Touch display

You operate your appliance using the Touch display. You select appliance functions in the Touch display (hereafter referred to as display) by tapping them. If you do not perform any action on the display for 10 seconds, the display either jumps back to the higher-level menu or directly to the status display.

4.1 Navigation and symbol explanation

In the illustrations, different symbols are used to navigate the display. The following table describes these symbols.

Symbol	Description
	Press the Next navigation arrow: Navigates to the next option in the menu.
	Press the Back navigation arrow: Jumps back one option in the menu.

* Depending on model and options

Symbol	Description
	Press and hold the Back navigation arrow for 3 seconds: Jumps back to the status display in the main menu or from the Settings menu.
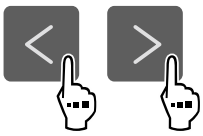	**Press the navigation arrow several times in succession:** Navigates in the menu to the desired function.
	Press the Confirm symbol: Activates/deactivates function. Opens submenu.
	Press the Confirm symbol together with the back icon: Jumps back one menu level.
	Arrow with clock: It takes more than 10 seconds for the following message to appear in the display.
	Arrow with a time indication: It takes the specified amount of time until the following message appears in the display.
	“Open Settings menu” symbol: Navigates to the Settings menu and opens the settings menu. If necessary: Navigate to the desired function in the Settings menu. (see 4.2.1 Opening the Settings menu)
	“Open Advanced menu” symbol: Navigates to the Advanced menu and opens the advanced menu. If necessary: Navigate to the desired function in the Advanced menu. (see 4.2.2 Opening the Advanced menu)
No action for 10 seconds	If you do not perform any action on the display for 10 seconds, the display either jumps back to the higher-level menu or directly to the status display.
Opening door and closing it again	If you open the door and immediately close it again, the display jumps directly back to the status display.

Note: Illustrations of the display are shown in the English version.

4.2 Menus

The appliance functions can be found in various menus.

Menu	Description
Main menu	When you switch the appliance on, you are automatically in the main menu. From here you can navigate to the most important appliance functions, to the Settings menu and to the Advanced menu.
 Settings menu	The Settings menu contains additional appliance functions for setting up your appliance. (see 4.2.1 Opening the Settings menu)
 Advanced menu	The advanced menu contains special appliance functions for setting up your appliance. Access to the Advanced menu is protected by the numerical code **1 5 1**. (see 4.2.2 Opening the Advanced menu)

4.2.1 Opening the Settings menu

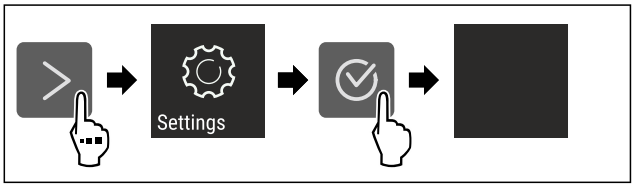

Fig. 55 Example illustration

▶ Carry out action steps according to the illustration.
▷ Settings menu is open.
▶ If necessary: Navigate to the desired function.

4.2.2 Opening the Advanced menu

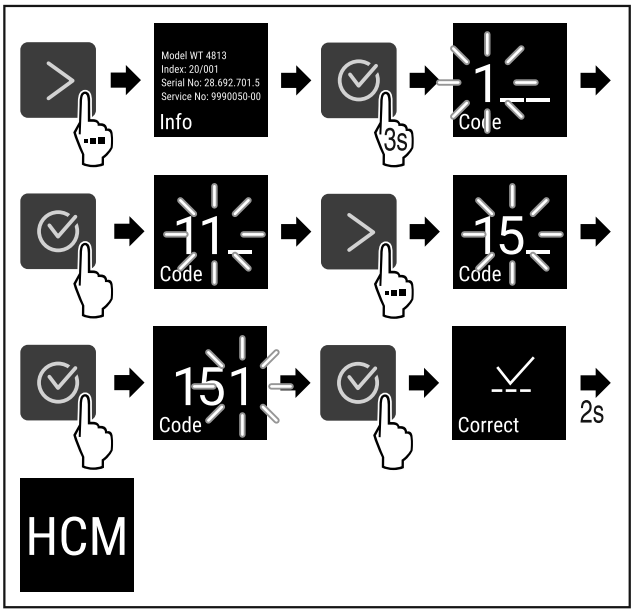

*Fig. 56 Access with numerical code **151***

▶ Carry out action steps according to the illustration.
▷ The expanded menu is open.
▶ If necessary: Navigate to the desired function.

4.3 Sleep mode

If you do not touch the display for 1 minute, the display switches to sleep mode. In sleep mode, the display brightness is dimmed.

4.3.1 Ending sleep mode

▶ Press any navigation key.
▷ Sleep mode is ended.

5 Putting into operation

5.1 Switching on appliance (first use)

Make sure that the following requirements are fulfilled:

- ❑ The appliance has been installed and connected in accordance with the installation instructions.
- ❑ All adhesive strips, adhesive and protective films and transport locks are removed from inside and on the appliance.
- ❑ All marketing leaflets are removed from the drawers.
- ❑ You are familiar with the functionality of the Touch display. (see 4 Functionality of the Touch display)

Switch on the appliance using the Touch display:

▶ If the display is in sleep mode: Press the confirmation symbol.
▶ Carry out action steps according to the illustration.

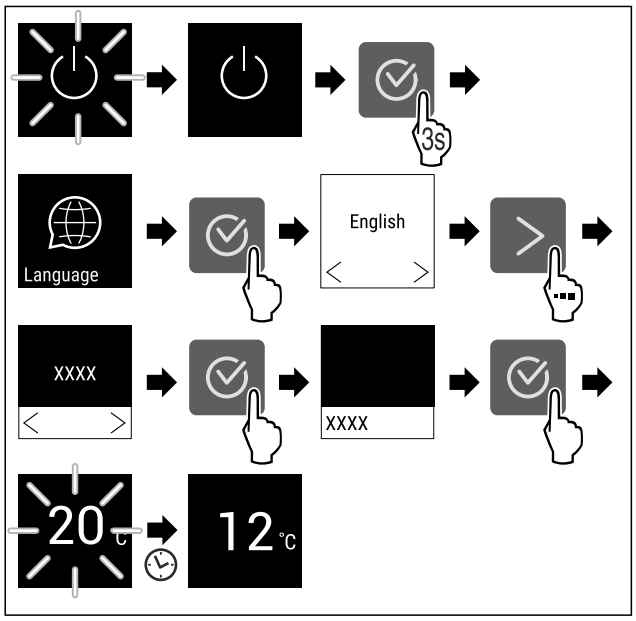

Fig. 57 Example illustration

▷ The status display appears. (see 8.1 Control and display elements)
▷ The appliance cools to the temperature set at the factory.
▷ The appliance starts in demo mode (status display with DEMO appears): If the appliance starts in demo mode, you can deactivate demo mode within the next 5 minutes. (see 8.2.20 Demo mode)

More information:

- Start the SmartDevice for the first time. (see 2.3 SmartDevice) and (see 8.2.16 WiFi)

Note
Accessories can be purchased from the Liebherr-Hausgeräte store at go.liebherr.com/47wtc4.

6 Storage

6.1 Information regarding storage

WARNING
Fire hazard from electrical appliances!
If you use electrical appliances in the food area of your appliance, they can cause a fire.
▶ Do not use electrical appliances in the food area of the appliance unless recommended by the manufacturer.

Note
The energy consumption increases and the cooling power goes down if ventilation is not sufficient.
▶ Always keep air slots clear.

Observe the following specifications for storage:

- Keep the air vents on the fan free.
- Keep liquids in closed containers.
- Position storage shelves according to the height required.
- Observe maximum load weight. (see 11.1 Technical specifications)

6.2 Storage sketches

6.2.1 WPbl 42.. / WSbl 42..

The maximum number of bottles is only possible with the specified spacings.

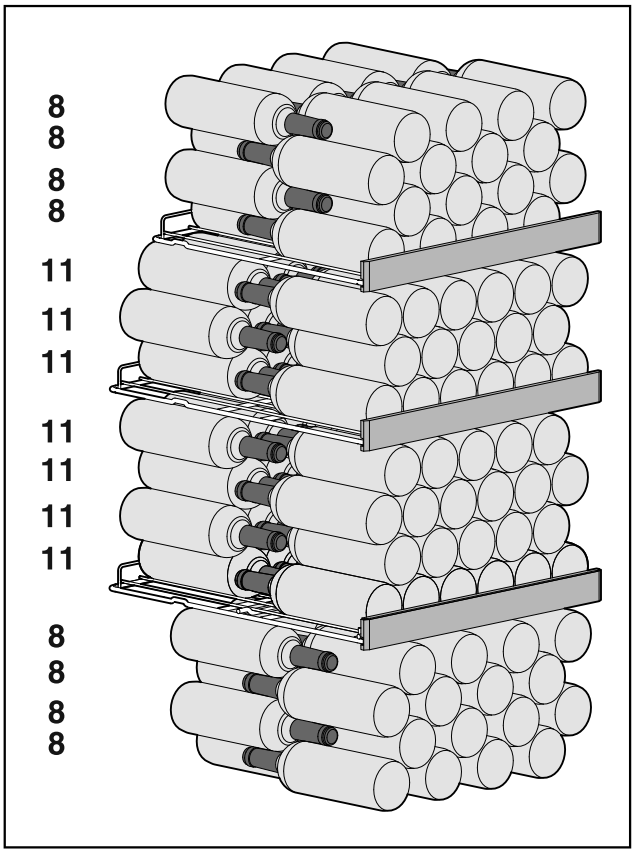

Fig. 58 Total 141 bottles

* Depending on model and options

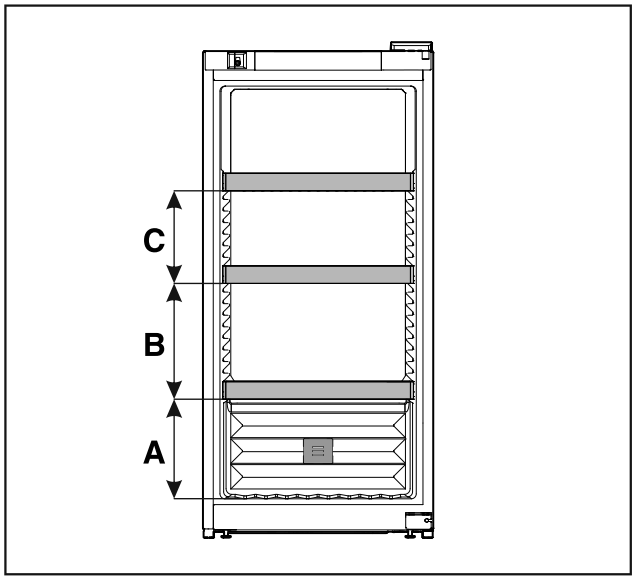

Fig. 59 Grid shelf spacing

	WPbl 42.. / WSbl 42..
A	260 mm
B	300 mm
C	240 mm

6.2.2 WPbl 46.. / WSbl 46..

The maximum number of bottles is only possible with the specified spacings.

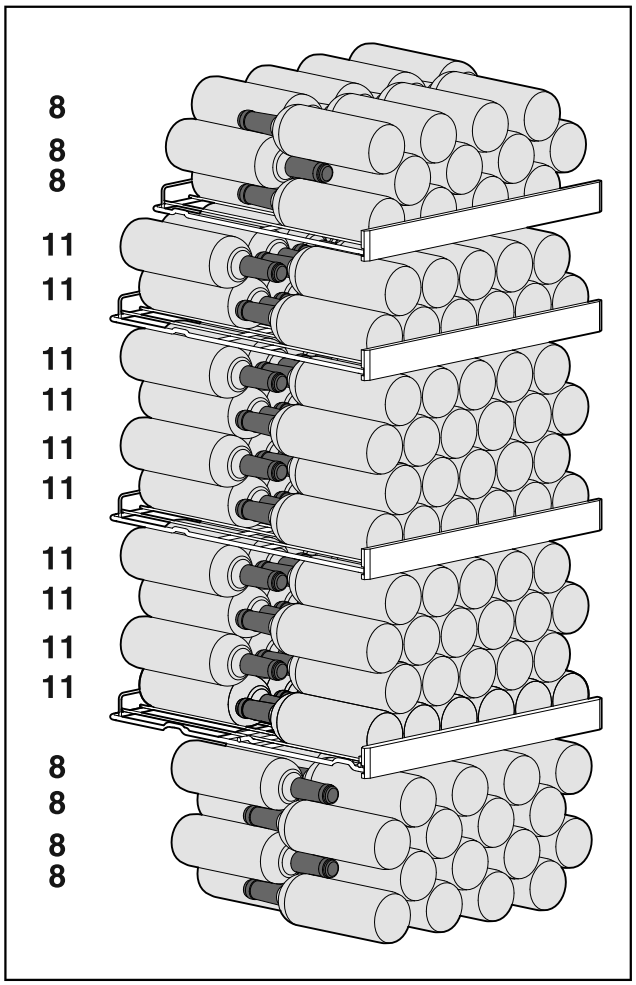

Fig. 60 Total 166 bottles

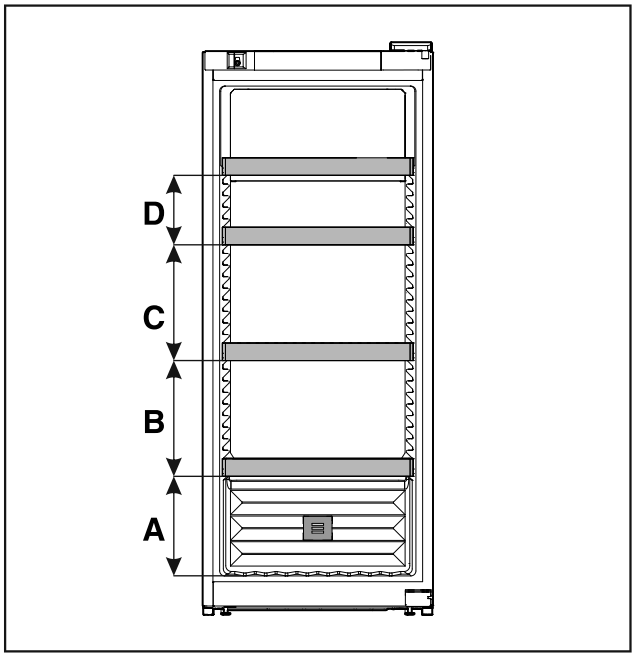

Fig. 61 Grid shelf spacing

	WPbl 46.. / WSbl 46..
A	260 mm
B	300 mm
C	300 mm
D	180 mm

6.2.3 WPbl 50.. / WSbl 50..

The maximum number of bottles is only possible with the specified spacings.

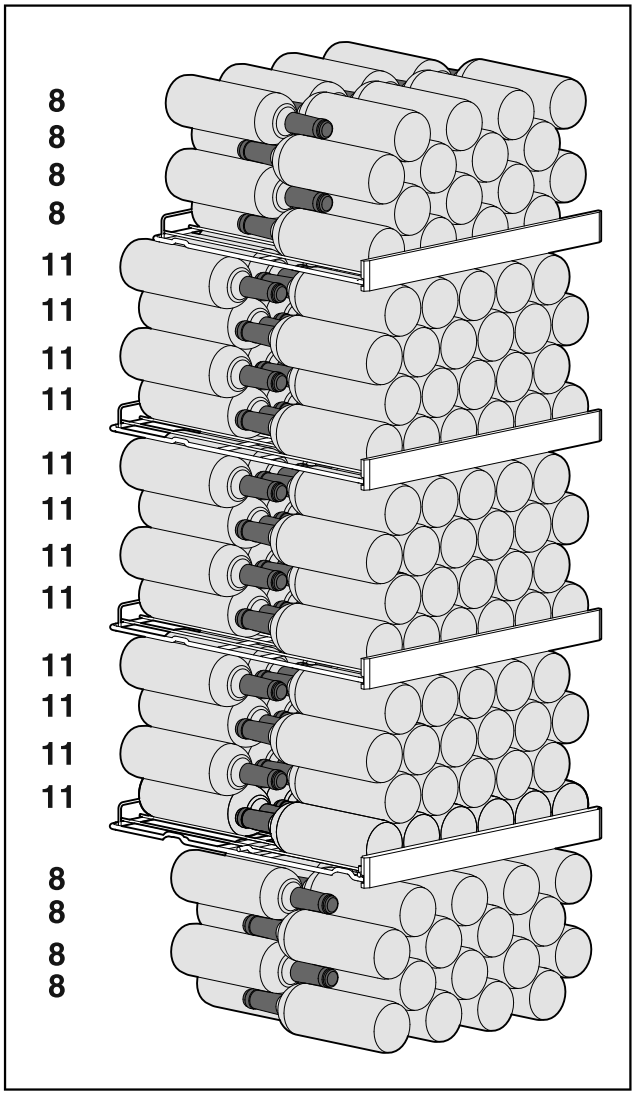

Fig. 62 Total 196 bottles

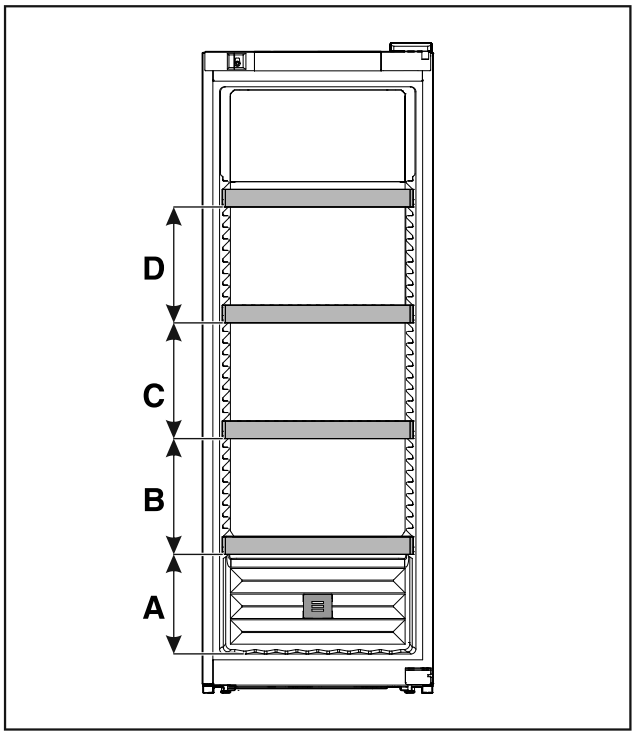

Fig. 63 Grid shelf spacing

	WPbl 50.. / WSbl 50..
A	260 mm
B	300 mm
C	300 mm
D	300 mm

6.2.4 WPbli 50.. / WSbli 50..

The maximum number of bottles is only possible with the specified spacings.

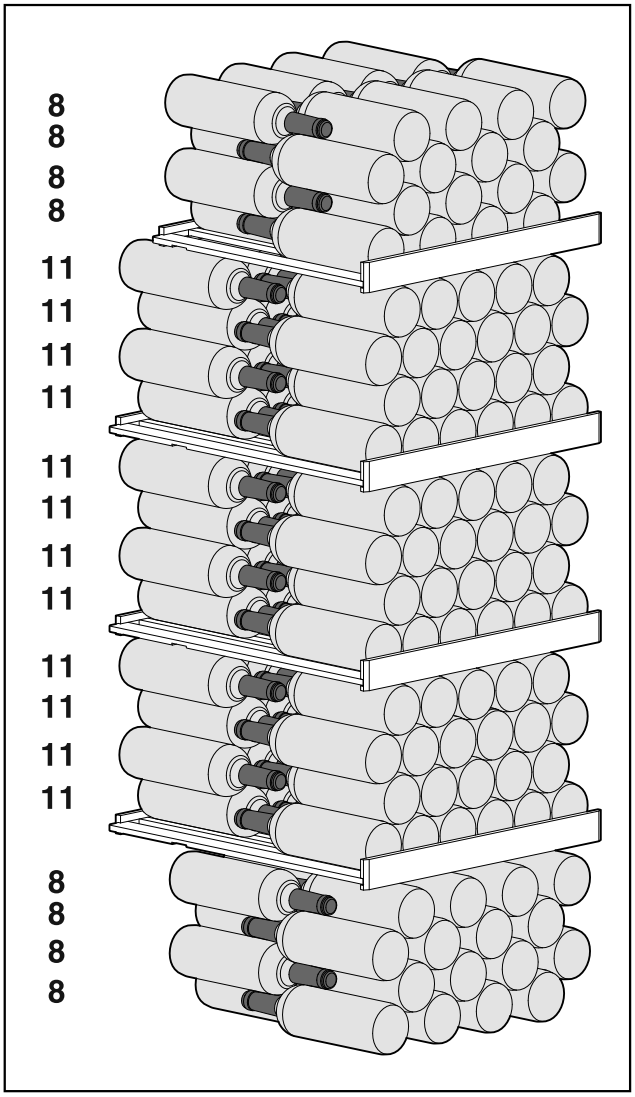

Fig. 64 Total 196 bottles

*** Depending on model and options**

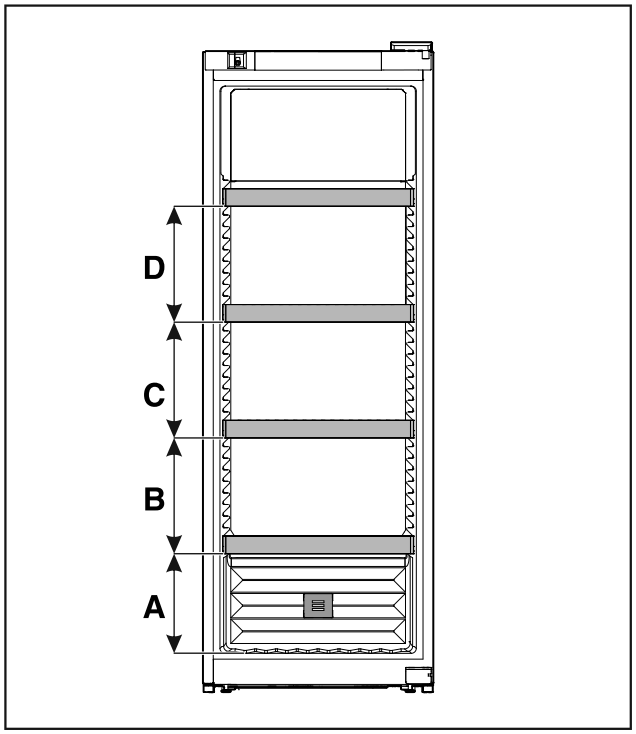

Fig. 65 Grid shelf spacing

	WPbli 50.. / WSbli 50..
A	260 mm
B	300 mm
C	300 mm
D	300 mm

WPbli 52.. / WSbli 52..

The maximum number of bottles is only possible with the specified spacings.

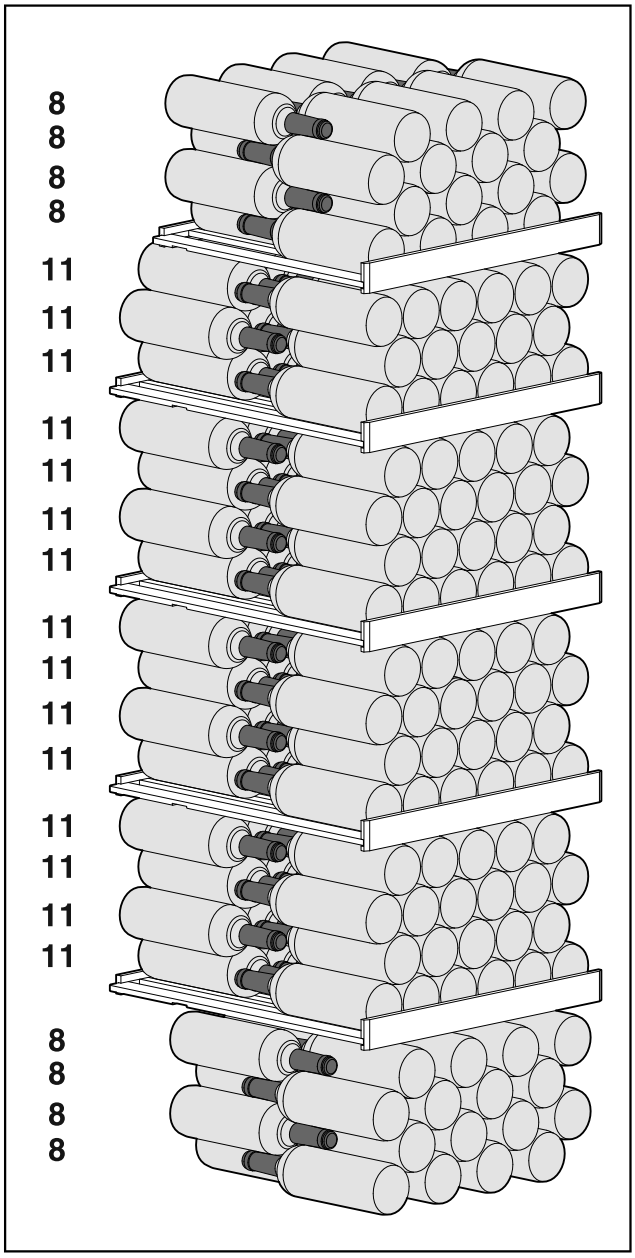

Fig. 66 Total 229 bottles

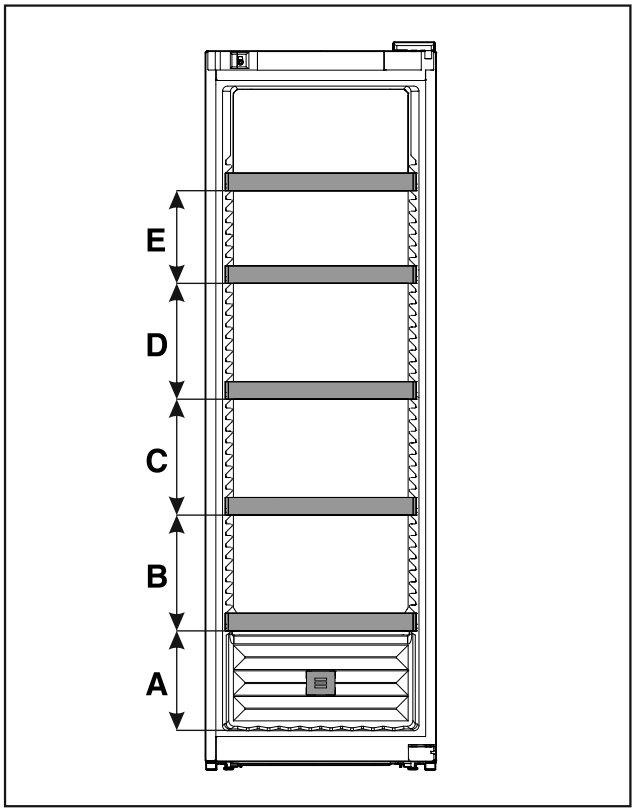

Fig. 67 Grid shelf spacing

	WPbli 52.. / WSbli 52..
A	260 mm
B	300 mm
C	300 mm
D	300 mm
E	240 mm

WSbli 77..

The maximum number of bottles is only possible with the specified spacings.

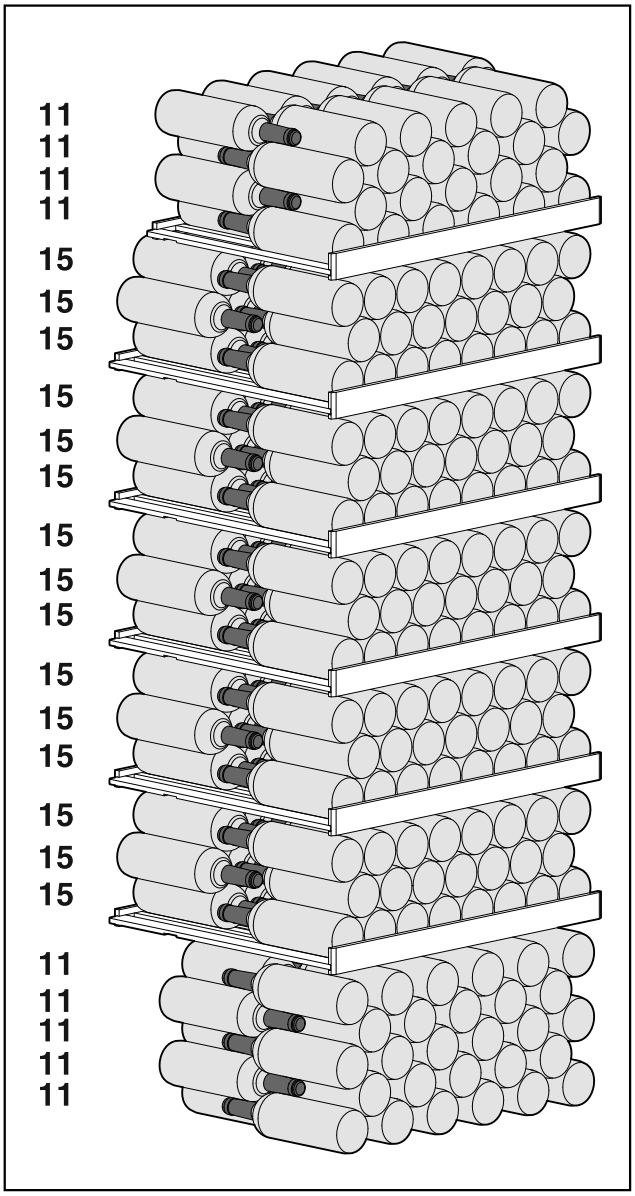

Fig. 68 Total 324 bottles

*** Depending on model and options**

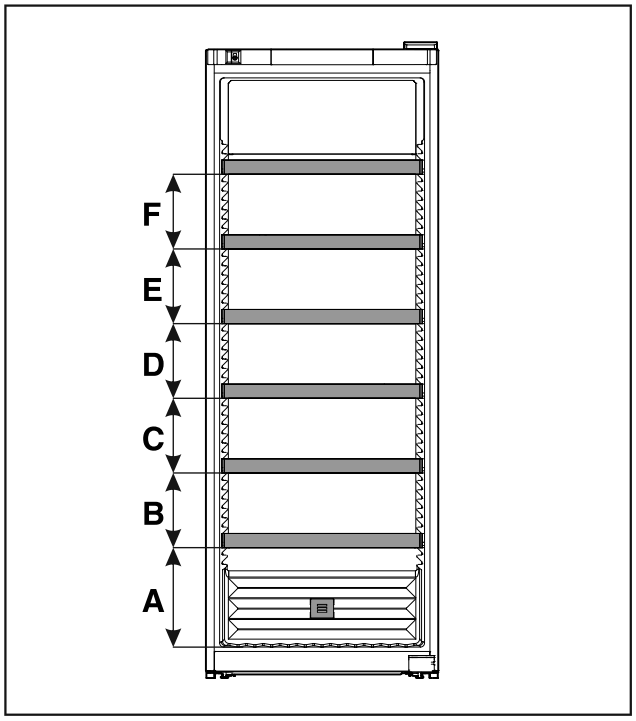

Fig. 69 Grid shelf spacing

	WSbli 77..
A	320 mm
B	240 mm
C	240 mm
D	240 mm
E	240 mm
F	240 mm

7 Saving energy

- Pay attention to good ventilation. Do not cover ventilation holes or grids.
- Always keep the fan air slits clear.
- Do not place the appliance in direct sunlight or near radiators or similar sources of heat.
- If the appliance is placed directly next to an oven, the energy consumption may increase slightly. This is dependent on the service life and usage intensity of the oven.
- Energy consumption depends on the installation conditions, e.g. the ambient temperature . A warmer ambient temperature can increase the energy consumption.
- Open the appliance for as short a time as possible.
- The lower the temperature is set the higher the energy consumption.

Dust deposits increase energy consumption:

- For refrigerators with heat exchangers dust the metal grid on the back of the appliance once a year.

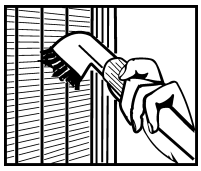

8 Controls

8.1 Control and display elements

The display provides a quick overview of the current appliance status, the temperature setting, the status of functions and settings as well as alarm and error messages.

It is operated using the navigation arrows and confirmation symbol.

Functions can be activated or deactivated and setting values can be changed.

Fig. 70 Display

(1) Status display
(2) Backwards navigation arrow
(3) Forwards navigation arrow
(4) Confirm

Fig. 71 Display with HumidityControl

(1) Status display
(2) Backwards navigation arrow
(3) Forwards navigation arrow
(4) Confirm

Status display

*Fig. 72 Status display with temperature**

*Fig. 73 Status display**

(1) Temperature **(2)** Humidity

The status display shows the temperature and is the home display. You navigate from here to the other functions and settings. The status display may show a range of display symbols.

Display symbols

Display symbols provide information about the status of the appliance.

Symbol	Appliance status
	Standby Appliance is switched off.
	Flashing standby symbol Appliance is starting up.
	Flashing temperature Target temperature not yet reached. Appliance cooling to temperature set.
	Temperature display
	D in the display Appliance is in DemoMode.
	Flashing symbol A fault is still active.
	Error symbol Appliance is in error state.
	White bar at the bottom Submenu
	White background Default, active setting or active value

Symbol	Appliance status
	Increasing bar Press button for 3 seconds to activate setting.
	Decreasing bar Press button for 3 seconds to deactivate setting.

Status display symbols

Acoustic signals

A signal sounds in the following cases:

- If a function or a value is confirmed.
- If a function or a value can either not be activated or not deactivated.
- As soon as an error occurs.
- If there is an alarm message.

The alarms can be switched on and off in the customer menu.

8.2 Appliance functions

8.2.1 Notes on the appliance functions

The appliance functions are set at the factory so that your appliance is fully functional.

Before you alter, activate or deactivate the device functions, make sure that the following requirements are met:

- ❑ You have read and understood the descriptions of how the display works. (see 4 Functionality of the Touch display)
- ❑ You have familiarised yourself with the operating and display elements of your appliance. (see 8.1 Control and display elements)

8.2.2 Switching appliance on and off

Using this setting the entire appliance can be switched on and off.

Switching on appliance

Without activated DemoMode:

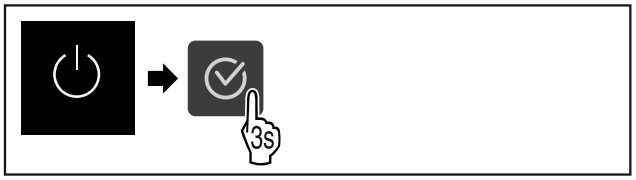

Fig. 74

▶ Carry out action steps according to the illustration.

With activated DemoMode:

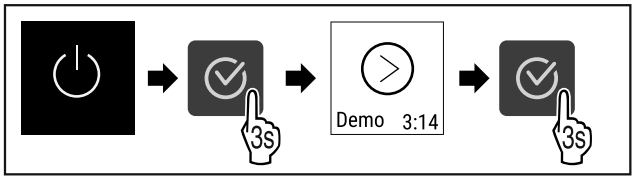

Fig. 75

▶ Carry out action steps according to the illustration.

Note

Deactivate DemoMode before countdown finishes.

*** Depending on model and options**

*Fig. 76 **

▷ The temperature appears in the display.

Switching off appliance

Fig. 77

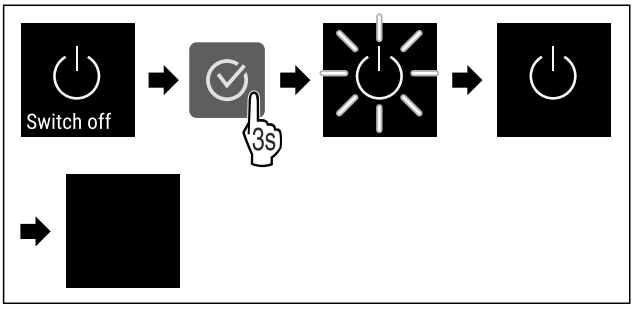

Fig. 78

▶ Carry out action steps according to the illustration.
▷ Standby symbol is shown in the display.
▷ Display switches off after approximately 10 minutes.

8.2.3 Temperature

The temperature depends on the following factors:

- How often the door is opened
- How long the door is open for
- The room temperature of the installation site
- The type, temperature and amount of refrigerated items

Setting temperature

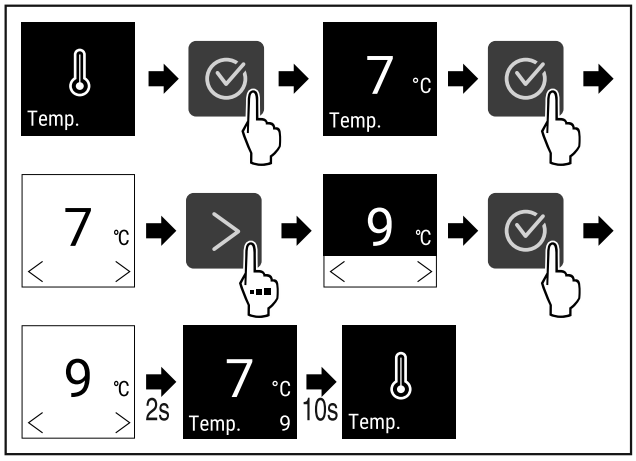

Fig. 79 Changing temperature from 7 °C to 9 °C

▶ Carry out action steps according to the illustration.
▷ Temperature is set.

8.2.4 Lighting intensity

*

This setting allows the interior brightness to be adjusted incrementally.

The following brightness values can be set:

- Off
- 20%
- 40%
- 60%
- 80%
- 100% (default)

Setting lighting intensity

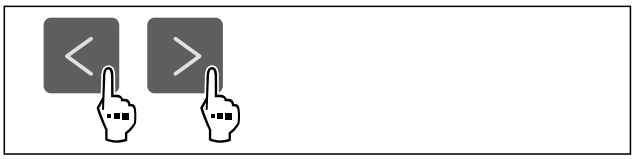

Fig. 80

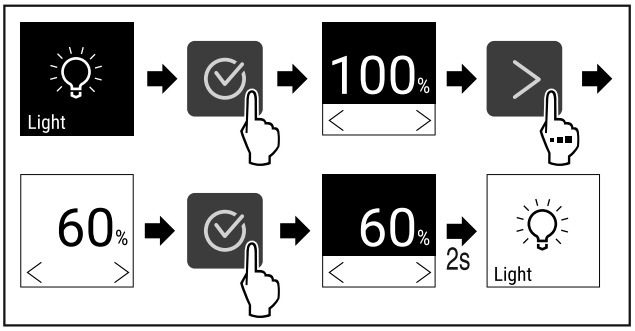

Fig. 81

▶ Carry out action steps according to the illustration.
▷ The lighting intensity increases or decreases accordingly.

8.2.5 HumiditySelect

*

Use this function to set the humidity inside your appliance. Setting the humidity correctly will have a positive effect on the structure of the corks during long-term storage and prevent them from drying out.

Note
The frequency and duration for which the door is open influence the humidity in the appliance.

You can choose between two humidity settings:*

HumiditySelect function	Temperature setting on the appliance*	Application/energy consumption*
Standard (preset)	10-12 °C	average humidity in the environment between 50-80% low energy consumption of the appliance
High	10-12 °C	average humidity in the environment < 50% energy consumption of the appliance increases

Increasing the humidity in the appliance

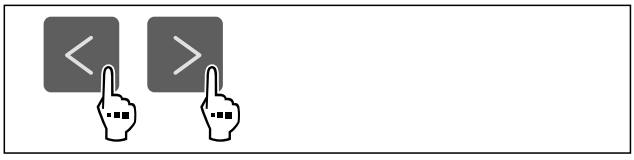

Fig. 82

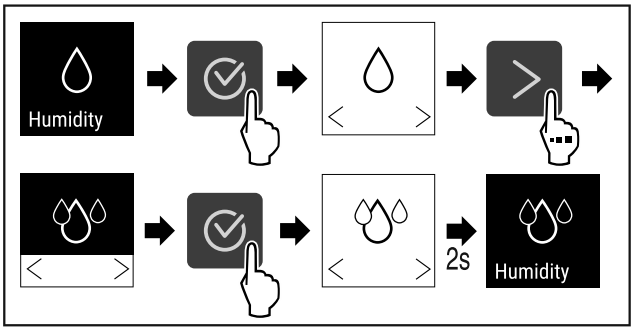

*Fig. 83 **

▶ Carry out action steps according to the illustration.
▷ Humidity in the appliance increases.

Setting the humidity in the appliance to standard

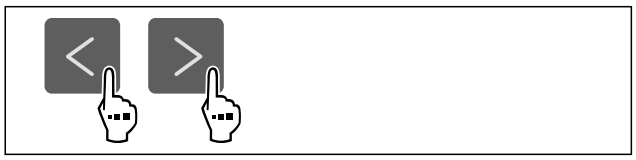

Fig. 84

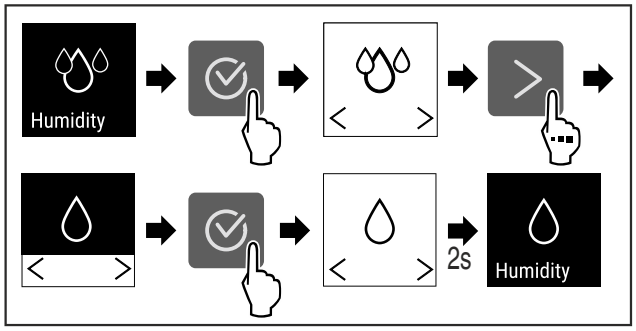

*Fig. 85 **

▶ Carry out action steps according to the illustration.
▷ Humidity in the appliance decreases.

8.2.6 HumidityControl *

Use this function to set the humidity inside your appliance. Your appliance is equipped with a humidity sensor. Setting the humidity correctly will have a positive effect on the structure of the corks during long-term storage and prevent them from drying out.

You can set the humidity between 50% and 80% in five percent increments. If you change the humidity, it will adjust to the changed value within a few days to weeks. Humidity control works best at ambient temperatures of 19 °C to 25 °C.

Observe the following for the humidity in the appliance:

- Notes on storing wine
- The humidity in the appliance depends on the frequency and duration of door openings, ambient temperature and humidity, load, and the appliance setting.
- Fluctuations caused by physical influences affect the humidity measurement in the appliance.
- The display shows changes in humidity in the appliance with a time delay.
- The display shows a humidity value averaged over 2 hours.

Note
If you operate your appliance in a very dry and cold environment (humidity < 30% and ambient temperature < 16 °C), Liebherr recommends you acquire the water box from the accessories range.

Accessories can be purchased from the Liebherr-Hausgeräte store at home.liebherr.com/shop/de/deu/zubehor.html.

Changing the humidity in the appliance

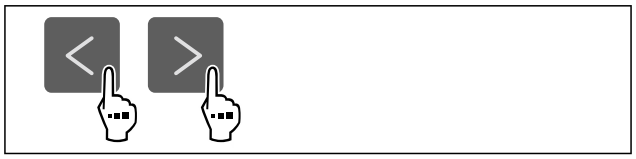

Fig. 86

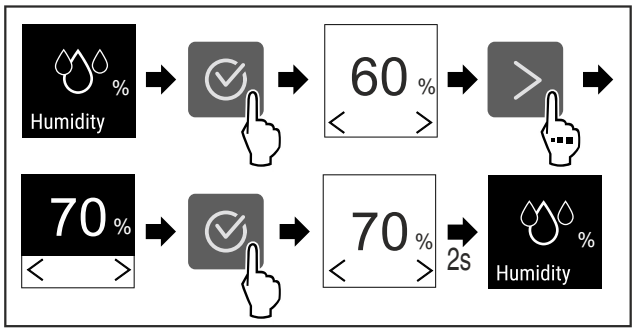

Fig. 87

▶ Carry out action steps according to the illustration.
▷ Humidity in the appliance changes to the selected value.

8.2.7 SabbathMode

You can use this function to activate or deactivate SabbathMode. If you activate this function, some electronic functions are switched off. As a result, your device meets the religious requirements for Jewish holidays such as Sabbath and complies with STAR-K Kosher certification.

Device status when SabbathMode is active
The status display shows SabbathMode permanently.
All functions on the display are locked except for the **Deactivate SabbathMode function**.
Active functions remain active.
The display remains bright when you close the door.
The interior lighting is deactivated.
Reminders are not implemented. The set time interval stops.
Reminders and warnings are not displayed.
There is no door alarm.
There is no temperature alarm.
After a power failure, the appliance returns to SabbathMode.

Device status

Note
This appliance has certification from the “Institute for Science and Halacha”. (www.machonhalacha.co.il)

You can find a list of STAR-K-certified appliances at www.star-k.org/appliances.

* Depending on model and options

Activating SabbathMode

Fig. 88

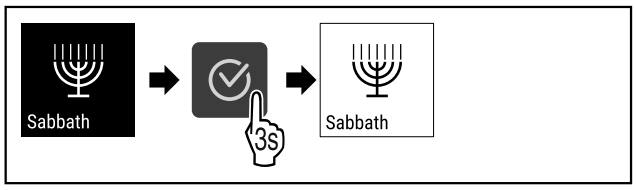

Fig. 89

▶ Carry out action steps according to the illustration.
▷ SabbathMode is activated.
▷ The status display shows SabbathMode permanently.

Deactivating SabbathMode

The SabbathMode is automatically deactivated after 80 hours. However, you can also deactivate SabbathMode manually at any time:

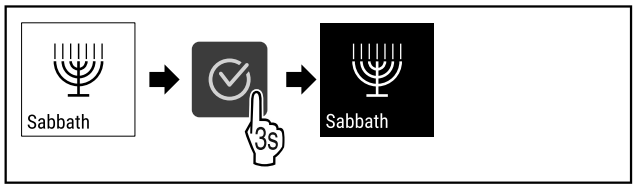

Fig. 90

▶ Carry out action steps according to the illustration.
▷ SabbathMode is deactivated.

8.2.8 Display lock

This setting avoids accidental operation of the appliance.

Application:

- Prevent settings and functions being changed unintentionally.
- Prevent appliance being switched off unintentionally.
- Prevent temperature being set unintentionally.

Activating the display lock

Fig. 91

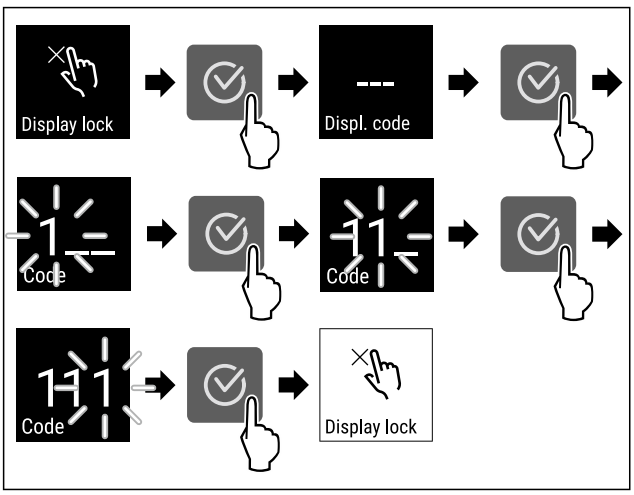

*Fig. 92 Example uses the preset display code **1 1 1**.*

▶ Carry out action steps according to the illustration.
▷ The display lock is activated.
▷ The status display appears.

Unlocking the display lock for a short time

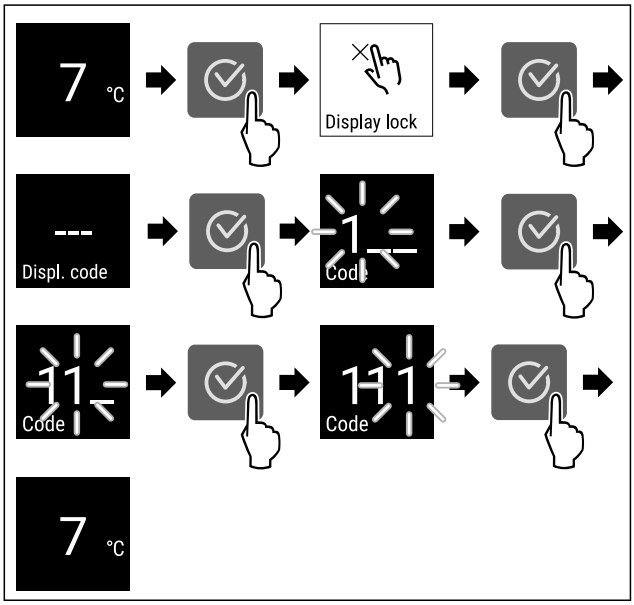

*Fig. 93 **

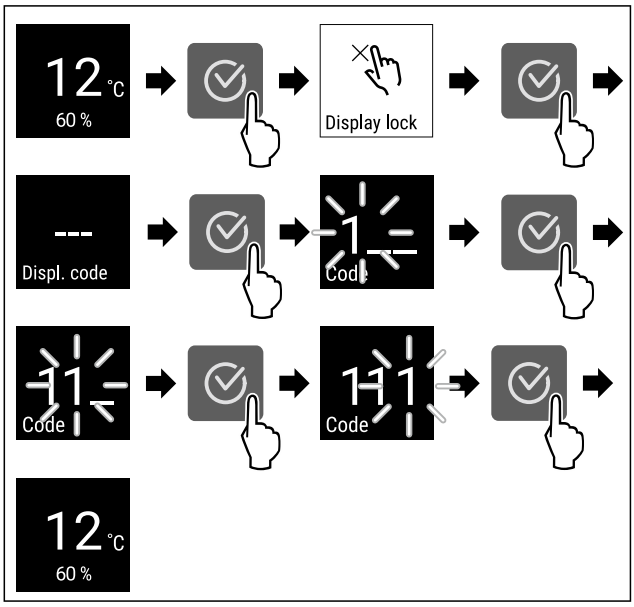

*Fig. 94 **

▶ Carry out action steps according to the illustration.
▷ The display lock is deactivated.
▷ The status display appears.

Deactivating the display lock

▶ Carry out action steps (see Unlocking the display lock for a short time) .

Fig. 95

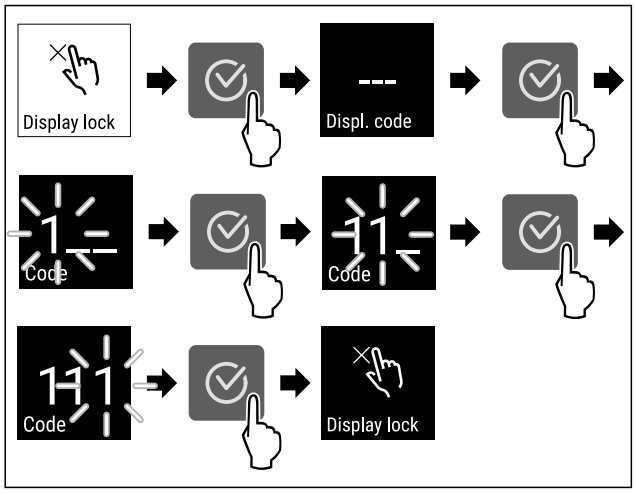

Fig. 96

▶ Carry out action steps according to the illustration.
▷ The display lock is deactivated.
▷ The status display appears.

8.2.9 Display PIN

Use this function to change the display PIN. The display PIN is set to 1 1 1 on delivery. If you have forgotten the display PIN, you can reset the display PIN by resetting the appliance to the factory settings. (see 8.2.21 Resetting to factory settings)

Changing the display PIN

Fig. 97

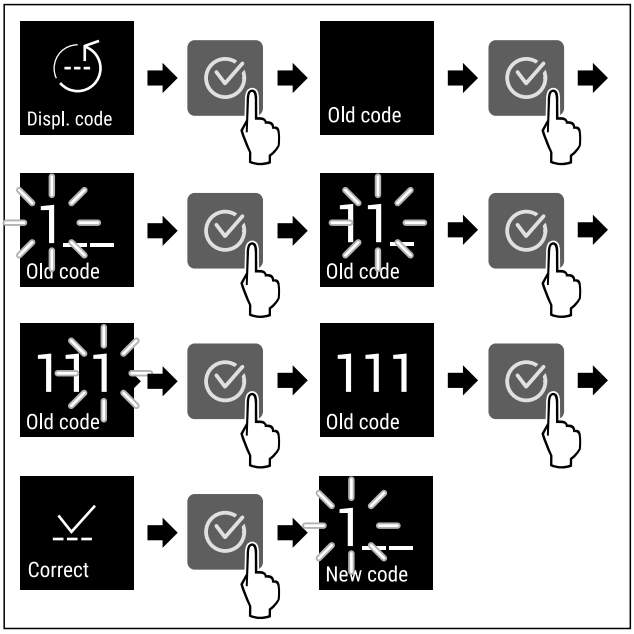

Fig. 98 Example illustration: Change display PIN from factory setting 1 1 1 to 2 3 4

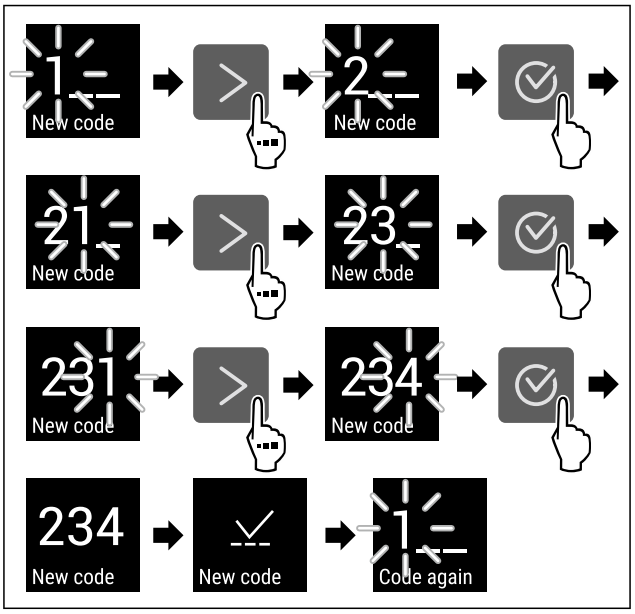

Fig. 98 Example illustration: Change display PIN from factory setting 1 1 1 to 2 3 4

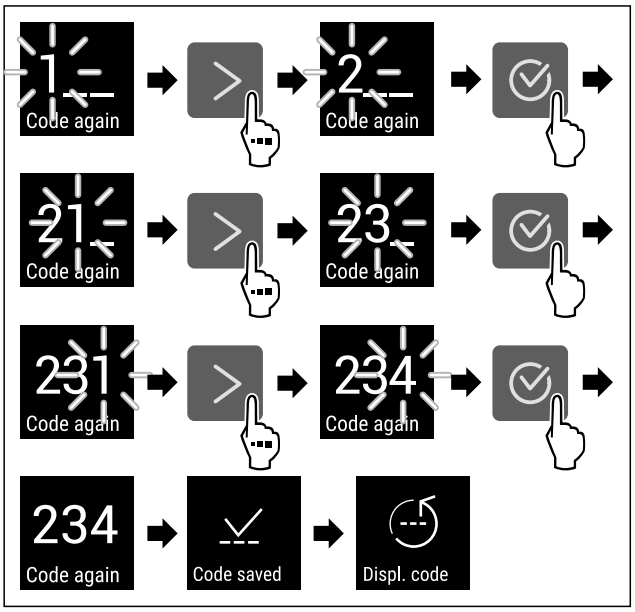

Fig. 98 Example illustration: Change display PIN from factory setting 1 1 1 to 2 3 4

▶ Carry out action steps according to the illustration.
▷ Display PIN is changed.

8.2.10 Reminder

Use this function to activate or deactivate the reminder to change the FreshAir activated carbon filter.

Deactivating the reminder

Fig. 99

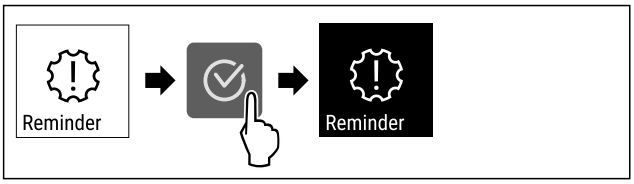

Fig. 100

▶ Carry out steps according to the illustration.
▷ Reminder is deactivated.

Activating the reminder

Fig. 101

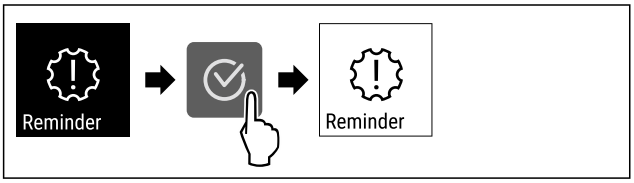

Fig. 102

▶ Carry out steps according to the illustration.
▷ Reminder is activated.

8.2.11 Language

This setting allows the display language to be set.

Setting language

Fig. 103

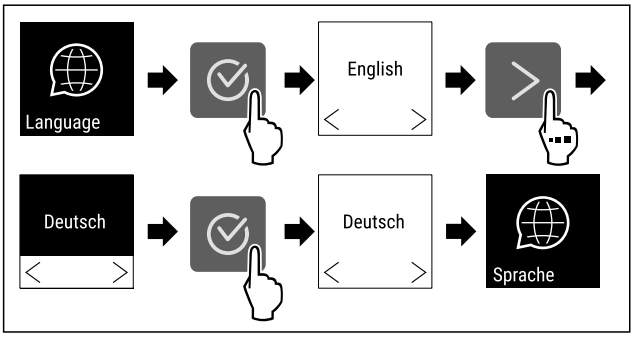

Fig. 104

▶ Carry out action steps according to the illustration.
▷ The selected language is set.

8.2.12 Temperature unit

Use this function to set the temperature unit. You can set degrees Celsius or degrees Fahrenheit as the temperature unit.

Setting the temperature unit

Fig. 105

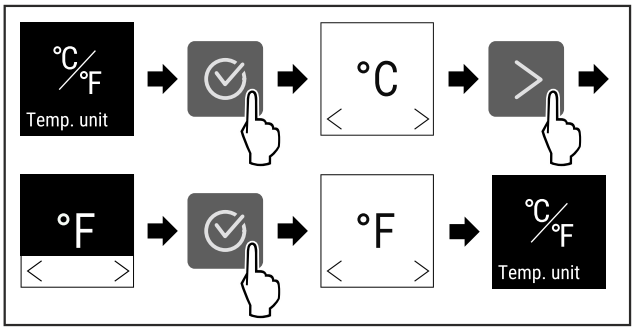

Fig. 106 Example illustration: Switch from degrees Celsius to degrees Fahrenheit.

▶ Carry out action steps according to the illustration.
▷ The temperature unit is set.

8.2.13 Display brightness

Use this function to set the display brightness in stages.

You can select the following brightness levels:

- 20 %
- 40 %
- 60 %
- 80 %
- 100 % (pre-setting)

Setting the brightness

Fig. 107

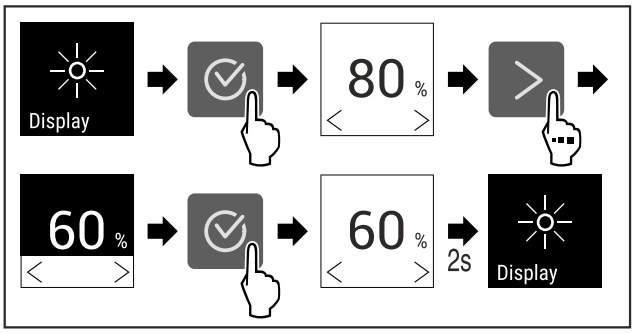

Fig. 108 Example illustration: Switch from 80 % to 60 %.

▶ Carry out action steps according to the illustration.
▷ The brightness is set.

8.2.14 Alarm Sound

This function enables all alarm sounds, such as door alarm, to be switched on and off.

Activating Alarm Sound

Fig. 109

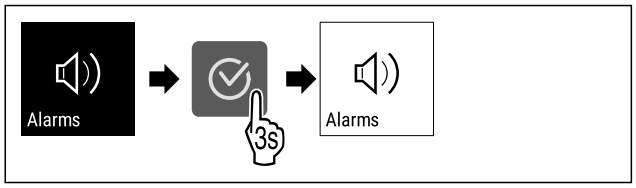

Fig. 110

▶ Carry out action steps according to the illustration.
▷ Alarm Sound is activated.

Deactivating Alarm Sound

Fig. 111

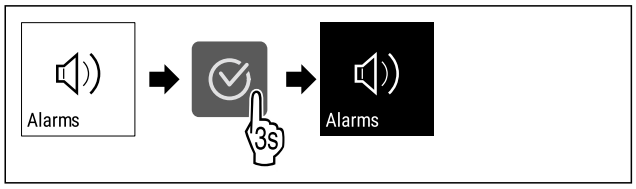

Fig. 112

▶ Carry out action steps according to the illustration.
▷ Alarm Sound is deactivated.

8.2.15 Key Sound

This function makes it possible to switch all confirmation sounds and the Startsound on and off.

Activating Key Sound

Fig. 113

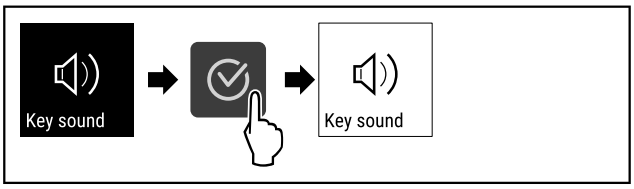

Fig. 114

▶ Carry out action steps according to the illustration.
▷ Key Sound is activated.

Deactivating Key Sound

Fig. 115

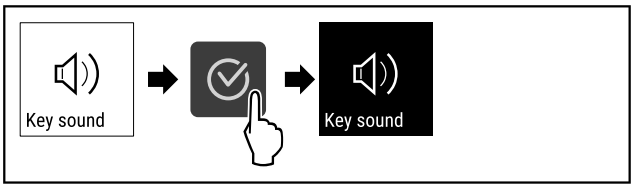

Fig. 116

▶ Carry out action steps according to the illustration.
▷ Key Sound is deactivated.

8.2.16 WiFi

Use this function to connect your appliance to WiFi. You can then operate it via the SmartDevice app on a mobile device. You can also use this function to disconnect or reset the WiFi connection.

To connect your device to WiFi, you need the SmartDeviceBox.*

More information on the SmartDevice: (see 2.3 SmartDevice)

Note
The SmartDevice function is not available in the following countries: Russia, Belarus, Kazakhstan.

You cannot use the SmartDeviceBox.*

Establishing the WiFi connection for the first time

Make sure that the following requirements are fulfilled:

- ❑ You have purchased and inserted a SmartDeviceBox. (see 2.3 SmartDevice) *
- ❑ You have installed the SmartDevice app (see apps.home.liebherr.com).
- ❑ Registration in the SmartDevice app is completed.

Fig. 117

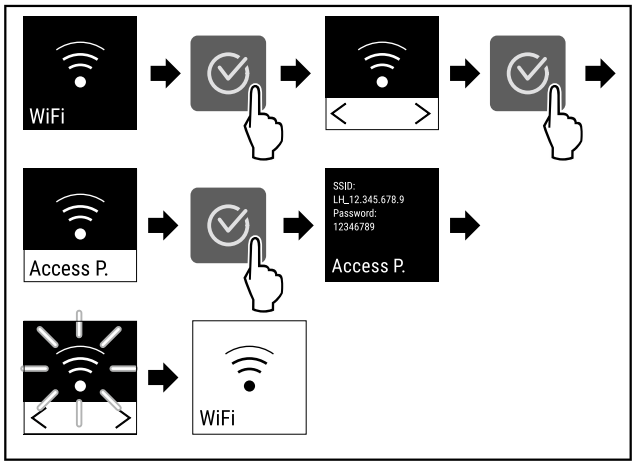

Fig. 118

▶ Carry out action steps according to the illustration.
▷ Connection is established.

Disconnecting from the WiFi

Fig. 119

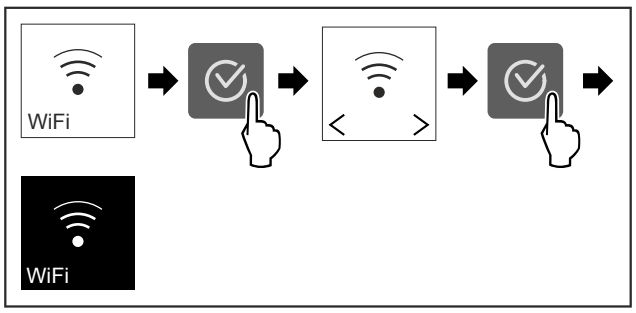

Fig. 120

▶ Carry out action steps according to the illustration.
▷ There is no connection.

Resetting the WiFi connection

Fig. 121

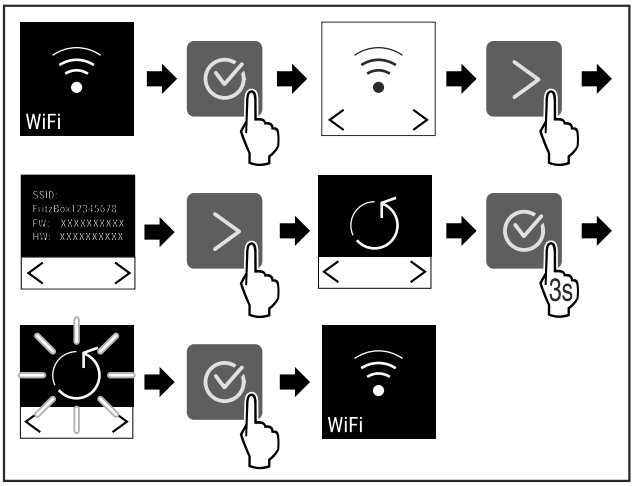

Fig. 122

▶ Carry out action steps according to the illustration.
▷ WiFi connection and other WiFi settings are reset to factory settings.

Showing information about the WiFi connection

Fig. 123

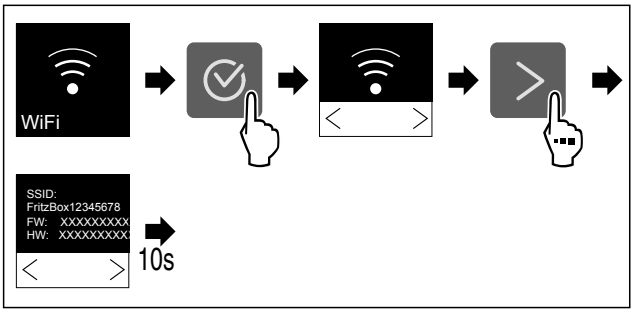

Fig. 124

Fig. 125 Status display

▶ Carry out action steps according to the illustration.

8.2.17 Device information

Use this function to indicate the model name, index, serial number and service number of your device. You will need the device information when you contact customer service. (see 11.4 Customer Service)

This function also opens the Advanced menu. (see 4 Functionality of the Touch display)

Indicating the device information

Fig. 126

Fig. 127

▶ Carry out action steps according to the illustration.
▷ Display indicates device information.

8.2.18 Software

Use this function to indicate the software version of your device.

Indicating the software version

Fig. 128

Fig. 129

▶ Carry out action steps according to the illustration.
▷ Display indicates software version.

8.2.19 Door alarm

Use this function to activate or deactivate the door alarm. The door alarm sounds if the door is open for too long. The door alarm is activated on delivery. You can set how long the door may be open before the door alarm sounds.

The following values can be set:

- 1 minute
- 2 minutes
- 3 minutes
- Off

Setting the door alarm

Fig. 130

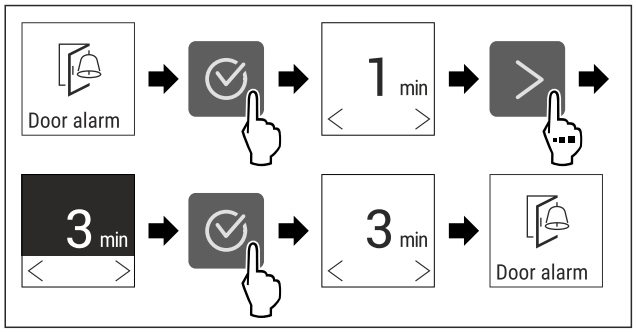

Fig. 131 Example illustration: Change door alarm from 1 minute to 3 minutes.

▶ Carry out action steps according to the illustration.
▷ The door alarm is set.

Deactivating the door alarm

Fig. 133

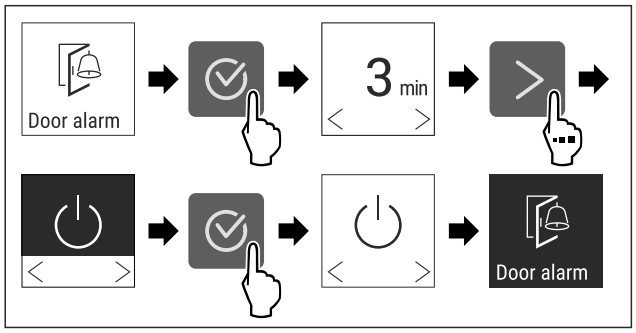

Fig. 134

▶ Carry out action steps according to the illustration.
▷ The door alarm is deactivated.

8.2.20 Demo mode

Demo mode is a special feature for dealers who want to demonstrate appliance features. If you activate demo mode, all refrigeration functions are deactivated.

If you switch on your appliance and a “D” appears on the status display, demo mode is already activated.

If you activate and then deactivate demo mode, the appliance will be reset to factory defaults. (see 8.2.21 Resetting to factory settings)

Activating demo mode

Fig. 135

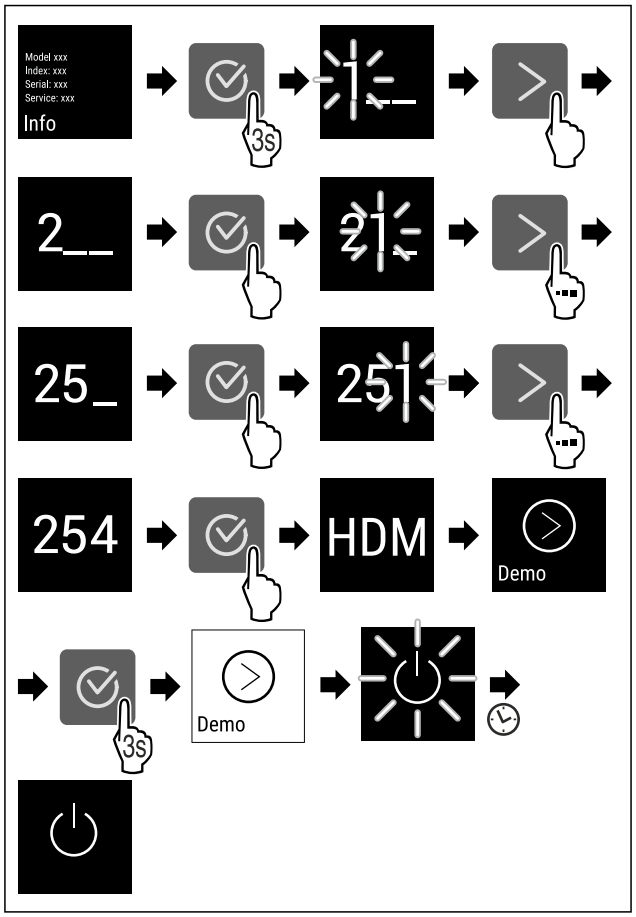

Fig. 136

▶ Carry out action steps according to the illustration.
▷ Demo mode is activated.
▷ Appliance is switched off.
▶ Switch on the appliance. (see 5.1 Switching on appliance (first use))
▷ “D” appears in the status display.

Deactivating demo mode

Fig. 137

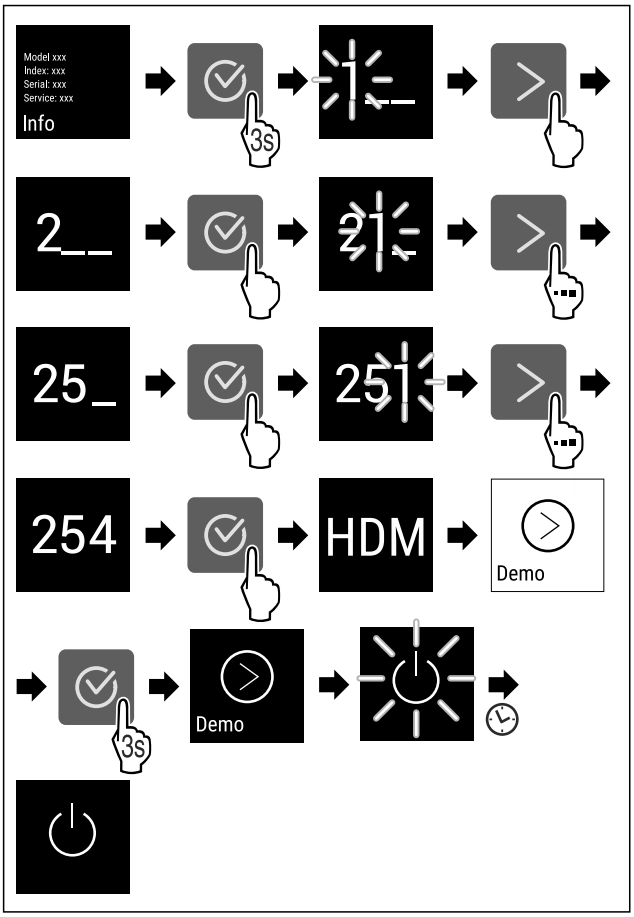

Fig. 138

▶ Carry out action steps according to the illustration.
▷ Demo mode is deactivated.
▷ Appliance is switched off.
▶ Switch on the appliance. (see 5.1 Switching on appliance (first use))
▷ Appliance is reset to factory settings.

8.2.21 Resetting to factory settings

Use this function to reset all settings to factory defaults. All settings you have made so far are reset to their original settings.

Performing a reset

Fig. 139

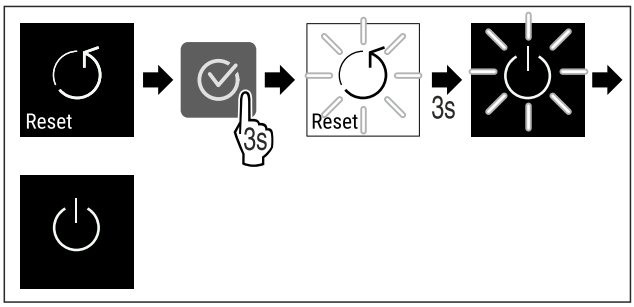

Fig. 140

▶ Carry out action steps according to the illustration.
▷ Device is reset.
▷ Device is switched off.
▶ Restart the device. (see 5.1 Switching on appliance (first use))

8.3 Messages

8.3.1 Warnings

Warnings are issued by means of an audio signal and visually via a symbol on the display. The signal gets louder until the warning is acknowledged.

Message	Cause	Remedy
Door open **Door open**	This message appears if the door is open for too long.	Close the door. Press the confirmation button. Alarm is ended. **Note** You can set how long it takes for this message to appear (see 8.2.19 Door alarm) .
Temperature **Temperature alarm**	This message appears if the temperature does not match the set temperature. Reasons for the differences in temperature can be: - Warm items for refrigeration have been placed inside. - Too much warm room air flowed in when rearranging and removing refrigerated products. The power was cut off for a prolonged period.	Press the confirmation button. Warmest temperature is displayed. Press the confirmation button. The current temperature flashes and the display alternates with the temperature alarm symbol until the set temperature is reached. Check the quality of the refrigerated goods.

Message	Cause	Remedy
Error **Error**	The appliance function is restricted, a component of the appliance is faulty, or the appliance is defective.	Press the confirmation button. Error code is displayed. Press the confirmation button. If present, another error code is indicated. **or** Status screen with flashing error symbol is displayed Pressing the navigation buttons indicates error code(s) again. Note the error code(s). Check whether the error is listed and whether you can resolve it yourself. (see 11.3 Technical fault) The error is not listed or persists: Contact Customer Service. (see 11.4 Customer Service) Transfer refrigerated goods.
Power **Power failure**	The message appears after an interruption in the power supply if the temperature is above the alarm limit when the power returns.	Press the confirmation button. The warmest temperature is displayed. Press the confirmation button. Alarm is cancelled and current temperature is indicated. Check the quality of the refrigerated goods.
WiFi error **WLAN error**	WLAN connection is interrupted.	Check the connection. Press the confirmation button. Alarm is ended.
WWW error **WLAN WWW error**	The message appears if there is no Internet connection via WLAN.	Check the connection. Press the confirmation button. Alarm is ended.

8.3.2 Reminder

Reminders appear when you are being asked to do something. They are issued by means of an audio signal and visually via a symbol on the display. Acknowledge the message by pressing the confirmation button.

Message	Cause	Remedy
FreshAir **ReplaceFreshAir activated charcoal filter**	The message appears every 6 months.	ReplaceFreshAir activated charcoal filter, Reminder is closed.

Message	Cause	Remedy
Humidity *	This message appears if humidity falls below 50%.*	Fill water tray.* * Reminder is closed.*

9 Features

9.1 Safety lock*

The lock in the appliance door is equipped with a safety mechanism.

9.1.1 Locking appliance

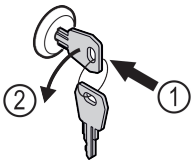

Fig. 141 Example illustration

▶ Insert key.
▶ Turn key anticlockwise by 90°.
▷ The appliance is locked.

9.1.2 Unlocking appliance

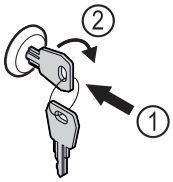

Fig. 142 Example illustration

▶ Insert key *Fig. 142 (1)*.
▶ Turn key clockwise by 90° *Fig. 142 (2)*.
▷ The appliance is unlocked.

9.2 Wooden grid

The appliances are equipped with a wooden grid for wine storage.

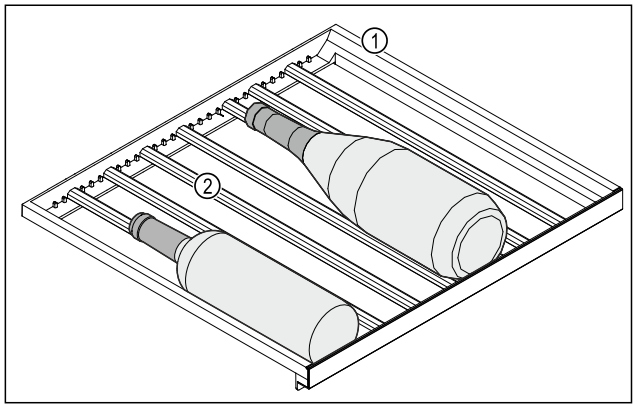

Fig. 143 Example illustration

(1) Wooden grid **(2)** Bar

The standard positions for the bars are indicated by notches. If you use these, you can store the maximum number of bottles. (see 6.2 Storage sketches)

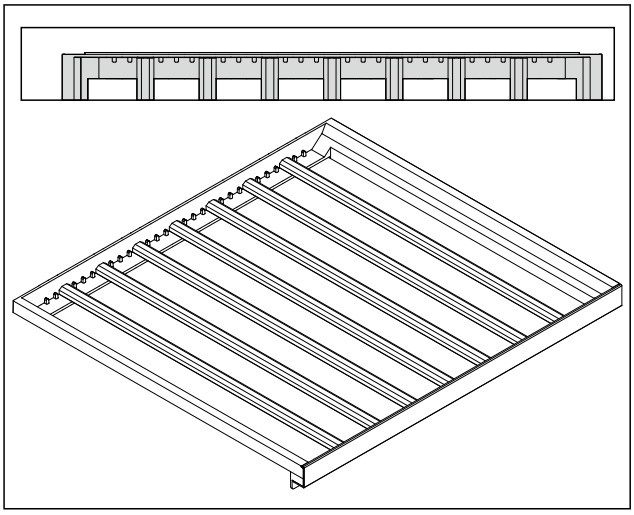

Fig. 144 Arrangement of the bars for maximum number of bottles.

9.2.1 Moving the bar

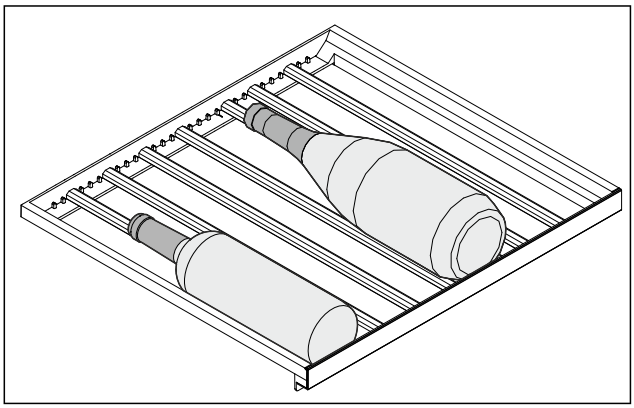

Fig. 145 Example illustration

You can remove the bars in the wooden rack to store larger or smaller bottles.

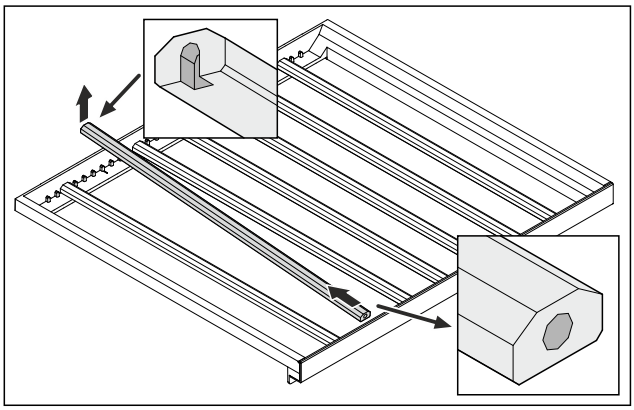

Fig. 146 Example illustration

▶ Lift and pull out the bar at the rear.

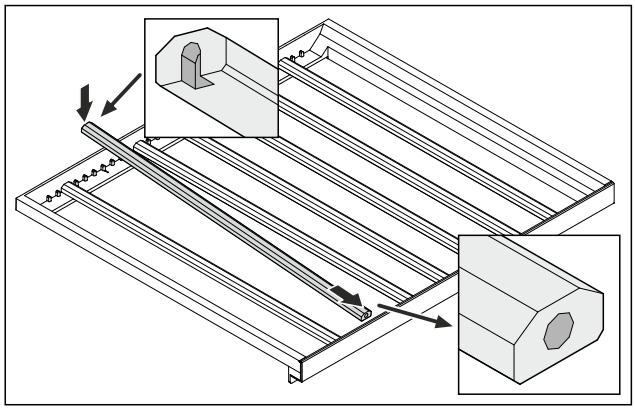

Fig. 147 Example illustration

▶ Insert the bar in the desired position.

9.3 Labels

Description labels as accessories can be purchased from your specialist dealer. You can use these to note the types of wine that are stored in the respective compartment.

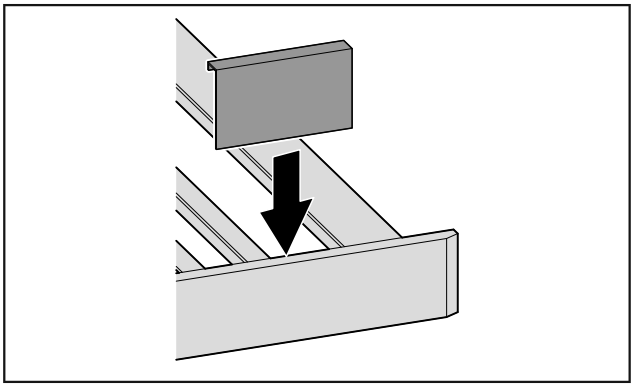

Fig. 148

▶ Attach the label from above.

10 Maintenance

10.1 FreshAir activated carbon filter

Wine is constantly developing according to its ambient conditions, so air quality is essential for preservation.

The FreshAir activated charcoal filter guarantees optimal air quality.

- ❑ Change the activated charcoal filter every 6 months.
- ❑ Dispose of the activated charcoal filter with regular household waste.

Note
FreshAir activated charcoal filters can be purchased from the Liebherr-Hausgeräte store at go.liebherr.com/47wtc4.

10.1.1 Replacing the FreshAir activated charcoal filter

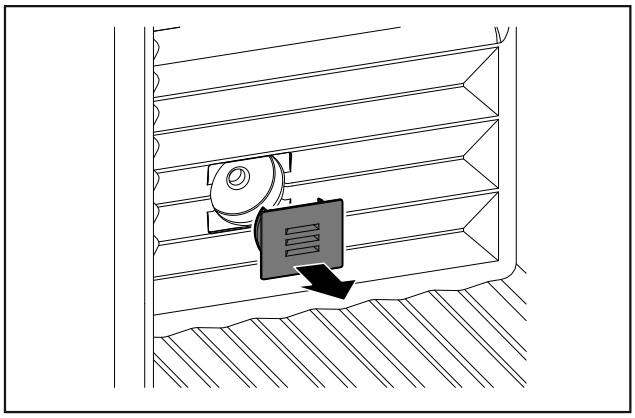

Fig. 149

▶ Pull off the cover.

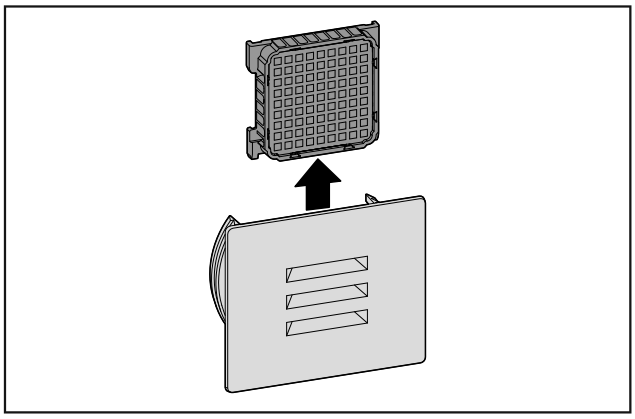

Fig. 150

▶ Pull out the filter.

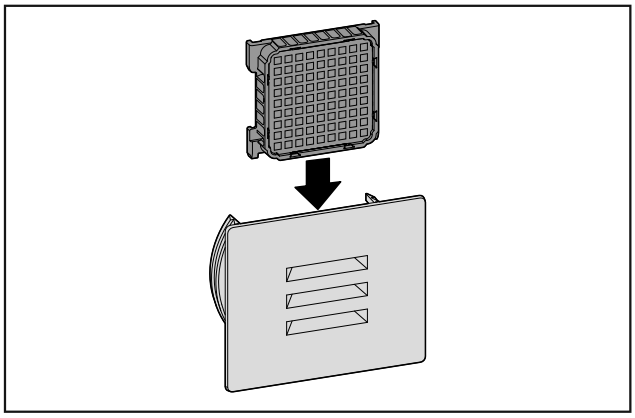

Fig. 151

▶ Insert the new filter.

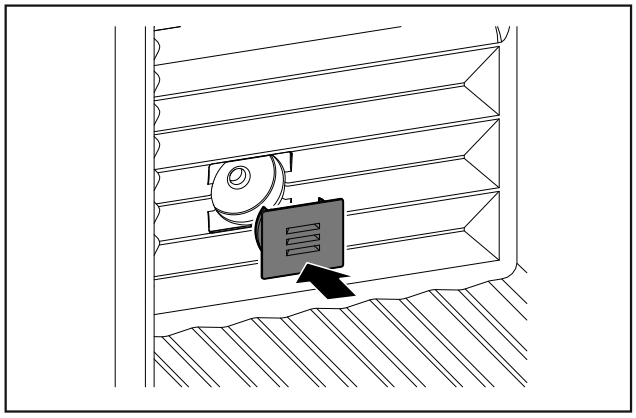

Fig. 152

▶ Set the cover back in place.

10.2 Cleaning the appliance

10.2.1 Preparation

WARNING
Danger of electric shock!
▶ Remove the refrigerator connector or interrupt the power supply.

WARNING
Danger of fire!
▶ Do not damage the refrigeration circuit.

▶ Empty the appliance.
▶ Unplug the mains plug.

10.2.2 Clean the housing

NOTICE
Improper cleaning!
Damage to the appliance.
▶ Only use soft cleaning cloths and ph-neutral all-purpose cleaners.
▶ Do not uses abrasive sponges or steel wool which may cause scratches.
▶ Do not use any sharp or abrasive cleaning agents, nor any that contain sand, chloride or acid.

WARNING
Risk of injury and damage as a result of hot steam!
Hot steam can lead to burns and can damage the surfaces.
▶ Do not use any steam cleaners!

▶ Wipe the housing down with soft, clean cloth. If very dirty, use lukewarm water with a neutral cleaner. Glass surfaces can also be cleaned with glass cleaner.

10.2.3 Cleaning the interior

NOTICE
Improper cleaning!
Damage to the appliance.
▶ Only use soft cleaning cloths and ph-neutral all-purpose cleaners.
▶ Do not uses abrasive sponges or steel wool which may cause scratches.
▶ Do not use any sharp or abrasive cleaning agents, nor any that contain sand, chloride or acid.

▶ Plastic surfaces: clean by hand with a soft clean cloth, lukewarm water and a little detergent.
▶ Metal surfaces: clean by hand with a soft clean cloth, lukewarm water and a little detergent.
▶ Drain hole: remove deposits using a thin item (for example a cotton bud).

10.2.4 Cleaning the equipment

NOTICE
Improper cleaning!
Damage to the appliance.
▶ Only use soft cleaning cloths and ph-neutral all-purpose cleaners.
▶ Do not uses abrasive sponges or steel wool which may cause scratches.
▶ Do not use any sharp or abrasive cleaning agents, nor any that contain sand, chloride or acid.

Cleaning with a damp, lint-free cloth:

- Bottle shelf

▶ Clean the equipment.

10.2.5 After cleaning

▶ Wipe the appliance and the components dry.
▶ Connect and switch on the appliance.
▶ Repeat cleaning regularly.

11 Customer help

11.1 Technical specifications

Temperature range	
Cooling	5 °C to 20 °C

Maximum loading weight for the bottle rack	
Bottle shelf	60 kg
Bottle rack with telescopic rails	25 kg

Lighting	
Class[1]	Light source
This product contains one or more energy efficiency class G light sources.	LED

[1] *The appliance may contain light sources with different energy efficiency classes. The lowest energy efficiency class is indicated.*

For appliances with a WiFi connection:*

Frequency specification*	
Frequency band	2.4 GHz
Maximum radiated power	< 100 mW
Purpose of the wireless equipment	Integration in the local WiFi network for data communication

11.2 Operating noise

The appliance makes different noises when it is on.

- At **higher temperatures** the appliance uses less energy but works for longer. It is **quieter**.
- With **high cooling capacity**, food is cooled more quickly. The sound is **louder**.

Examples:
- Functions on (see 8.2 Appliance functions)
- Fan running
- Food recently added
- High ambient temperature
- Door open for a while

Noise	Possible cause	Type of noise
Bubbling and splashing	Coolant flowing into the cooling circuit.	Normal operating noise
Hissing	Coolant sprays into the cooling circuit.	Normal operating noise
Humming	The appliance is cooling. The volume depends on the cooling output.	Normal operating noise
Humming and rustling	The fan is running.	Normal operating noise
Clicking	Components are switched on and off.	Normal switching noise
Rattling or humming	Valves or flaps are working.	Normal switching noise

Noise	Possible cause	Type of noise	Lifting
Vibration	Improper setup	Defective noise	Level the appliance using the adjustable feet.
Rattling	Components, items inside the appliance	Defective noise	Secure components. Leave enough space between the items.

11.3 Technical fault

Your appliance is designed and built to ensure it works reliably and has a long service life. In the unlikely event that a fault occurs during operation, please check whether it is due to an operating error. If so, you will be charged for the callout and repair costs even if it falls within the warranty period.

You can fix the following faults yourself.

11.3.1 Appliance function

Defect	Cause	Remedy
The appliance is not working.	→ The appliance is not switched on.	▶ Switch the appliance on.
	→ The power plug is not properly plugged into the socket.	▶ Check the power plug.
	→ There is something wrong with the power outlet fuse.	▶ Check the fuse.
	→ Power cut	▶ Keep the appliance closed.
	→ The IEC socket is not plugged into the appliance correctly.	▶ Check the IEC socket.
Temperature is not cold enough.	→ The appliance door is not closed properly.	▶ Close the appliance door.
	→ The ambient temperature is too high.	▶ Problem solution: (see 1.8 Climate classes)
	→ The appliance was opened too many times or for too long.	▶ Wait to see if the required temperature corrects itself. If not, contact Customer Service. (see 11.4 Customer Service)
	→ The temperature is set incorrectly.	▶ Turn down the temperature and check after 24 hours.
	→ The appliance is too close to a heat source (oven, radiator, etc).	▶ Move the appliance or the heat source.
The door seal is defective or needs to be replaced for another reason.	→ The door seal can be replaced. It can be replaced without the need for special tools.	▶ Contact Customer Service. (see 11.4 Customer Service)
The appliance builds up too much ice or condensation.	→ The door seal may have slipped out of its groove.	▶ Check that the door seal is well fitted in the groove.
The exterior surfaces of the	→ The heat of the refrigeration circuit is used to avoid condensation.	▶ This is normal.

Defect	Cause	Remedy
appliance are warm.*		

11.3.2 Features

Defect	Cause	Remedy
Mould on the wine bottles	→ Similar to other types of bearing, a slight layer of mould can form depending on the type of adhesive used for the label.	▶ Remove any adhesive residues.
The internal light does not come on.	→ The appliance is not switched on.	▶ Switch the appliance on.
	→ The door was open for longer than 15 minutes.	▶ Interior lighting switches off automatically after about 15 minutes when the door is open.
	→ The LED interior light is faulty or the lid is damaged.	▶ Contact Customer Service. (see 11.4 Customer Service)

11.4 Customer Service

First check whether you can rectify the fault yourself (see 11 Customer help) . If you cannot rectify the problem, contact Customer Service.

You can find the address in the enclosed brochure “Liebherr-Service” or at home.liebherr.com/service.

WARNING
Unprofessional repair!
Injuries.
- ▶ Have any repairs and action - not expressly specified - on the appliance and mains cable carried out by service personnel only. (see 10 Maintenance)
- ▶ A damaged mains cable may only be replaced by the manufacturer, the manufacturer’s Customer Service or a similarly qualified person.
- ▶ In the case of appliances with an IEC connector, the change may be made by the customer.

11.4.1 Contacting Customer Service

Make sure that the following appliance information is available:

- ❑ Appliance designation (model and index)
- ❑ Service no. (Service)
- ❑ Serial no. (S no.)

▶ Call up the appliance information via the display.
-or-
▶ Refer to the type plate for appliance information. (see 11.5 Model plate)

▶ Note down the appliance information.
▶ Notify customer service: Report errors and the appliance information.
▷ This will help us to provide you with a faster, more accurate service.
▶ Follow further instructions from Customer Service.

11.5 Model plate

The type plate is located on the bottom left of the inside of the appliance.

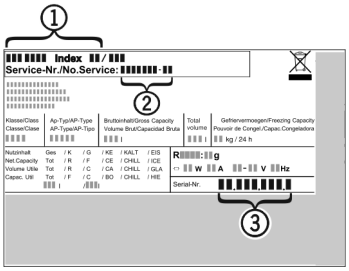

Fig. 153
(1) Appliance description **(3)** Serial no.
(2) Service no.
▶ Note the data on the model plate.

12 Shutting down

- ▶ Empty the appliance.
- ▶ Switch off appliance. (see 8.2.2 Switching appliance on and off)
- ▶ Pull the mains plug out of the socket.
- ▶ Remove the IEC socket if required: Pull the IEC socket out of the appliance plug and move it to the left and right at the same time.
- ▶ Clean appliance. (see 10.2 Cleaning the appliance)
- ▶ Leave the door open, so that no unpleasant odours arise.

13 Disposal

Ensure that the following requirements are met:

- ❑ Meaning of the symbols on the appliance: are familiar.
- ❑ Notes on disposal are familiar. (see 1.6 Information concerning disposal)

13.1 Preparing the appliance for disposal

▶ Shutting your appliance down. (see 12 Shutting down)

13.2 Disposing of the appliance in an environmentally friendly manner

WARNING
Risk of fire due to leaking refrigerant and oil!
The refrigerant inside the appliance is environmentally friendly, but flammable. The oil it contains is also flammable. Escaping refrigerant and oil can ignite in high concentrations and in contact with an external heat source.
- ▶ Do not damage the refrigerant circuit pipes or the compressor.

- ▶ Observe the notes on transporting the appliance. (see 3.4 Transporting the appliance)
- ▶ Remove the appliance without damaging it.
- ▶ Dispose of appliance according to specifications.

Scan QR Code and find digital operating and installation instructions.

home.liebherr.com

20261009 7083982-00

Liebherr-Hausgeräte GmbH
Memminger Straße 77-79
88416 Ochsenhausen
Deutschland