Installation Guide

Quality, Design and Innovation

home.liebherr.com/fridge-manuals

LIEBHERR

Contents

1 General safety instructions ... 3

2 Installation requirements ... 3
2.1 Installation site ... 3
2.2 Position in space ... 3
2.3 Insert under worktop ... 3

3 Appliance dimensions ... 4

4 Recess dimensions ... 4

5 Unit front ... 5
5.1 Unit front weight ... 5
5.2 Unit door ... 5
5.3 Unit front dimensions ... 5
5.4 Profile frame dimensions ... 5

6 Transporting the appliance ... 6
6.1 Transporting the appliance for initial use ... 6
6.2 Transporting the appliance after initial use ... 6

7 Unpacking the appliance ... 6

8 Replacing the door hinge with bearing bracket hinge ... 6
8.1 Safety instructions ... 6
8.2 Tool ... 6
8.3 Scope of supply ... 6
8.4 Removing covers ... 6
8.5 Removing the door ... 7
8.6 Removing the hinge ... 7
8.7 Converting the hinge ... 8
8.8 Relocating the upper cover ... 8
8.9 Relocating the lower cover ... 9
8.10 Relocating the door stopper* ... 9
8.11 Fitting the hinges ... 9
8.12 Relocating the upper bracket ... 10
8.13 Relocating the bottom bracket ... 10
8.14 Fitting the door ... 11
8.15 Putting on the covers ... 11

9 Replacing the door hinge with multi-joint hinge (not decor-compatible) ... 12
9.1 Safety instructions ... 12
9.2 Tool ... 12
9.3 Removing covers ... 12
9.4 Removing the door ... 13
9.5 Removing the hinge ... 13
9.6 Converting the hinge ... 13
9.7 Swapping covers ... 14
9.8 Relocating the door stopper ... 14
9.9 Fitting the hinges ... 15
9.10 Relocating the upper bracket ... 15
9.11 Relocating the bottom bracket ... 15
9.12 Fitting the door ... 16
9.13 Putting on the covers ... 16

10 Replacing door hinge with multi-joint hinge (decor-compatible) ... 17
10.1 Safety instructions ... 17
10.2 Tool ... 17
10.3 Removing covers ... 17
10.4 Removing the door ... 18
10.5 Removing the hinge ... 18
10.6 Relocating the door stopper ... 19
10.7 Fitting the hinges ... 19
10.8 Relocating the upper bracket ... 20
10.9 Relocating the bottom bracket ... 20
10.10 Fitting the door ... 21
10.11 Putting on the covers ... 21

11 Aligning the door hinge with bearing bracket hinge ... 21

12 Aligning the door hinge with multi-joint hinge (not decor-compatible) ... 22

13 Recessed installation ... 22
13.1 Tool ... 22
13.2 Scope of supply ... 22
13.3 Preparing the appliance ... 23
13.4 Screwing the appliance to the ceiling ... 23
13.5 Fixing the appliance on the side ... 23
13.6 Aligning the appliance ... 24
13.7 Fitting the base ... 24
13.8 Screwing the appliance into the niche ... 24

14 Fitting the unit door ... 25

15 After installation ... 26

16 Connecting the appliance to the power supply ... 27

17 Disposing of packaging ... 27

The manufacturer is continually working on the further development of all types and models. Please be aware that we reserve the right to make changes to the shape, equipment and technology.

Symbol	Explanation
	Read instructions Please read the information in these instructions carefully to understand all of the benefits of your new appliance.
	Additional information on the Internet The digital manual with additional information and in other languages can be found via the QR code on the front of the manual or by entering the service number at **home.liebherr.com/fridge-manuals**. The service number can be found on the serial tag: 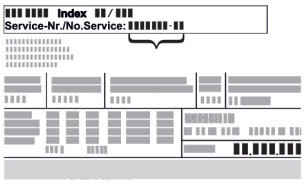 *Fig.* Example illustration
	Check appliance Check all parts for transport damage. If you have any complaints, please contact your agent or customer service.
	Differences These instructions apply to a range of models, so differences are possible. Sections that apply to certain models only are marked with an asterisk (*).
	Instructions and results Instructions are marked with a ▶. Results are marked with a ▷.
	Videos Videos about the appliances are available on the YouTube channels of Liebherr-Hausgeräte.

Open source licences:

The appliance contains software components that use open source licences. Information on the open source licences used can be found here: **home.liebherr.com/open-source-licences**

*** Depending on model and options**

1 General safety instructions

- Please keep this assembly manual in a safe place so you can refer back to it at any time.
- If you pass the appliance on, please hand this assembly manual to the next user.
- Read this assembly manual carefully before installation and use to ensure safe and correct use of the appliance. Follow the instructions, safety instructions and warning messages included at all times. They are important for ensuring you can operate and install the appliance safely and without any problems.
- First read the general safety instructions in the "General safety instructions" section of the **operating instructions**, which accompany these installation instructions, and follow them. If you cannot find the **operating instructions**, you can download the **operating instructions** from the internet by entering the service number at **home.liebherr.com/fridge-manuals**. The service number can be found on the serial tag:

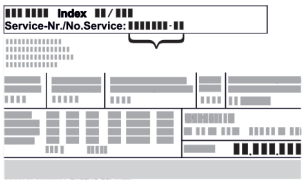

- **Observe the warning messages and other detailed information in the other sections when installing the appliance:**

⚠	DANGER	identifies a situation involving direct danger which, if not obviated, may result in death or severe bodily injury.
⚠	WARNING	identifies a dangerous situation which, if not obviated, may result in death or severe bodily injury.
⚠	CAUTION	identifies a dangerous situation which, if not obviated, may result in minor or medium bodily injury.
	NOTICE	identifies a dangerous situation which, if not obviated, may result in damage to property.
	Note	identifies useful instructions and tips.

2 Installation requirements

The installation conditions are crucial to ensure that you can operate your appliance safely, efficiently and without problems.

- Observe all safety instructions.
- Consider the location and position in the room.

⚠ **WARNING**

Danger of fire due to incorrect positioning!

▶ Make sure the mains cable is not trapped under the appliance when you position the appliance.

▶ Position the appliance so that it does not touch the plug or mains cable.

▶ Do not connect any appliances to sockets in the area of the back of the appliance.

▶ Do **not** place and operate multi-sockets/power distributors and other electronic devices (such as halogen transformers) at the back of the appliances.

⚠ **WARNING**

Fire hazard due to dampness!

If live parts or the mains lead become damp this may cause short circuits.

▶ The appliance is designed for use in enclosed areas. Do not operate the appliance outdoors or in areas where it is exposed to splash water or damp conditions.

⚠ **WARNING**

Risk of fire due to leaking refrigerant and oil!

The refrigerant inside the appliance is environmentally friendly, but flammable. The oil it contains is also flammable. Escaping refrigerant and oil can ignite in high concentrations and in contact with an external heat source.

▶ Do not damage the refrigerant circuit pipes or the compressor.

2.1 Installation site

- Only set up and use the appliance in enclosed spaces.
- Only operate the appliance when it is installed.
- If the appliance is installed in a very damp environment, condensation may form on the appliance exterior. Always make sure there is good ventilation and aeration at the installation site.
- The more refrigerant there is in the appliance, the larger than room must be in which it is located. In rooms that are too small, a leak can product a flammable gas/air mixture. For every 8 g of refrigerant, the installation room must be at least 1 m^3 in size. Information on the refrigerant contained is given on the type plate inside the appliance.
- The floor on which the appliance stands must be horizontal and level.

2.2 Position in space

- Do not install the appliance in direct sunlight or near radiators or similar sources of heat.
- You can install the appliance directly next to an oven.
- If the appliance is installed directly next to an oven, the energy consumption may increase slightly. This is dependent on the service life and usage intensity of the oven.
- Do not operate the appliance in the vicinity of magnetic fields or place magnetic objects near the appliance. It can lead to unwanted door openings.*
- If you install the appliance in a island unit, appliances with an integrated exhaust air system can damage the appliance. Either ensure separate air ducting or install a partition wall between the appliances.
- Use in hazardous areas is not permitted.

2.3 Insert under worktop

- If you are installing the appliance in a kitchen unit that is standing on uneven ground: Levelling kitchen furniture.

3 Appliance dimensions

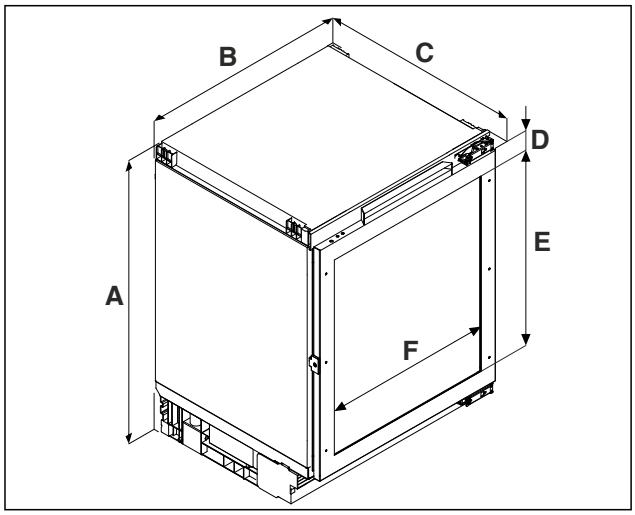

Fig. 1 Example illustration: ..pr

(A) Appliance height including feet
(B) Appliance width
(C) Appliance depth

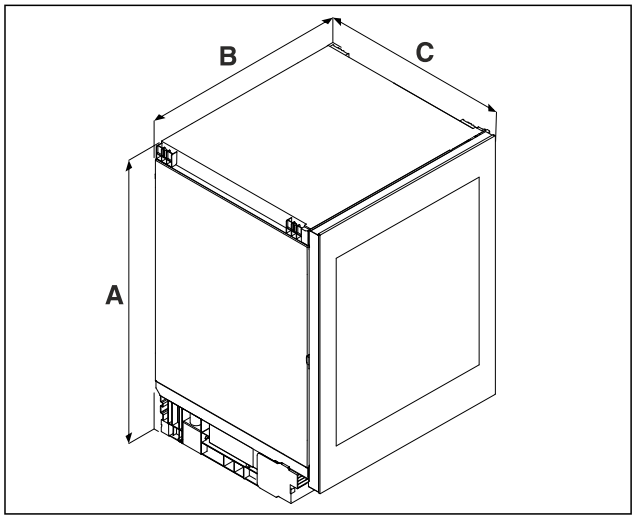

Fig. 2 Example illustration: ..gb

(A) Appliance height including feet
(B) Appliance width
(C) Appliance depth

	UW.. 36..[A)]	**UW.. 37..**[A)]
A	819 mm	859 mm
B	597 mm	
C	**UW..pr:**[A)] 564 mm **UW..gb ..3.:**[A)] 576 mm* **UW..gb ..8.:**[A)] 580 mm*	
D	98 mm	
E	524 mm	568,5 mm
F	458 mm	

[A)] Appliance type designation

4 Recess dimensions

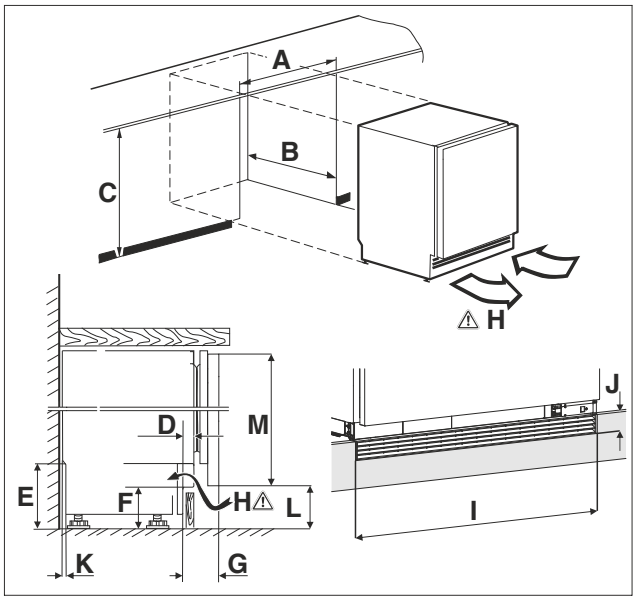

Fig. 3 Example illustration: UW..gb

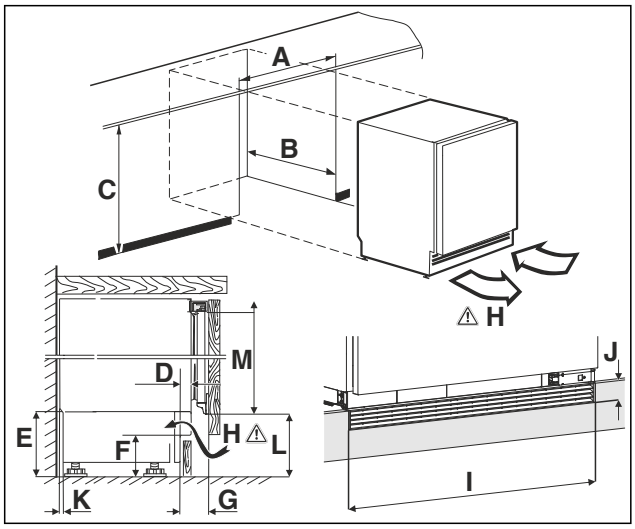

Fig. 4 Example illustration: UW..pr

(A) Niche width
(B) Niche depth
(C) Niche height
(H) Ventilation cross-section

A	600 mm	
B	min. 565 mm	
C	**UW.. 36..:**[A)] 820 mm to 880 mm	**UW.. 37..:**[A)] 860 mm to 920 mm
D	11 mm to 66 mm	
E	100 mm to 160 mm	
F	60 mm to 120 mm	
G	**UW..pr:**[A)] 45 mm to 100 mm **UW..gb ..3.:**[A)] 57 mm to 112 mm **UW..gb ..8.:**[A)] 61 mm to 116 mm	
H	150 cm²	
I	600 mm	

*** Depending on model and options**

J	40 mm	
K	35 mm	
L	**UW..pr 36..:**[A] 104 mm to 164 mm **UW..gb ..36.:**[A] 100 mm to 160 mm	**UW..pr 37..:**[A] 104 mm to 164 mm **UW..gb 37.:**[A] 81 mm to 141 mm
M	**UW..pr 366.:**[A] 707 mm **UW..pr 367.:**[A] 704 mm **UW..gb ..36.:**[A] 717 mm	**UW..pr 37..:**[A] 747 mm **UW..gb 37.:**[A] 776 mm

[A] Appliance type designation

5 Unit front

5.1 Unit front weight

NOTICE
A heavy unit door may pose a risk of damage!
If the unit door is too heavy, damage to the hinges cannot be ruled out, which may compromise functionality.
▶ Before fitting the unit door, ensure that the unit door does not exceed the permissible weight.

Niche height	Maximum weight of the unit door
.. 36..[A]	10 kg
.. 37..[A]	10 kg

[A] Appliance type designation

5.2 Unit door

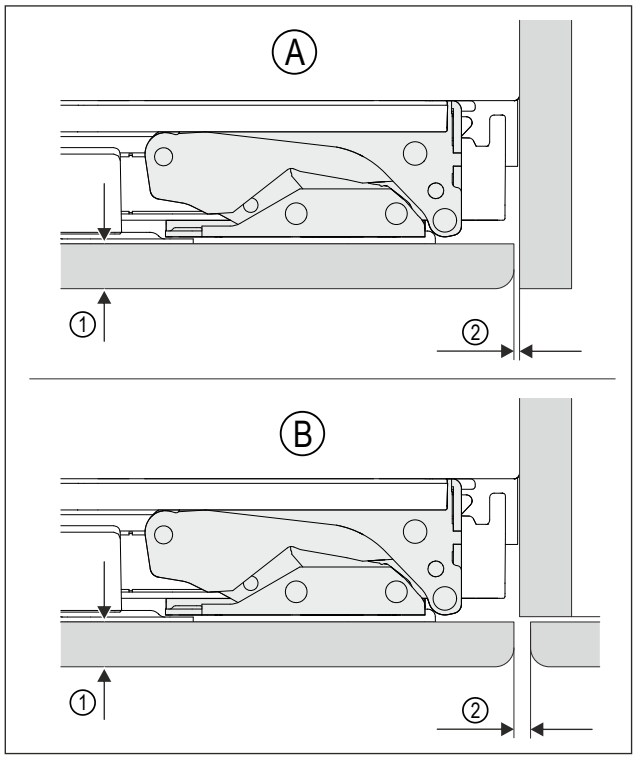

Fig. 5 Example illustration

(A) Niche with wall
(B) Niche with neighbouring furniture
(1) Front thickness
(2) Gap dimension

Front thickness	At least 16 mm to max. 19 mm
Gap dimension	At least 3 mm
The unit door must be flat and mounted without tension.	

5.3 Unit front dimensions

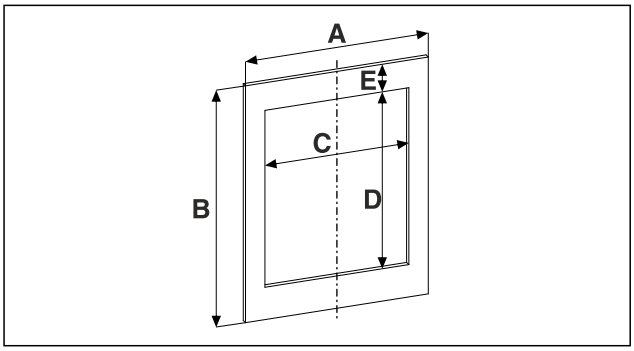

Fig. 6

Niche height	.. 36..	.. 37..
A	At least 595 mm	
B	At least 707 mm	At least 747 mm
C	458 mm	
D	524 mm	568.5 mm
E	Dimensions depends on the installation situation in the niche. You can calculate it with the cut-out dimensions of the glass door front. (see 3 Appliance dimensions)	
Values C, D and E do not apply to appliances without a glass door.		

[A] Appliance type designation

5.4 Profile frame dimensions

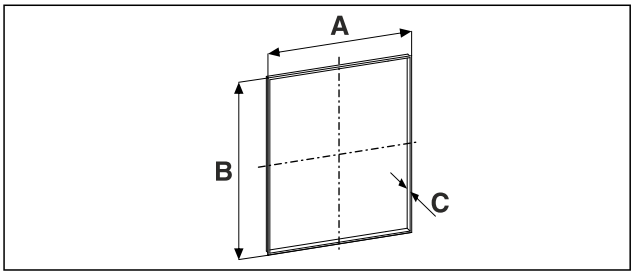

Fig. 7

Niche height	.. 36..	.. 37..
A	458 mm	
B	524 mm	568.5 mm
C	**With panel thickness 19 mm:** 21 mm	

[A] Appliance type designation

A = Internal dimensions for cut-out in unit front profile frame mounting

B = Internal dimensions for cut-out in unit front profile frame mounting

C = Profile frame thickness

6 Transporting the appliance

6.1 Transporting the appliance for initial use

Ensure that the following requirements are met:

- ❑ The appliance is packaged.
- ❑ The appliance is upright.

▶ Transport the appliance with the help of two people.
▶ Unpacking the appliance. (see 7 Unpacking the appliance)

6.2 Transporting the appliance after initial use

Observe the following instructions if you wish to transport or move the appliance again after initial use.

Ensure that the following requirements are met:

- ❑ The appliance is emptied.
- ❑ The appliance is upright.
- ❑ Appliance with door(s): Door is secured against accidental opening.
- ❑ Appliance with telescopic unit: The telescopic unit is secured against accidental opening.
- ❑ Appliance is removed.

▶ Transport the appliance with the help of two people.

7 Unpacking the appliance

NOTICE
Risk of damage if the unit is moved!
If you move the unit across the floor without any protection, it may damage the floor.
▶ Make sure you cover the floor properly before removing the packaging from the unit.

▶ Check the appliance and packaging: If you suspect that the goods have been damaged in transit, please contact the supplier before connecting them.

NOTICE
Damage to property caused by pointed or sharp objects!
Using pointed or sharp objects when removing packaging material may damage the appliance.
▶ Do not use any pointed or sharp objects to remove the packaging material.

▶ Remove the packaging materials.

8 Replacing the door hinge with bearing bracket hinge

8.1 Safety instructions

WARNING
Risk of injury if the door is not reversed correctly!
▶ Replace the door hinge with specialist personnel.

WARNING
Risk of injury and material damage due to door weight!
▶ Only change the door hinge if you can carry a weight of 15 kg.
▶ Change the door hinge with two people.

NOTICE
Live parts!
Damage to electrical components.
▶ Remove the mains plug before you reverse the door.

8.2 Tool

8.3 Scope of supply

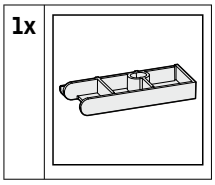

8.4 Removing covers

▶ Open the door.

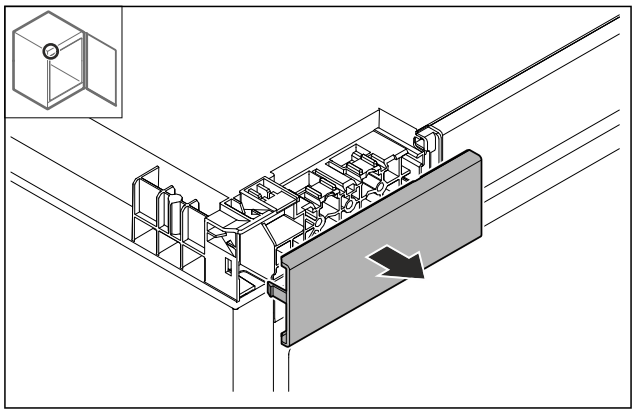

Fig. 8

▶ Remove cover.

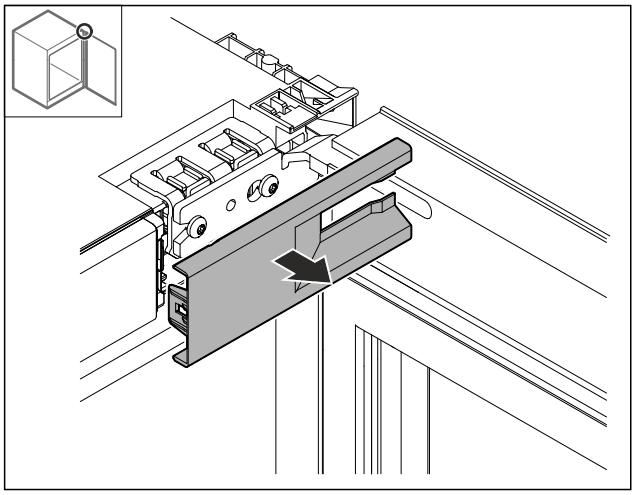

Fig. 9

▶ Remove cover.

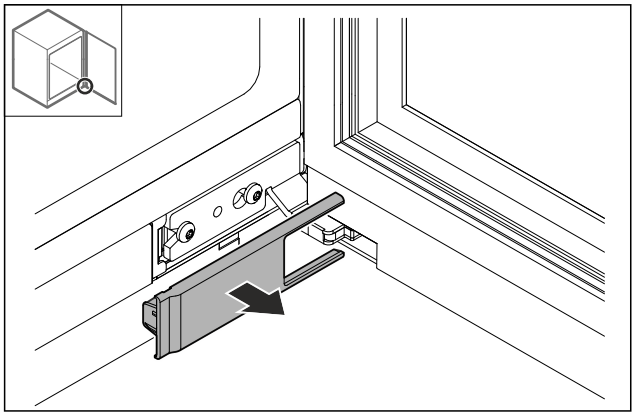

Fig. 10

▶ Remove cover.

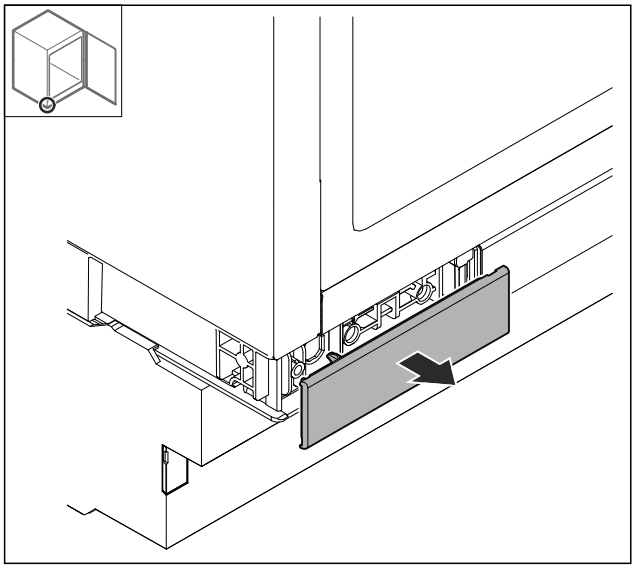

Fig. 11

▶ Remove cover.

8.5 Removing the door

NOTICE

Risk of injury if the door tips out!

▶ Hold the door.

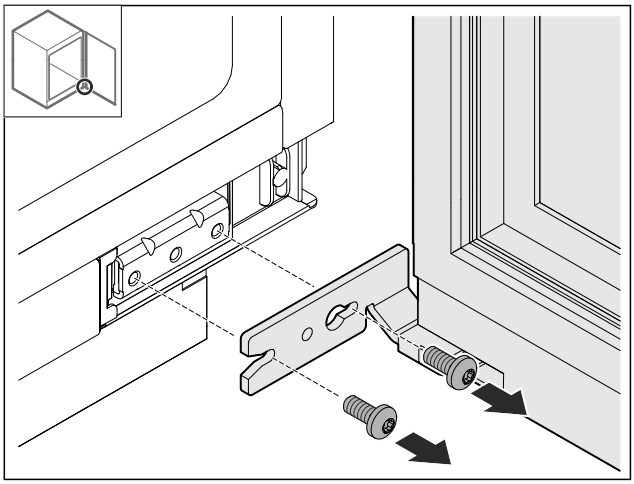

Fig. 12

▶ Loosen screws at bottom.

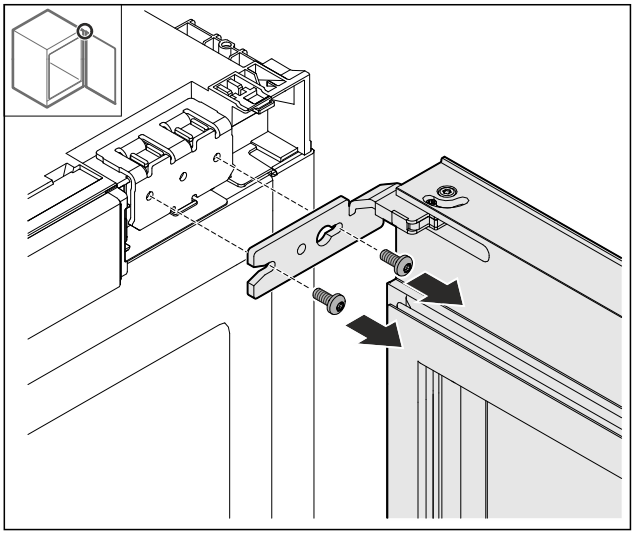

Fig. 13

▶ Loosen screws at top.

▶ Remove the door.

▶ Place the door on a soft surface.

8.6 Removing the hinge

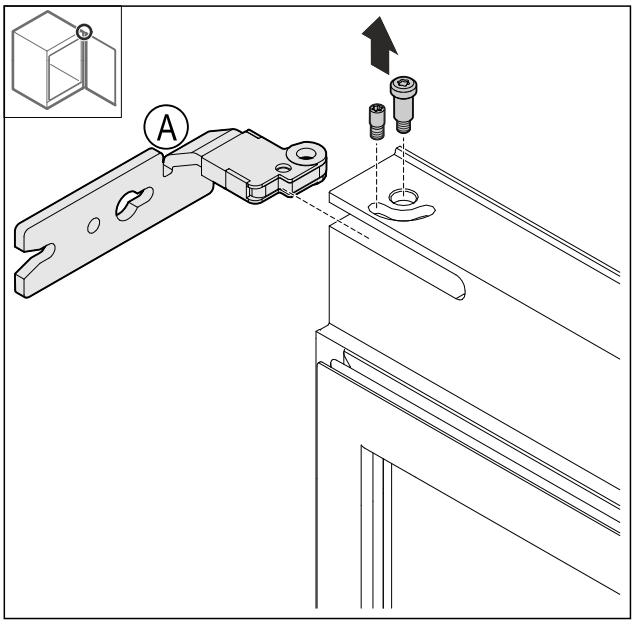

Fig. 14

▶ Unscrew the bolt.

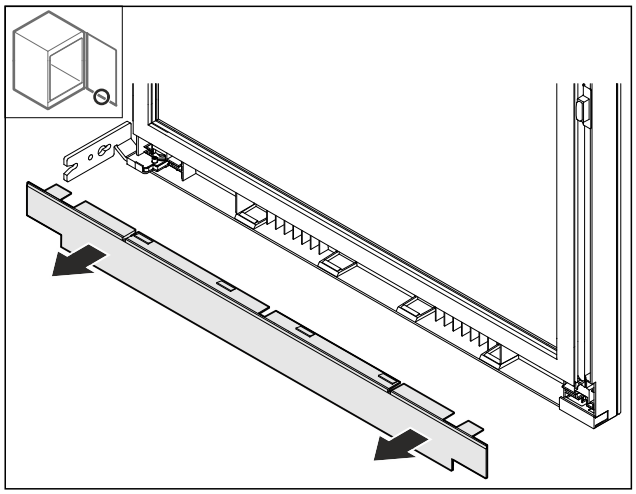

Fig. 15

▶ Remove cover.

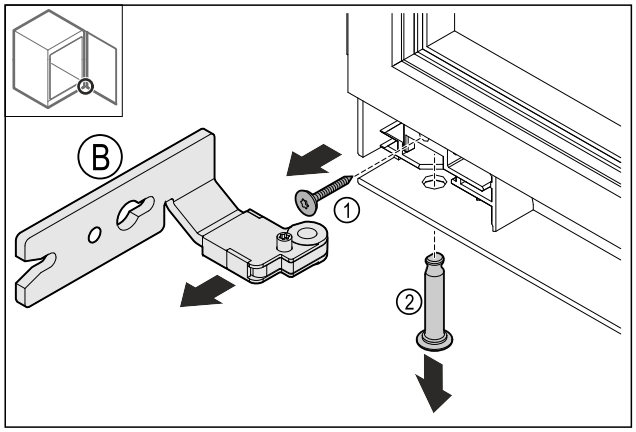

Fig. 16

▶ Remove the screw *Fig. 16 (1)*.
▶ Remove the bolt *Fig. 16 (2)*.
▶ Remove the hinge *Fig. 16 (B)*.

8.7 Converting the hinge

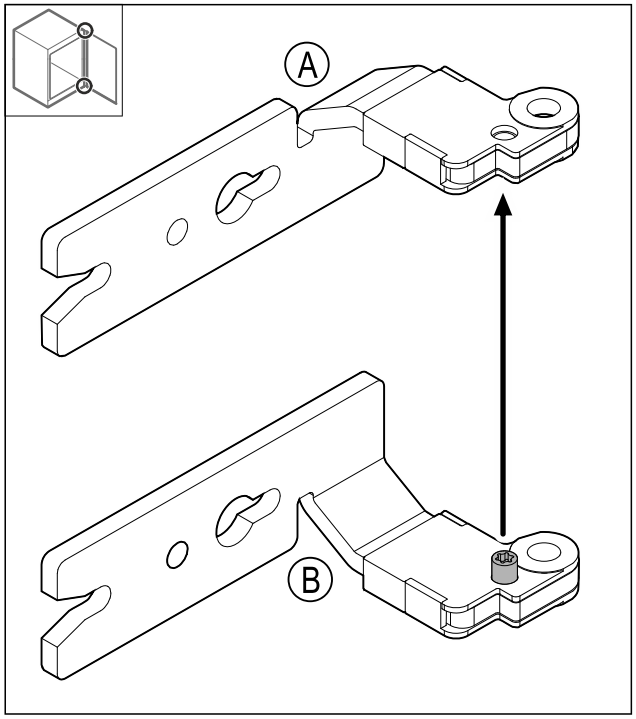

Fig. 17

▶ Relocate the screw.

8.8 Relocating the upper cover

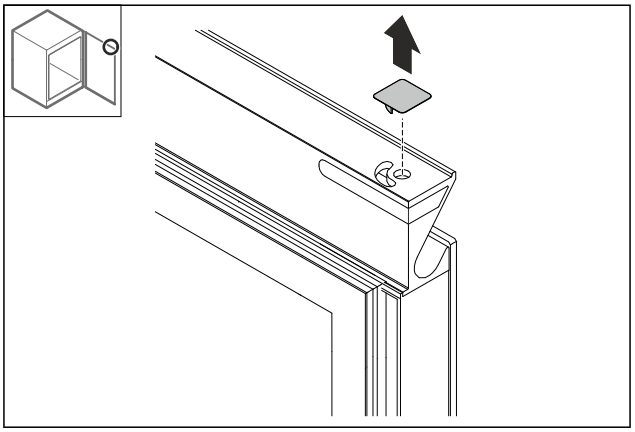

Fig. 18

▶ Remove the cover.

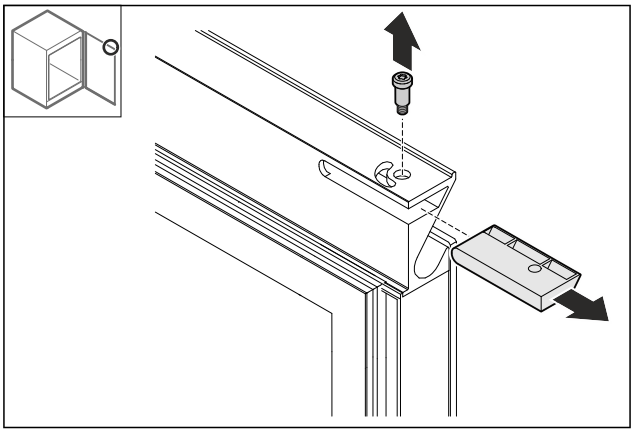

Fig. 19

▶ Remove the bolts.
▶ Remove the cover.
▶ Recommendation: Keep the cover for later use.

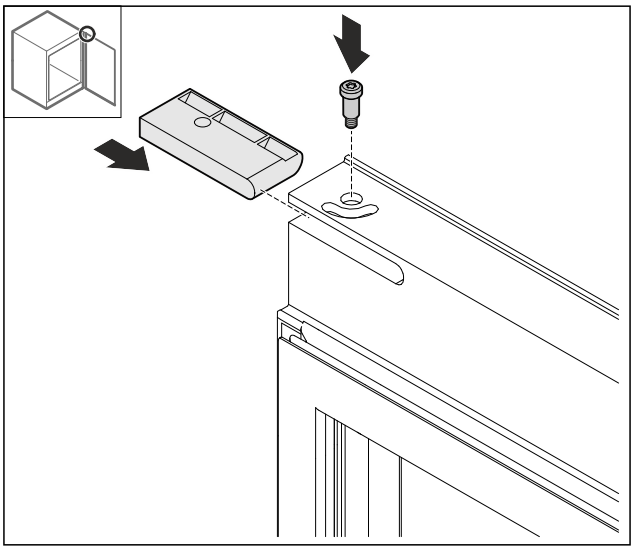

Fig. 20

▶ Insert the cover from the accessory pack.
▶ Tighten the bolt.

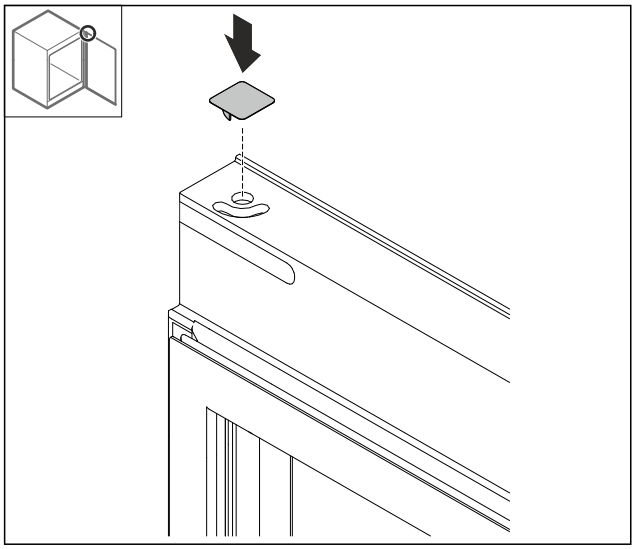

Fig. 21

▶ Insert the cover.

8.9 Relocating the lower cover

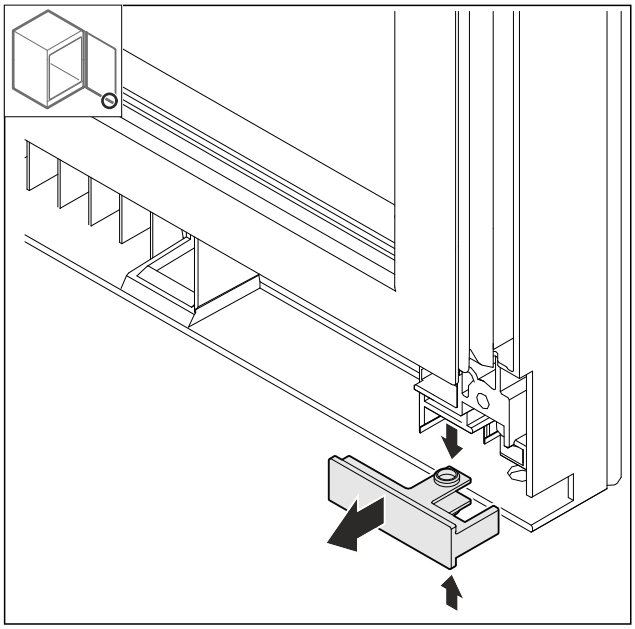

Fig. 22

▶ Gently press the top and bottom of the cover together and pull it out forwards.

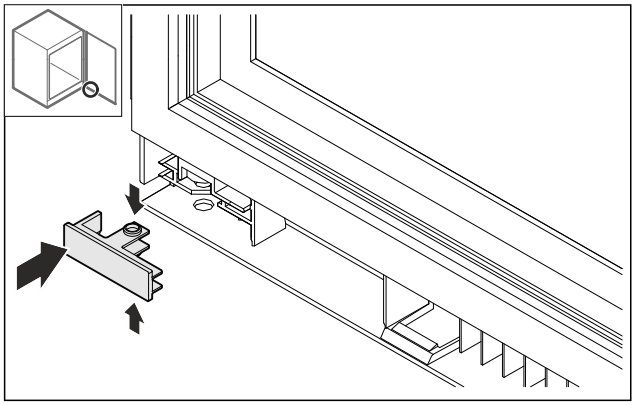

Fig. 23

▶ Turn the cover 180° and insert it on the opposite side.

8.10 Relocating the door stopper*

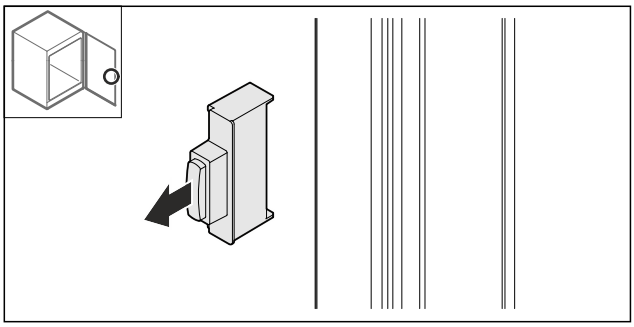

Fig. 24

▶ Pull out the door stopper.

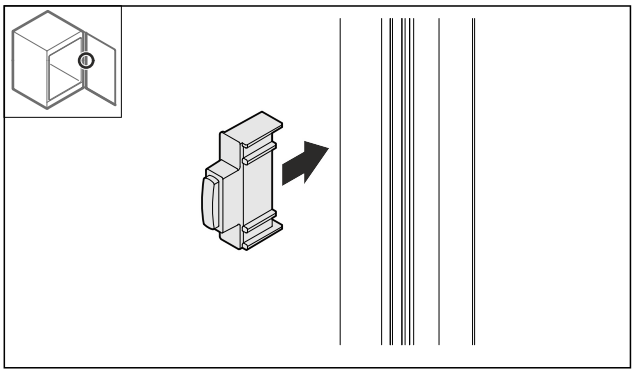

Fig. 25

▶ Insert the door stopper rotated by 180° on the opposite side.

8.11 Fitting the hinges

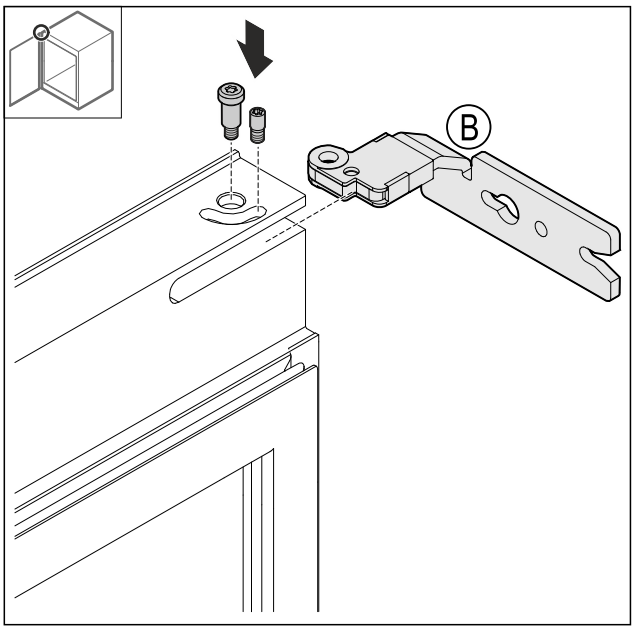

Fig. 26

▶ Fit the upper hinge.

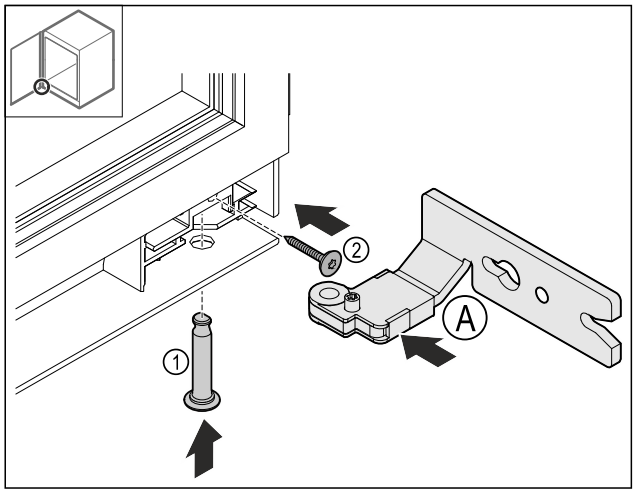

Fig. 27

▶ Insert the lower hinge *Fig. 27 (A)*.
▶ Insert and hold the bolt in place *Fig. 27 (1)*.
▶ Screw the screw *Fig. 27 (2)* tight.

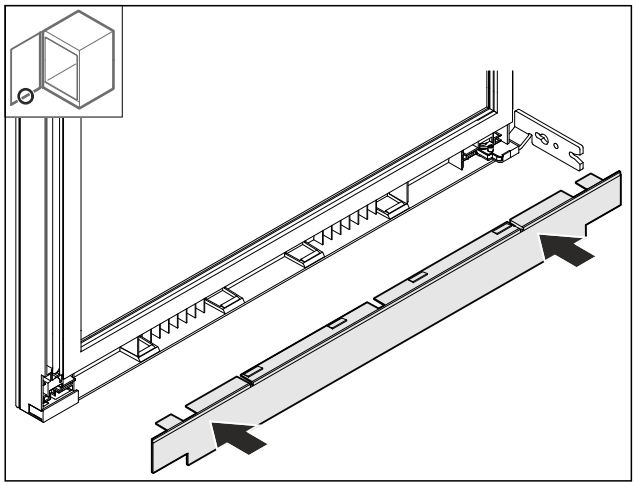

Fig. 28

▶ Put on the cover.

8.12 Relocating the upper bracket

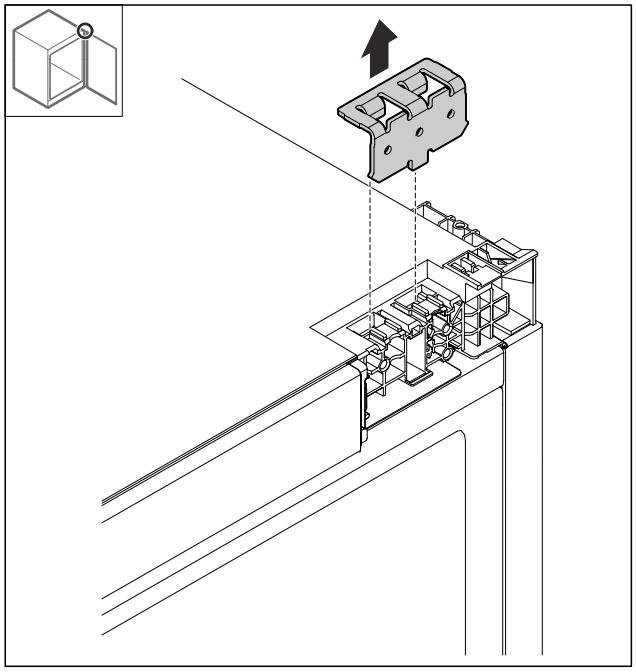

Fig. 29

▶ Remove the bracket.

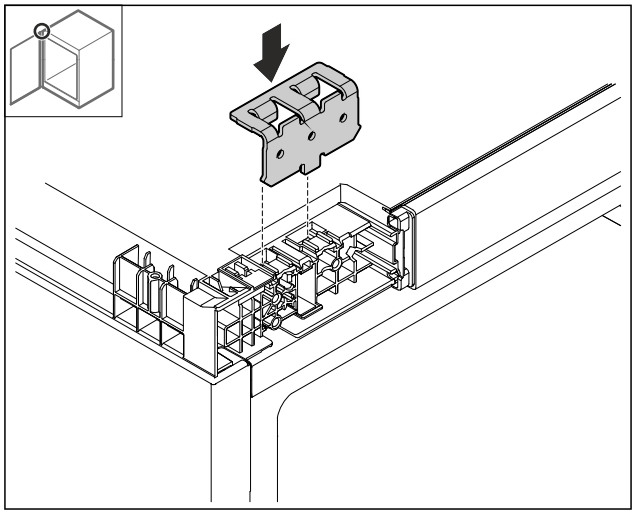

Fig. 30

▶ Insert the bracket.

8.13 Relocating the bottom bracket

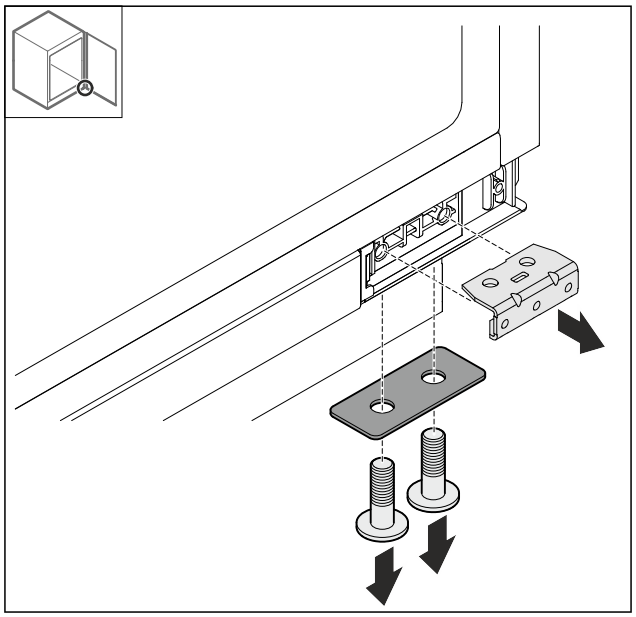

Fig. 31

▶ Detach the bracket.

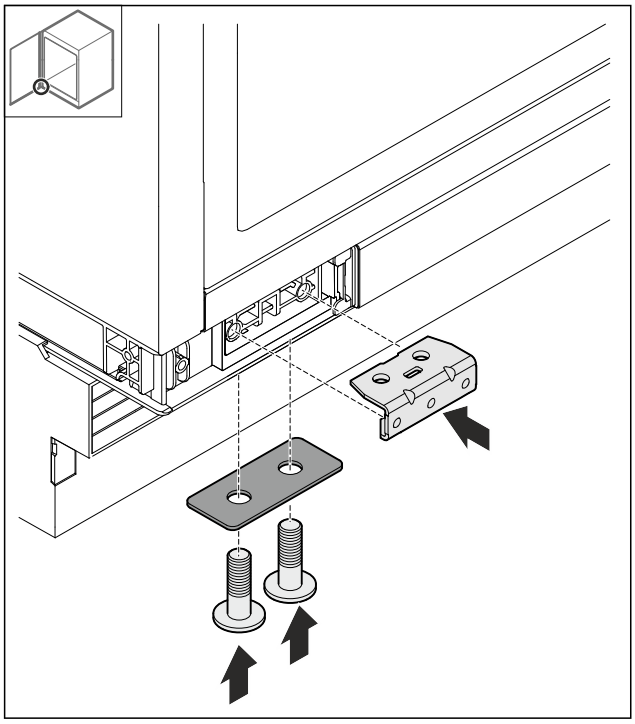

Fig. 32

▶ Fit the bracket.

8.14 Fitting the door

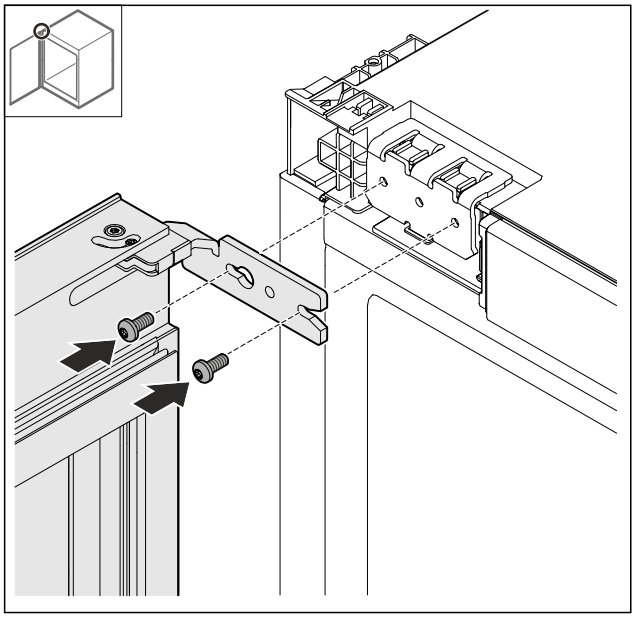

Fig. 33

▶ Screw on door at the top.

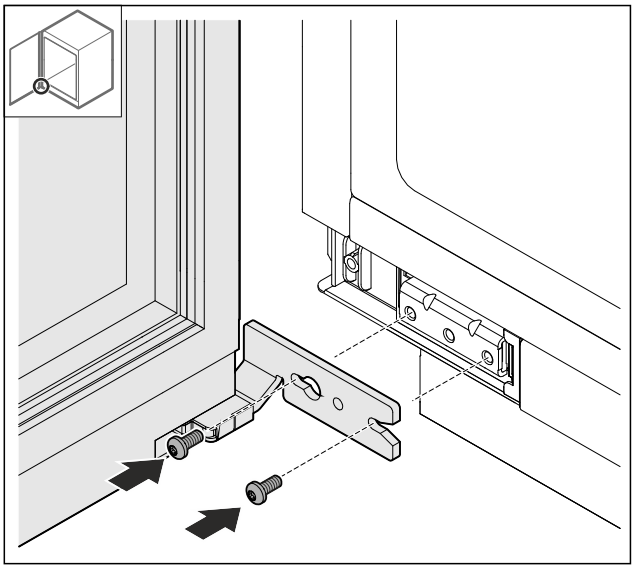

Fig. 34

▶ Screw on door at the bottom.

8.15 Putting on the covers

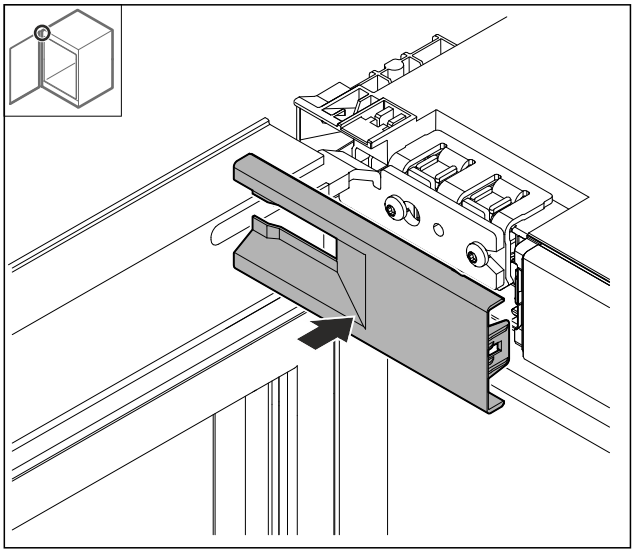

Fig. 35

▶ Put on the cover.

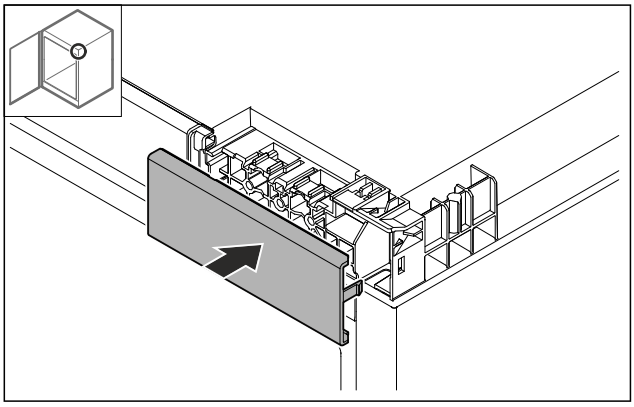

Fig. 36

▶ Put on the cover.

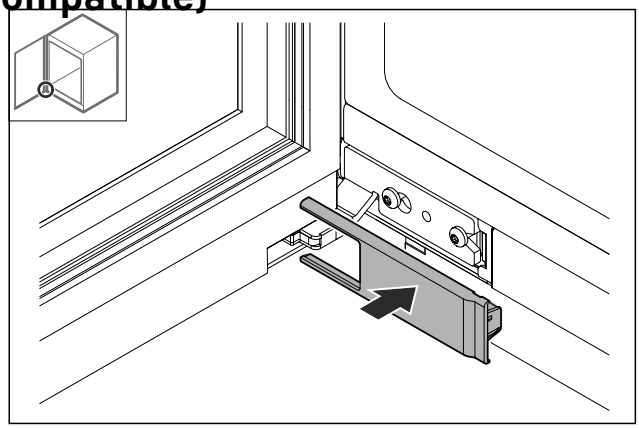

Fig. 37

▶ Put on the cover.

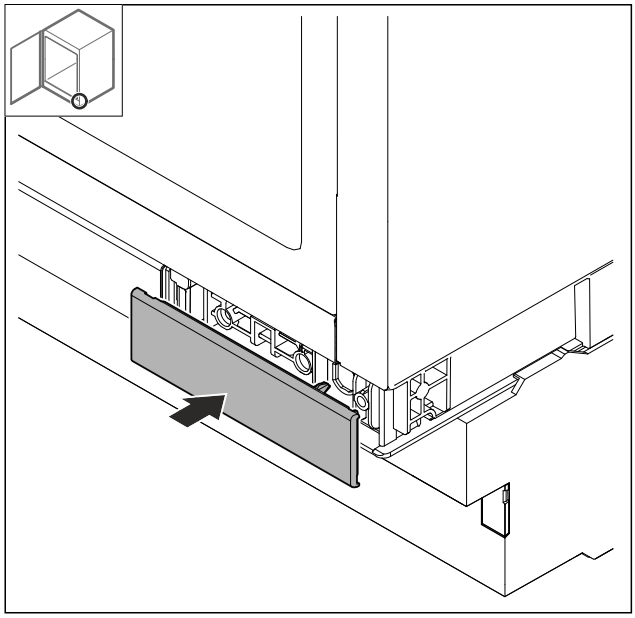

Fig. 38

▶ Put on the cover.

9 Replacing the door hinge with multi-joint hinge (not decor-compatible)

9.1 Safety instructions

WARNING

Risk of injury if the door is not reversed correctly!

▶ Replace the door hinge with specialist personnel.

WARNING

Risk of injury and material damage due to door weight!

▶ Only change the door hinge if you can carry a weight of 15 kg.

▶ Change the door hinge with two people.

NOTICE

Live parts!

Damage to electrical components.

▶ Remove the mains plug before you reverse the door.

9.2 Tool

9.3 Removing covers

▶ Open the door.

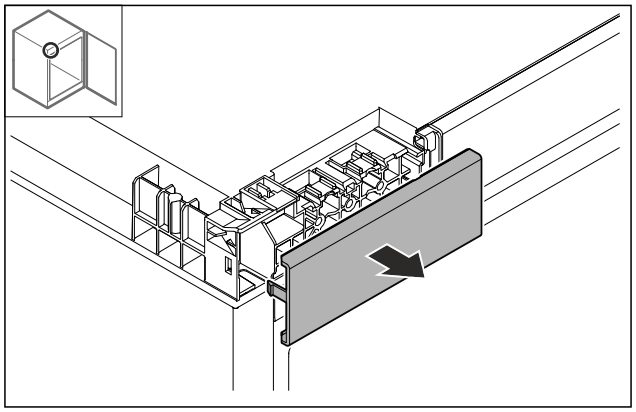

Fig. 39

▶ Remove cover.

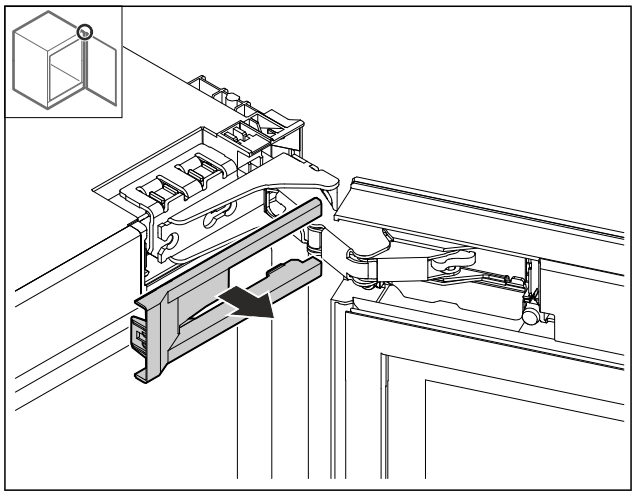

Fig. 40

▶ Remove cover.

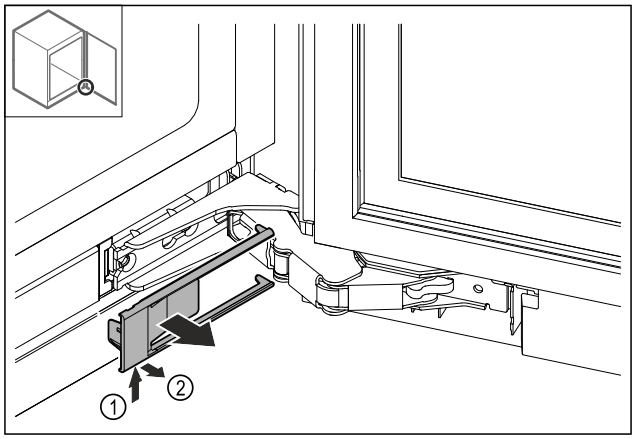

Fig. 41

▶ Remove cover.

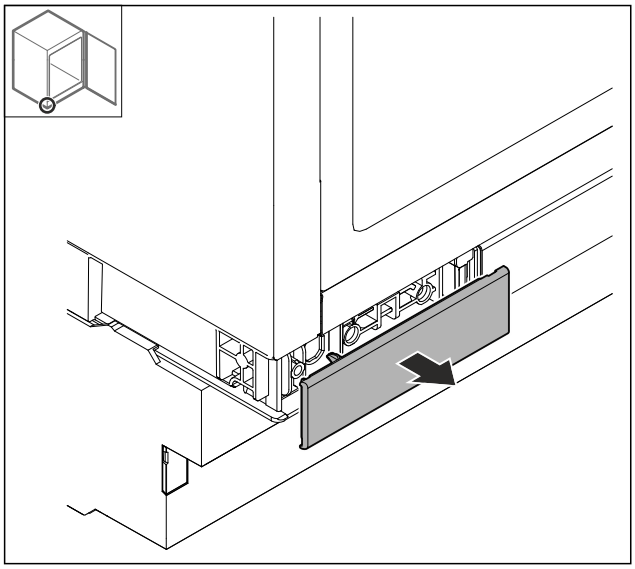

Fig. 42

▶ Remove cover.

9.4 Removing the door

NOTICE

Risk of injury if the door tips out!

▶ Hold the door.

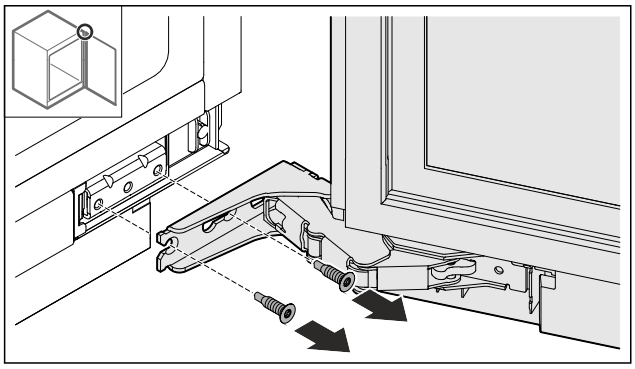

Fig. 43

▶ Loosen screws at bottom.

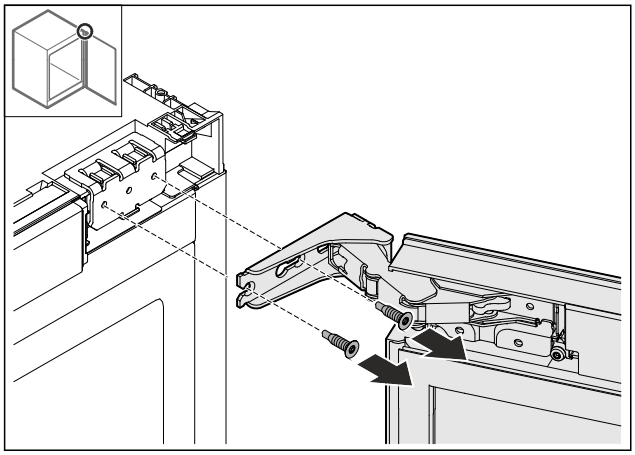

Fig. 44

▶ Loosen screws at top.

▶ Remove the door.

▶ Place the door on a soft surface.

9.5 Removing the hinge

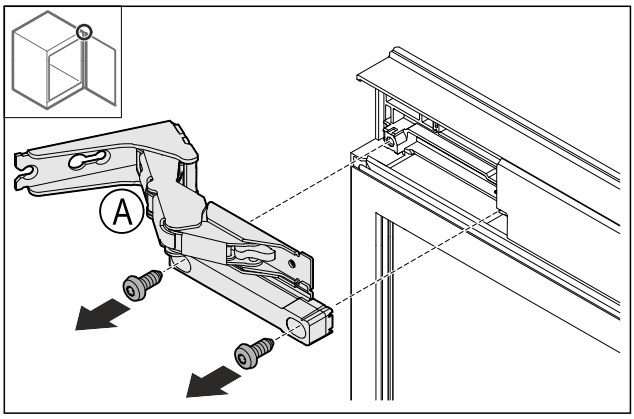

Fig. 45

▶ Unscrew the screws.

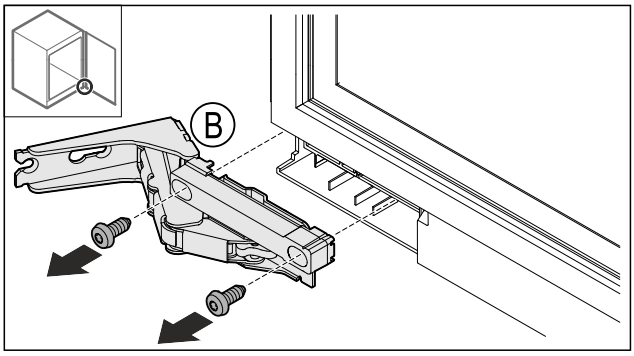

Fig. 46

▶ Unscrew the screws.

9.6 Converting the hinge

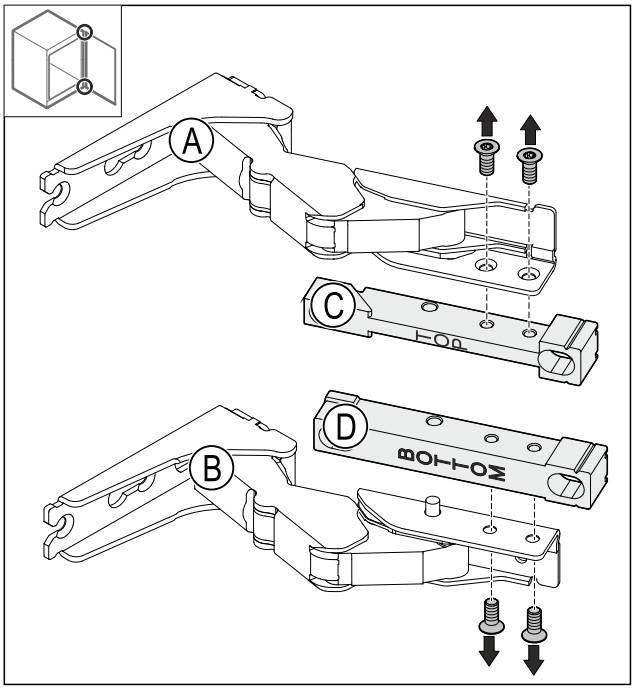

Fig. 47

▶ Removing the brackets.

Replacing the door hinge with multi-joint hinge (not decor-compatible)

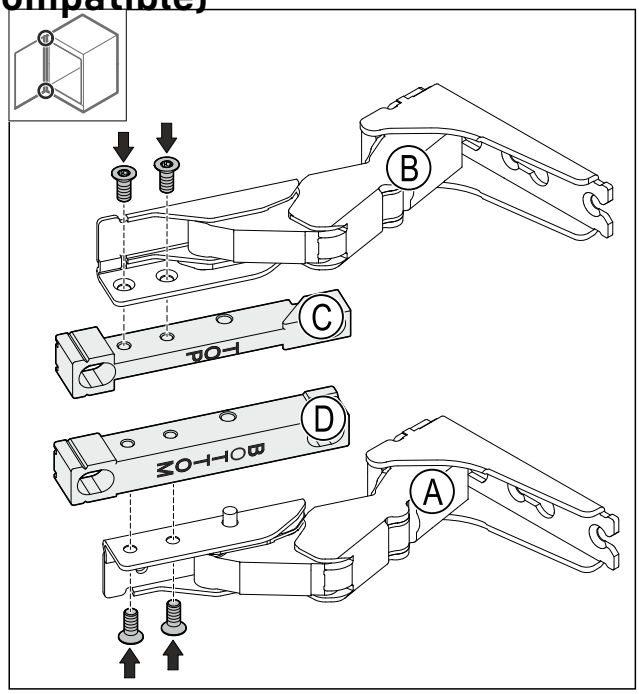

Fig. 48

▶ Fitting the brackets.

▷ Upper bracket (TOP) remains in the upper installation position.

▷ Lower bracket (BOTTOM) remains in the lower installation position.

9.7 Swapping covers

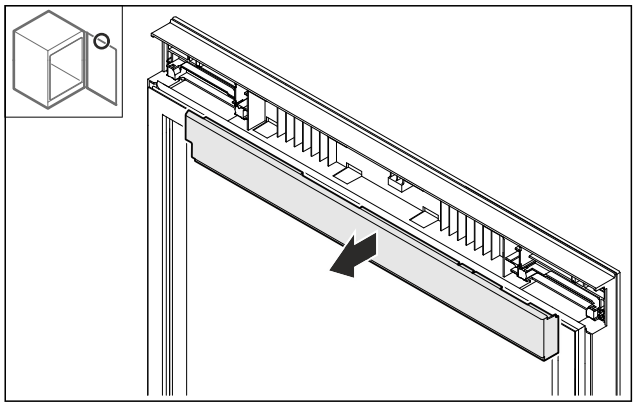

Fig. 49

▶ Loosen the top cover.

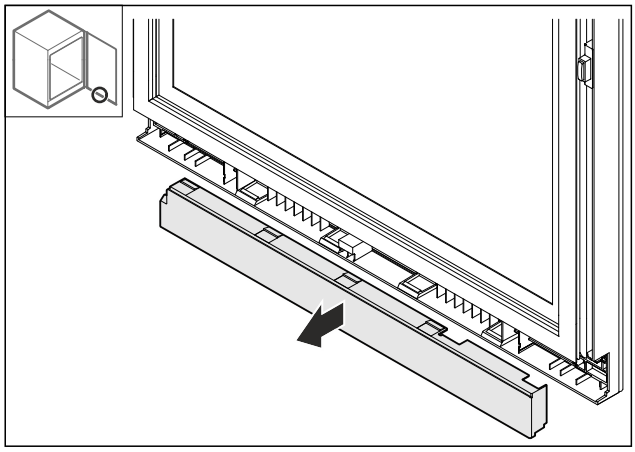

Fig. 50

▶ Loosen the bottom cover

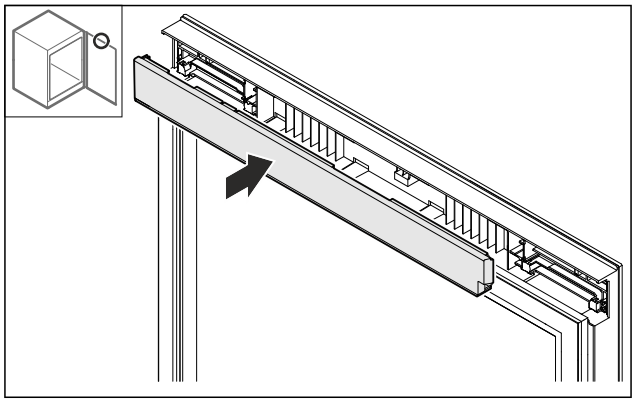

Fig. 51

▶ Insert the cover at the top, rotated 180° from below.

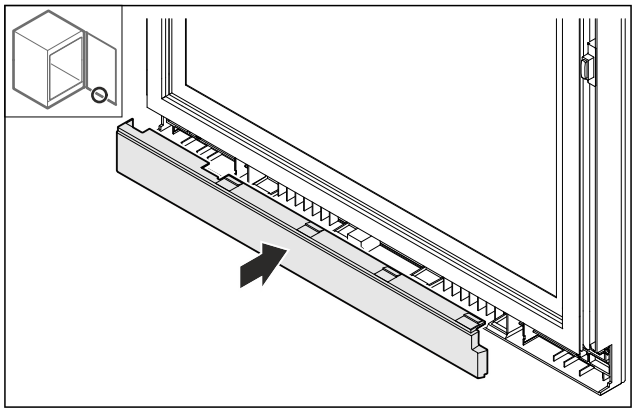

Fig. 52

▶ Insert the cover at the bottom, rotated 180° from above.

9.8 Relocating the door stopper

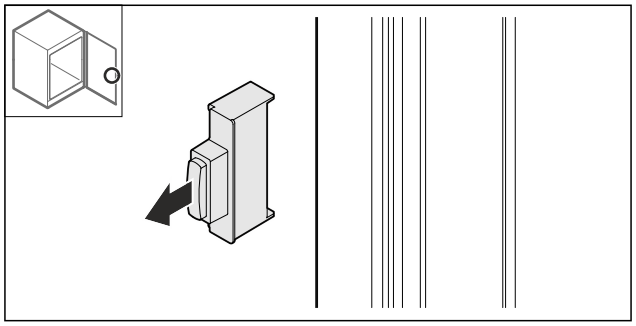

Fig. 53

▶ Pull out the door stopper.

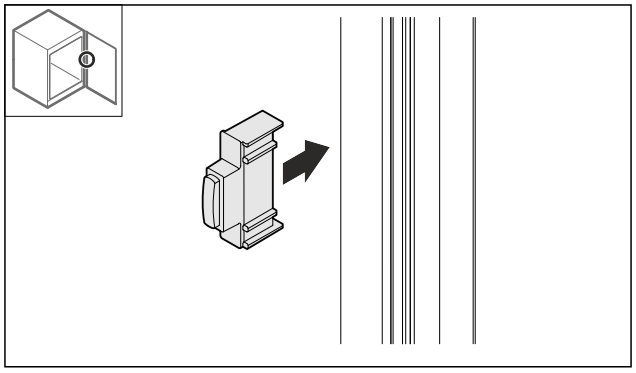

Fig. 54

▶ Insert the door stopper rotated by 180° on the opposite side.

*** Depending on model and options**

9.9 Fitting the hinges

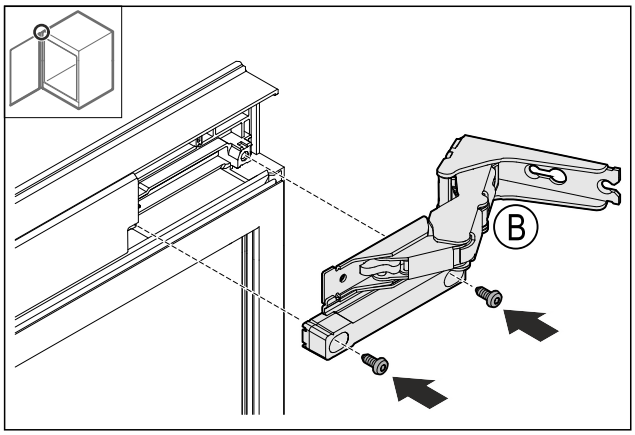

Fig. 55

▶ Fit the upper hinge.

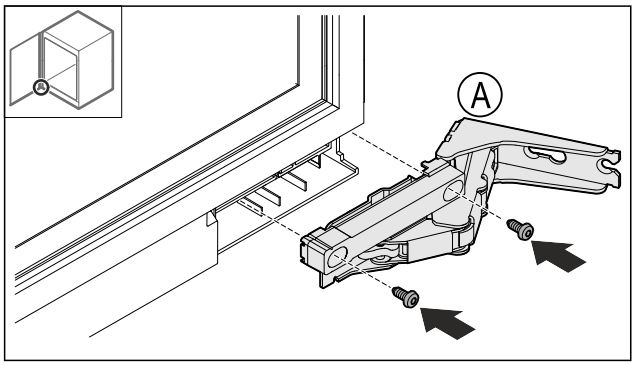

Fig. 56

▶ Fit the lower hinge.

9.10 Relocating the upper bracket

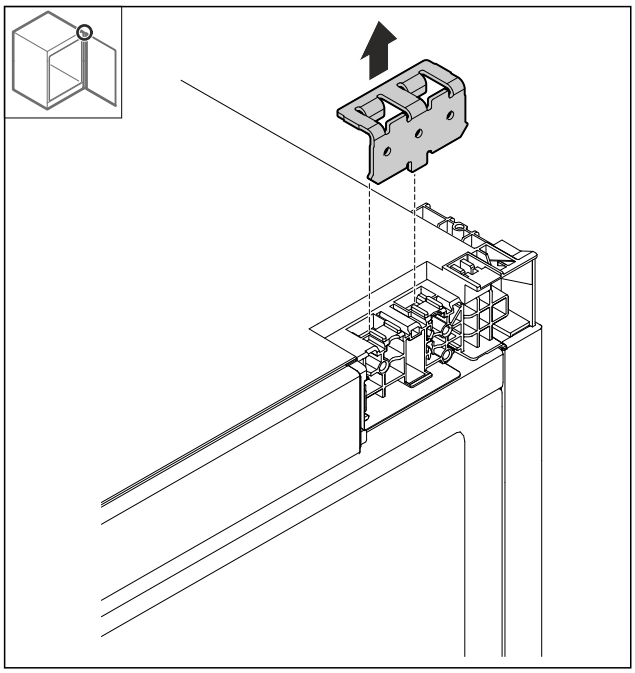

Fig. 57

▶ Remove the bracket.

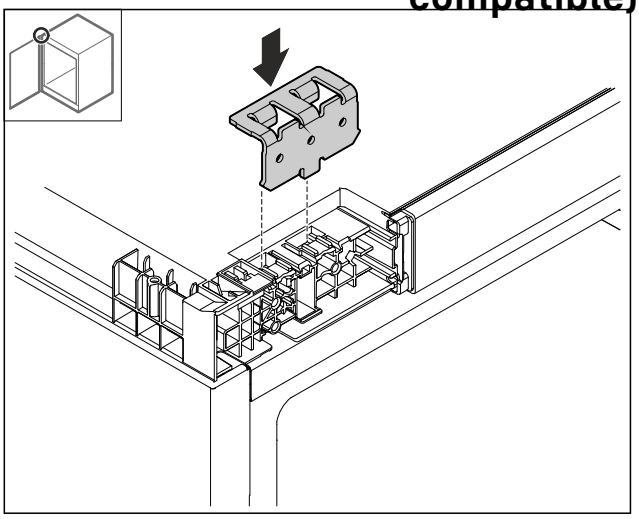

Fig. 58

▶ Insert the bracket.

9.11 Relocating the bottom bracket

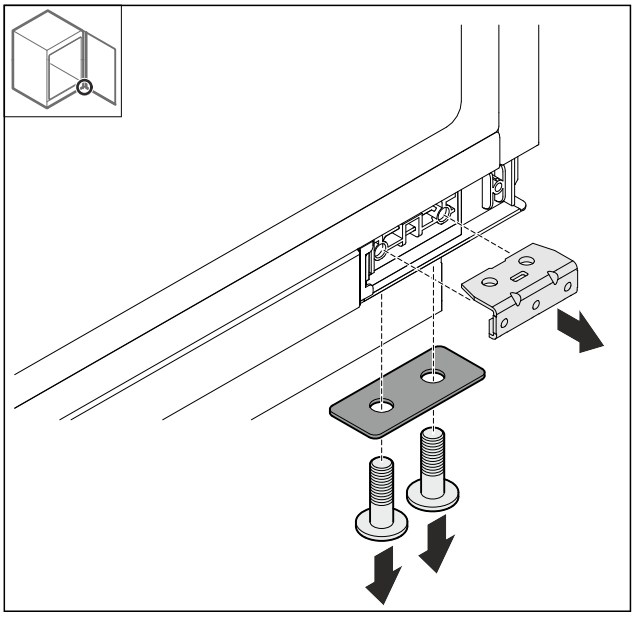

Fig. 59

▶ Detach the bracket.

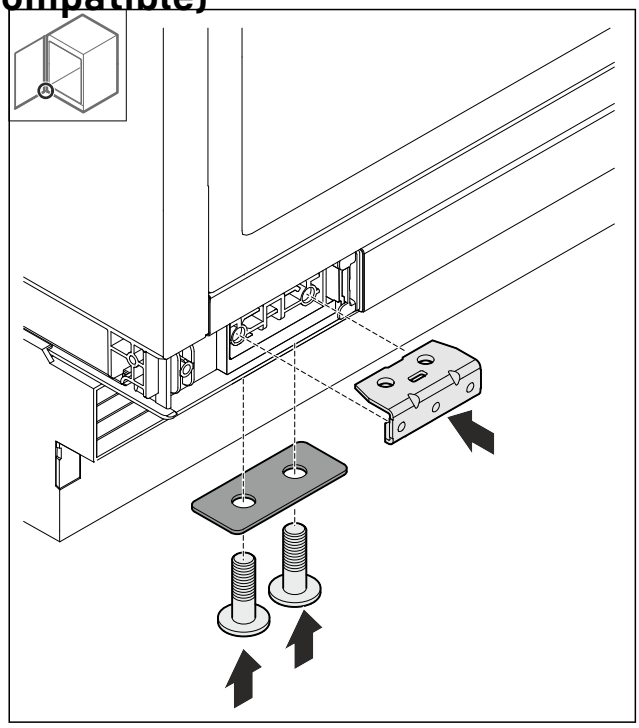

Fig. 60

▶ Fit the bracket.

9.12 Fitting the door

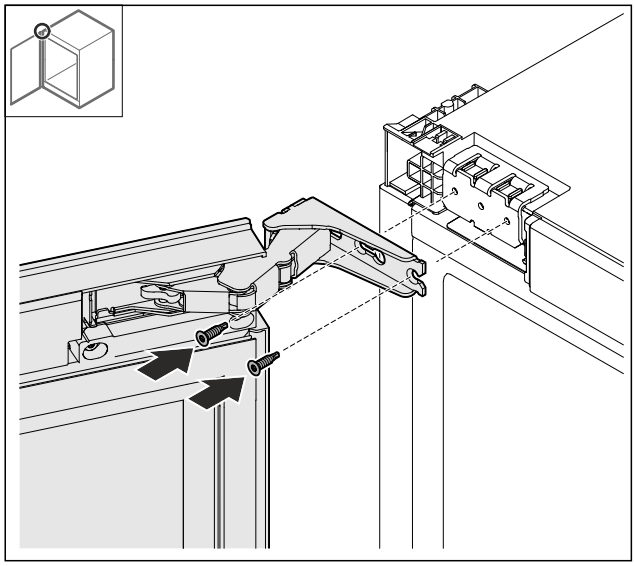

Fig. 61

▶ Screw on door at the top.

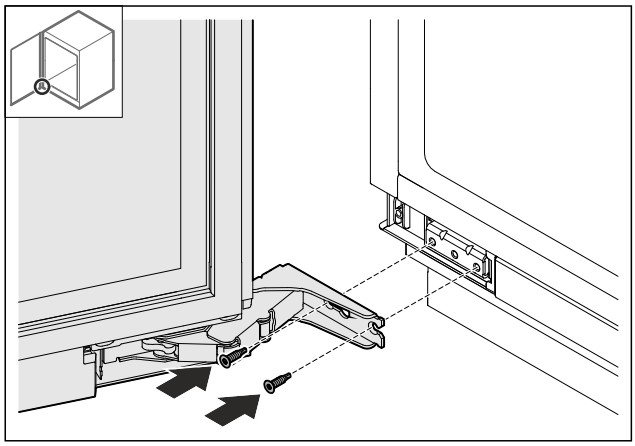

Fig. 62

▶ Screw on door at the bottom.

9.13 Putting on the covers

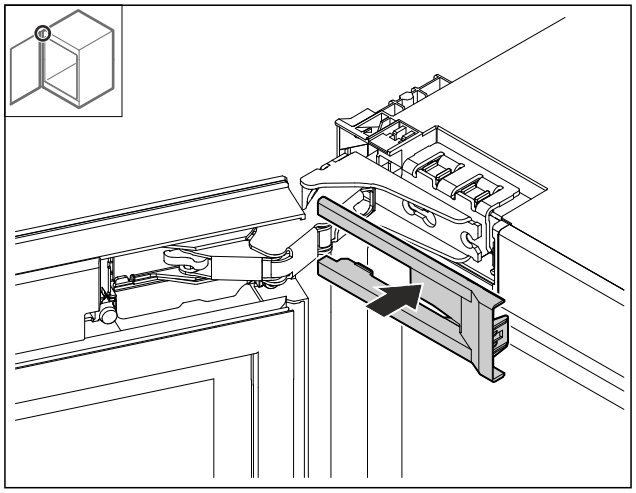

Fig. 63

▶ Put on the cover.

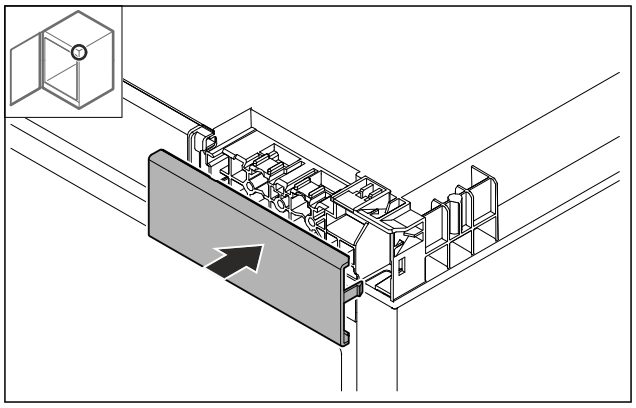

Fig. 64

▶ Put on the cover.

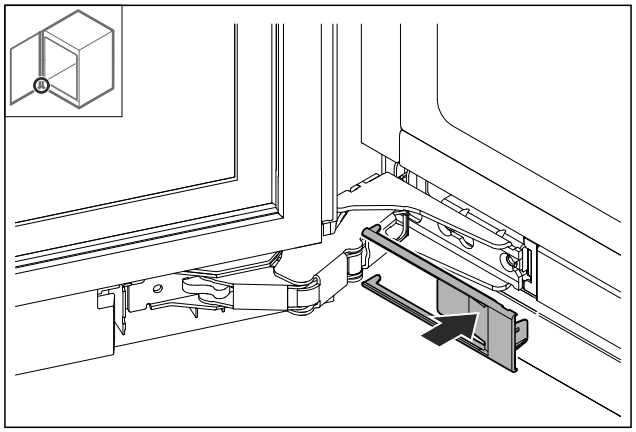

Fig. 65

▶ Put on the cover.

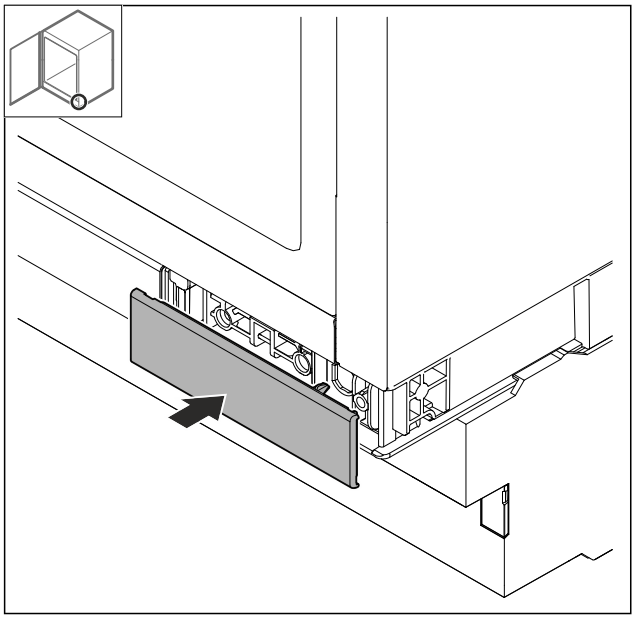

Fig. 66

▶ Put on the cover.

10 Replacing door hinge with multi-joint hinge (decor-compatible)

10.1 Safety instructions

WARNING

Risk of injury if the door is not reversed correctly!

▶ Replace the door hinge with specialist personnel.

WARNING

Risk of injury and material damage due to door weight!

▶ Only change the door hinge if you can carry a weight of 15 kg.

▶ Change the door hinge with two people.

NOTICE

Live parts!

Damage to electrical components.

▶ Remove the mains plug before you reverse the door.

10.2 Tool

10.3 Removing covers

▶ Open the door.

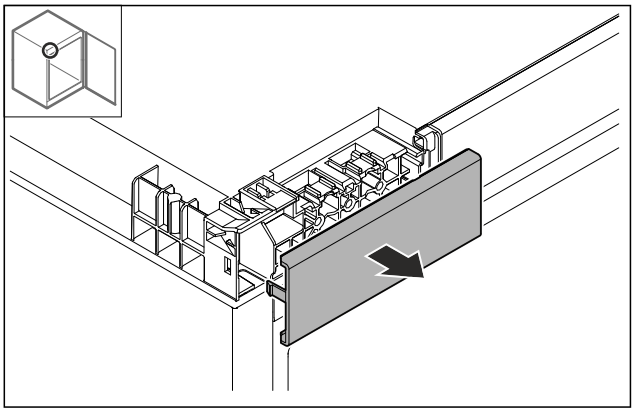

Fig. 67

▶ Remove cover.

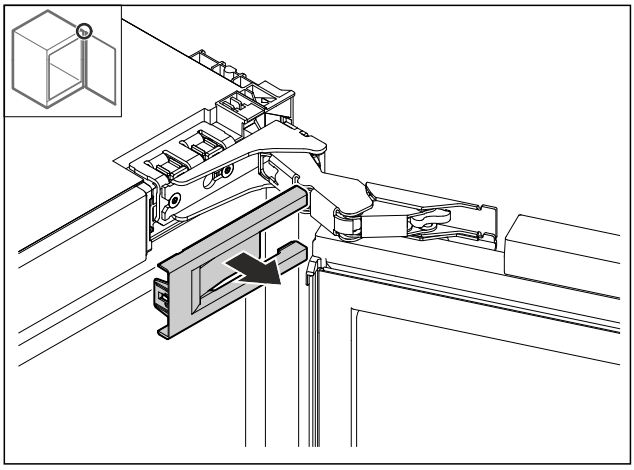

Fig. 68

▶ Remove cover.

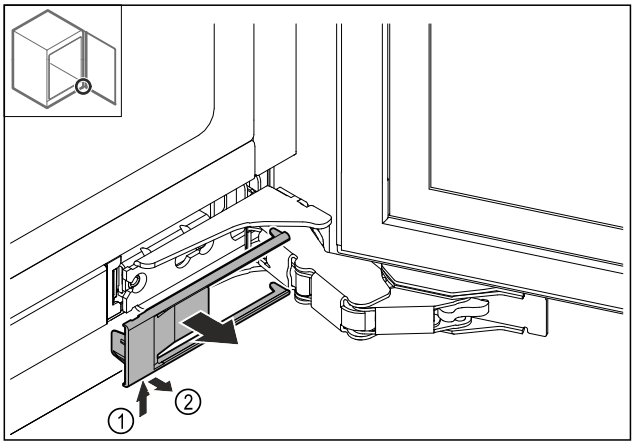

Fig. 69

▶ Remove cover.

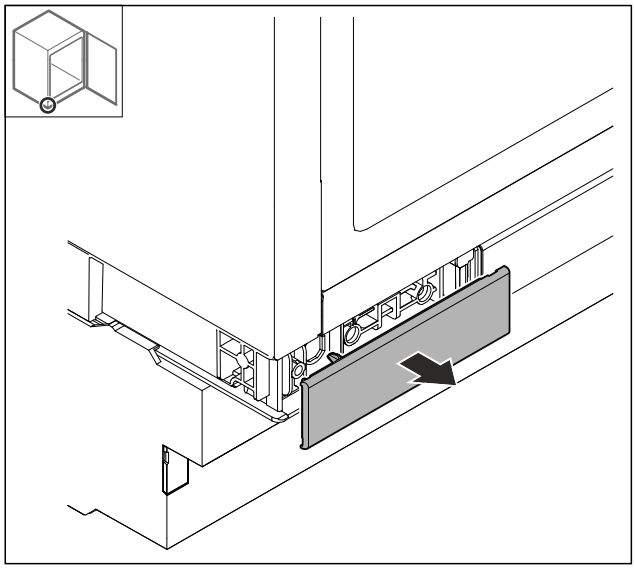

Fig. 70

▶ Remove cover.

10.4 Removing the door

NOTICE

Risk of injury if the door tips out!

▶ Hold the door.

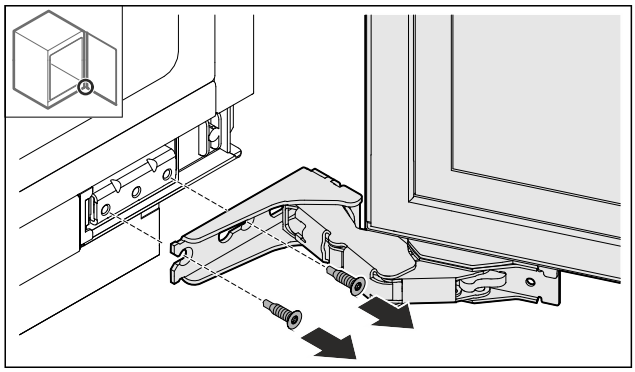

Fig. 71

▶ Loosen screws at bottom.

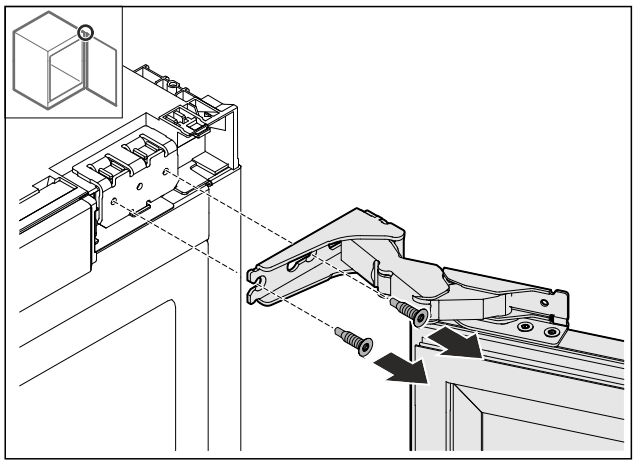

Fig. 72

▶ Loosen screws at top.

▶ Remove the door.

▶ Place the door on a soft surface.

10.5 Removing the hinge

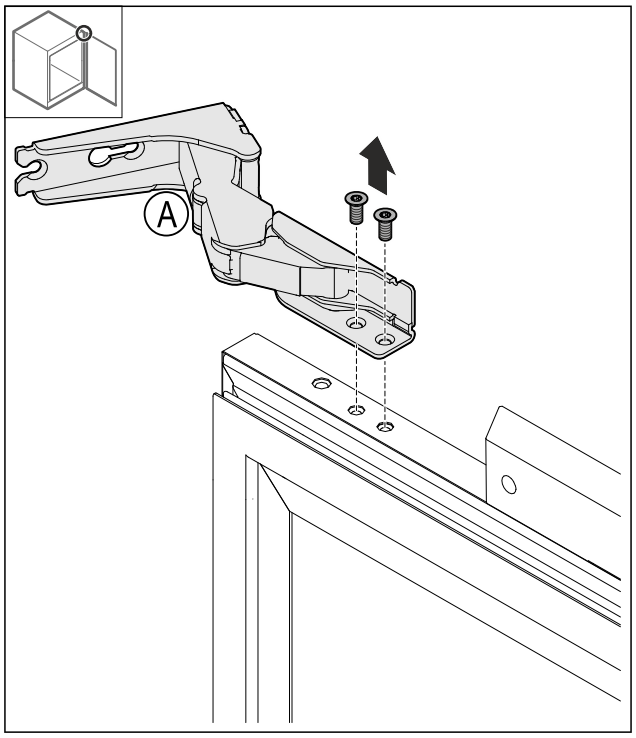

Fig. 73

▶ Unscrew the screws.

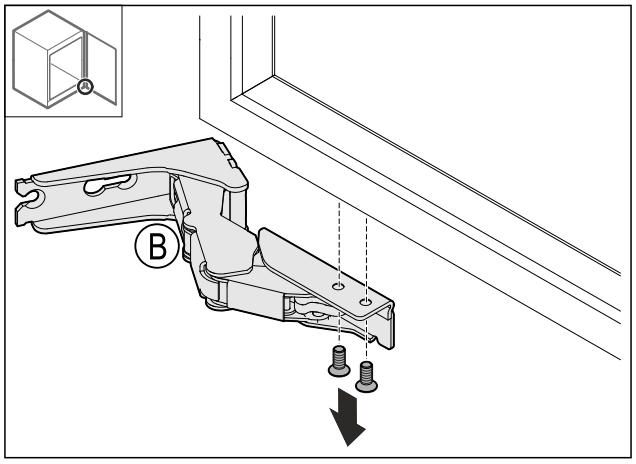

Fig. 74

▶ Unscrew the screws.

10.6 Relocating the door stopper

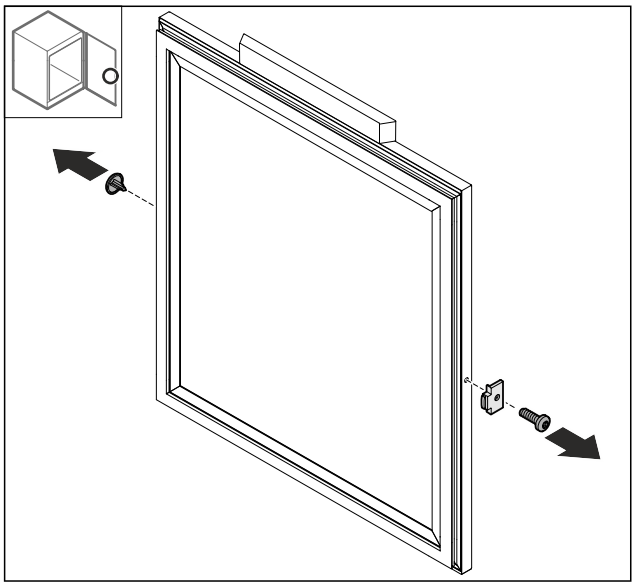

Fig. 75

▶ Remove cover *Fig. 75 (1)*.
▶ Detach the *Fig. 75 (2)* door stopper.

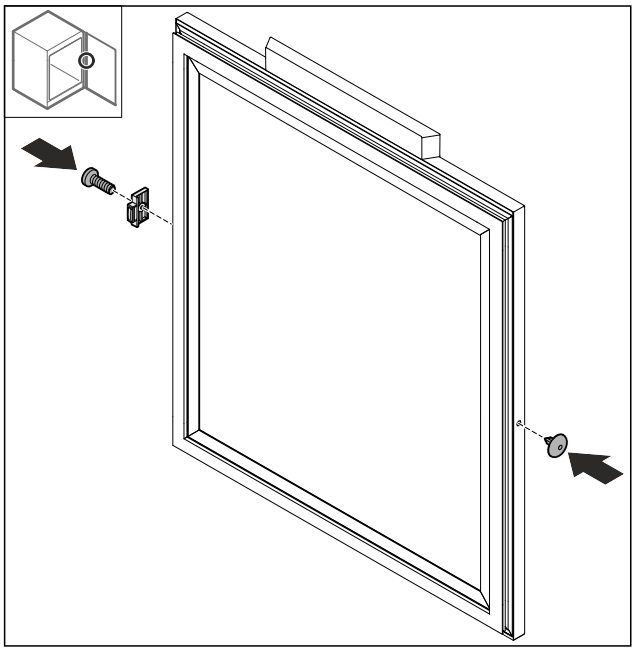

Fig. 76

▶ Turn the door stopper *Fig. 76 (1)* 180° and fit it on the opposite side.
▶ Insert the cover *Fig. 76 (2)* on the opposite side.

10.7 Fitting the hinges

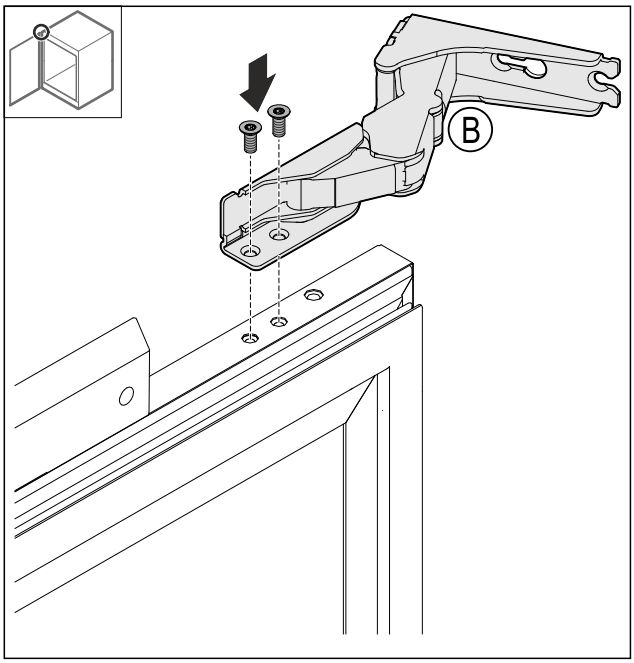

Fig. 77

▶ Fit the upper hinge.

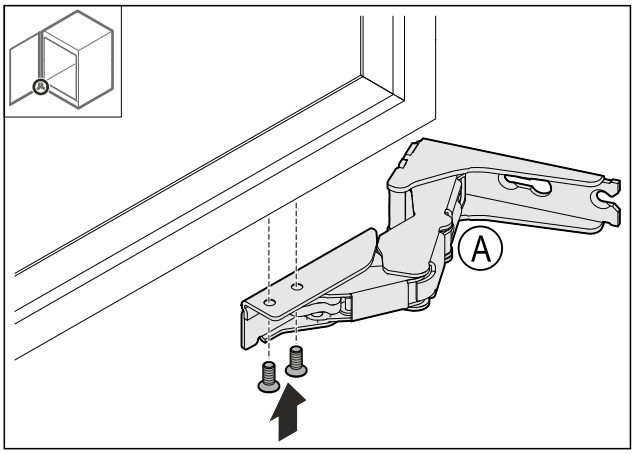

Fig. 78

▶ Fit the lower hinge.

10.8 Relocating the upper bracket

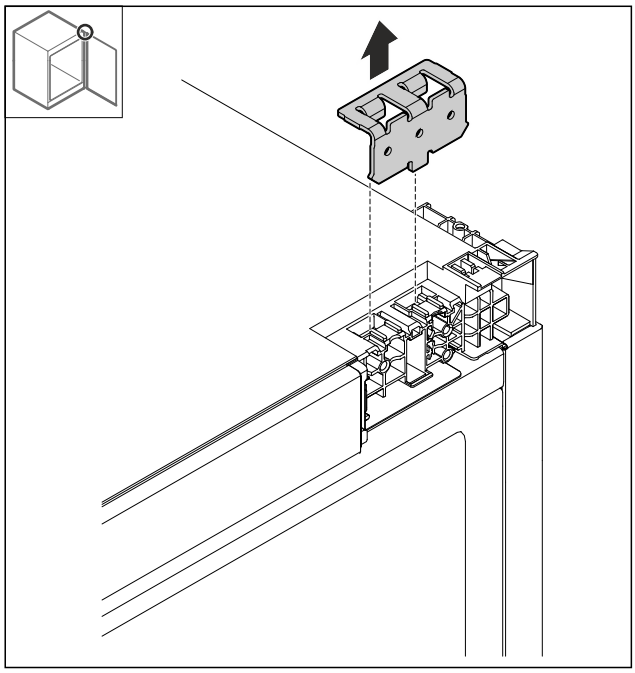

Fig. 79

▶ Remove the bracket.

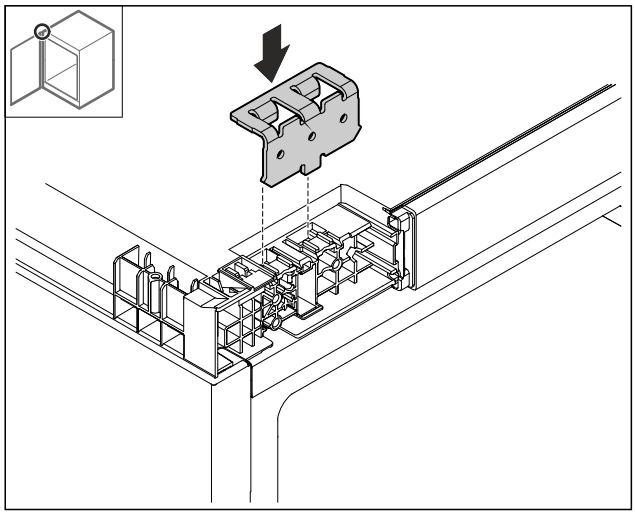

Fig. 80

▶ Insert the bracket.

10.9 Relocating the bottom bracket

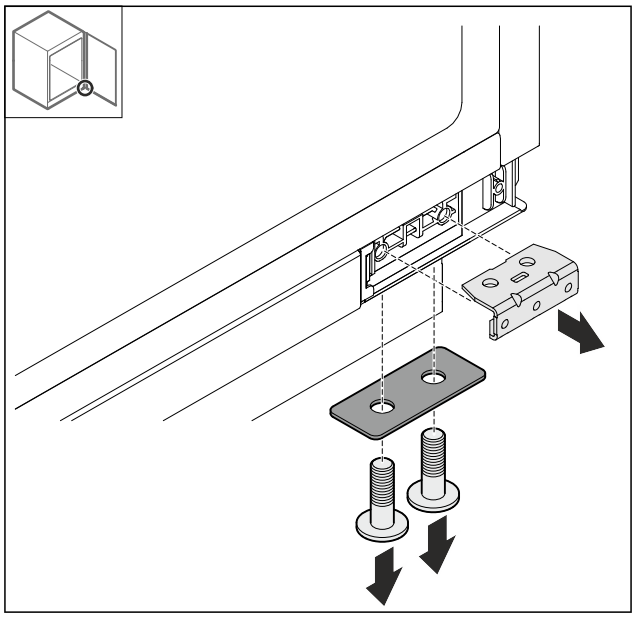

Fig. 81

▶ Detach the bracket.

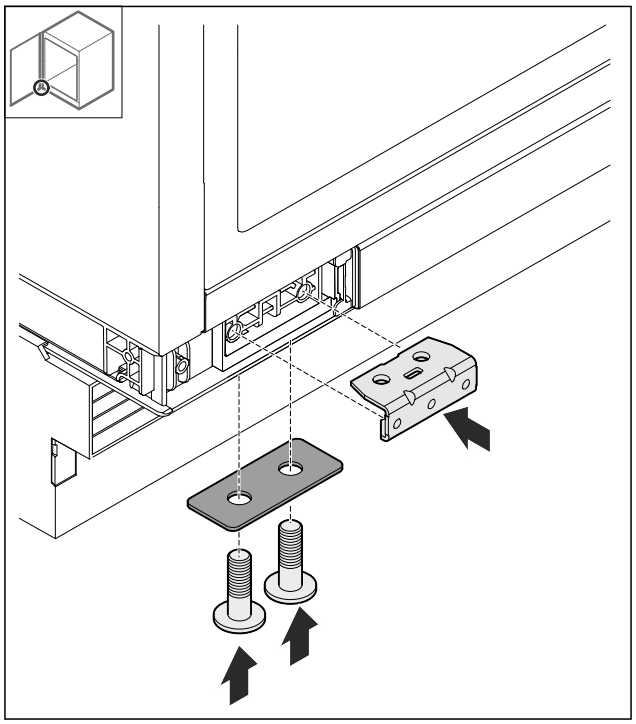

Fig. 82

▶ Fit the bracket.

10.10 Fitting the door

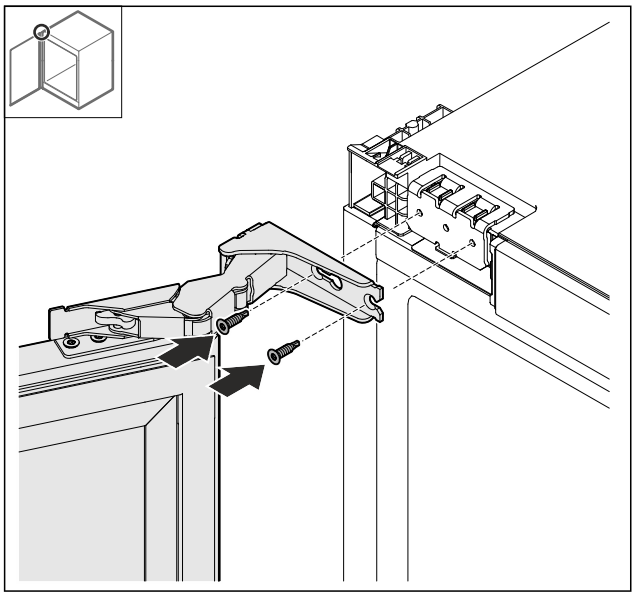

Fig. 83

▶ Screw on door at the top.

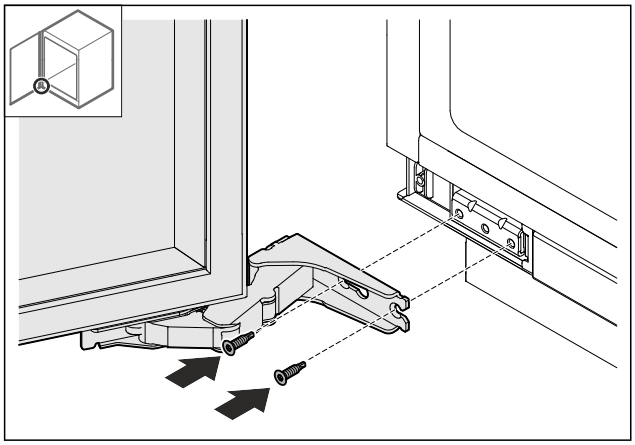

Fig. 84

▶ Screw on door at the bottom.

10.11 Putting on the covers

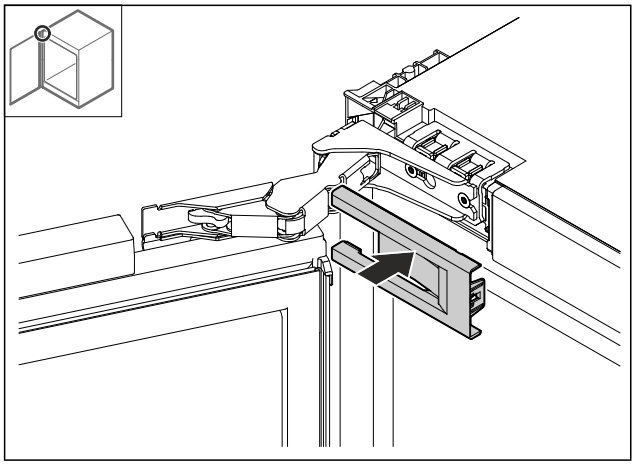

Fig. 85

▶ Put on the cover.

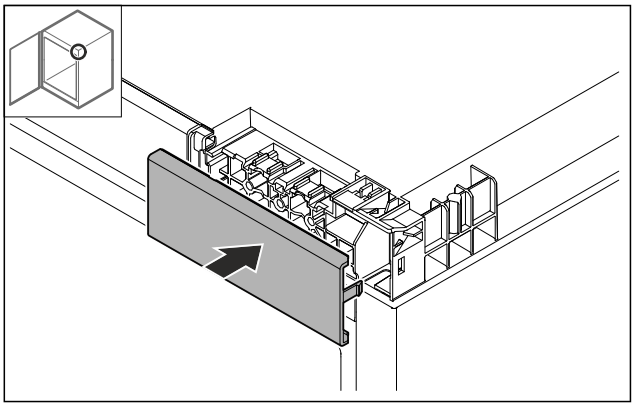

Fig. 86

▶ Put on the cover.

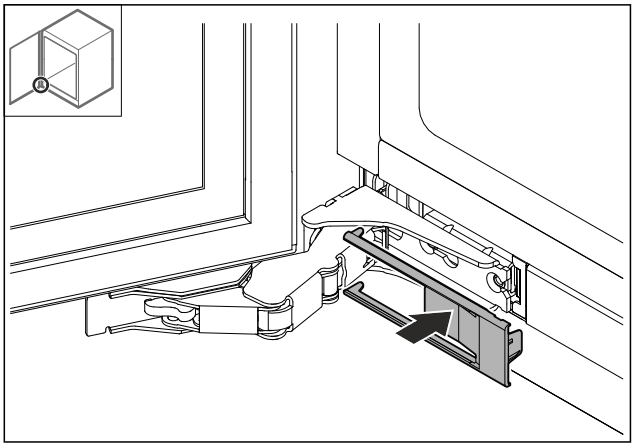

Fig. 87

▶ Put on the cover.

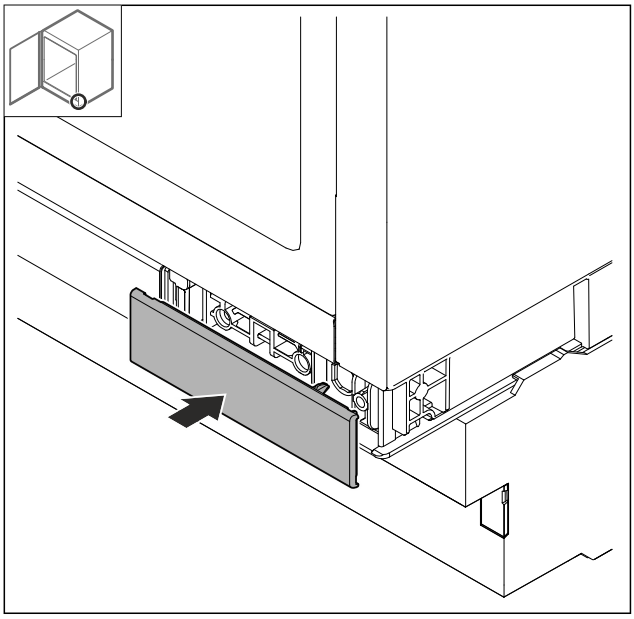

Fig. 88

▶ Put on the cover.

11 Aligning the door hinge with bearing bracket hinge

If the door is not straight, it can be aligned at the hinge angle.

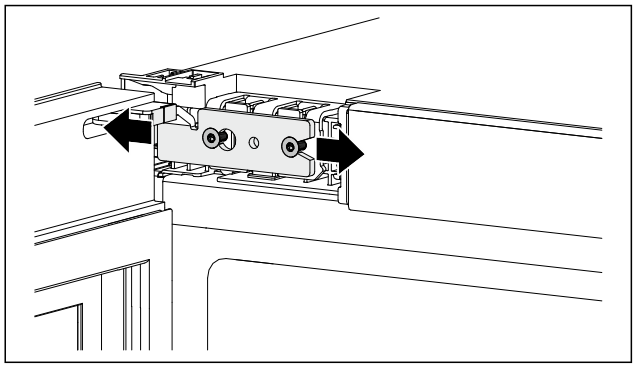

Fig. 89 Example illustration

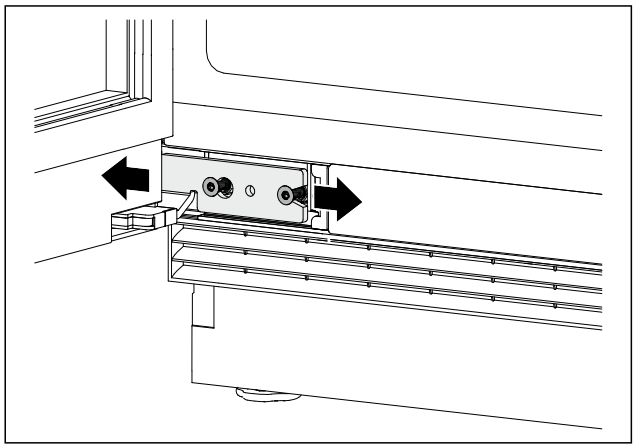

Fig. 90 Example illustration

▶ Loosen screws slightly.
▶ Move the door to the right or left with the hinge bracket.
▶ Tighten the screws as far as they will go.
▷ The door is aligned.

12 Aligning the door hinge with multi-joint hinge (not decor-compatible)

If the door is not straight, it can be aligned at the hinge angle.

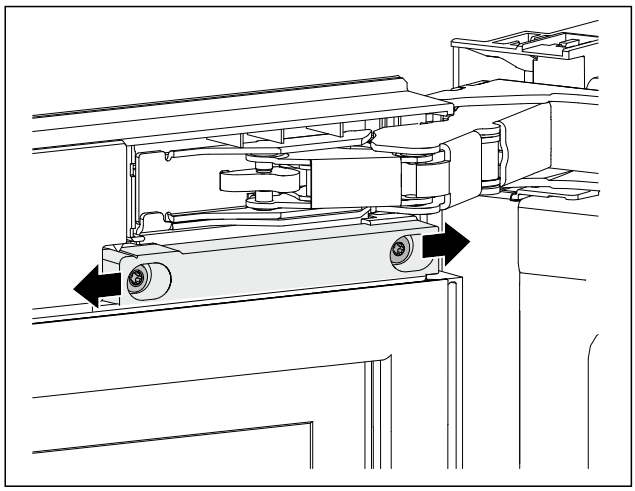

Fig. 91 Example illustration

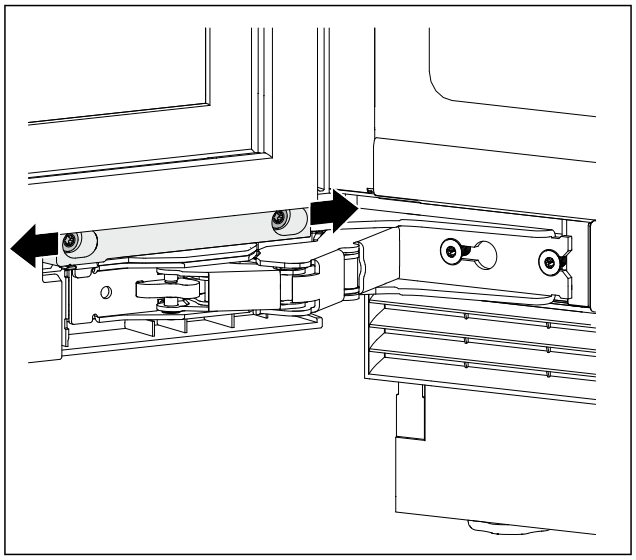

Fig. 92 Example illustration

▶ Loosen screws slightly.
▶ Move the door to the right or left with the hinge bracket.
▶ Tighten the screws as far as they will go.
▷ The door is aligned.

13 Recessed installation

13.1 Tool

Before installing the appliance in the niche, note the fixing method:	
Lateral fixing	**Ceiling mounting**
Substructure under a hard worktop such as granite	No granite slab
The appliance is lower than the worktop when the adjustable feet are fully extended.	Appliance sits slightly braced under worktop when adjustable feet are fully extended.
Appliance side panel available for screwing.	

13.2 Scope of supply

1x	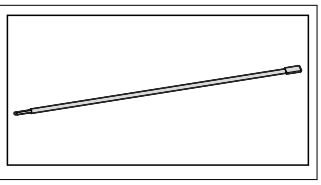

*** Depending on model and options**

1x	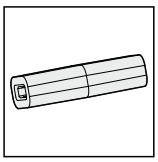
2x	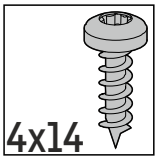
2x	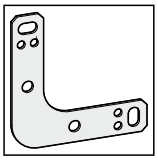
2x	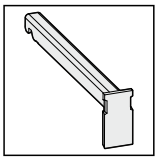

13.3 Preparing the appliance

Before installing the appliance in a niche, make sure that the following requirements are met:

- ❑ The door hinge has been hung. You can only change the door hinge from the outside of the niche because you need enough space to do so.

▶ Plug the mains cable's IEC socket completely into the appliance plug on the back of the appliance.
▶ Ensure that the IEC socket is tight.
▶ Use a cord to lay the mains plug to a freely accessible socket.

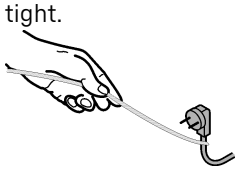

Fig. 93

NOTICE
Risk of damage if the appliance is moved!
If you move the appliance, you may damage the floor or the appliance's adjustable feet may break off.
Before moving:
▶ Screw in the levelling feet completely.
▶ Place a cardboard strip (e.g. packaging) with approx. 100 mm x 600 mm under each of the adjustable feet.
When moving:
▶ Move the appliance carefully.
▶ For uneven floors: Carefully lift the appliance.
After moving:
▶ Remove the cardboard strips.

13.4 Screwing the appliance to the ceiling

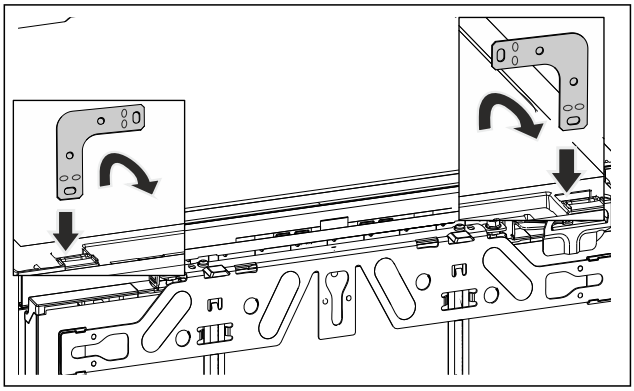

Fig. 94 Example illustration

▶ Insert the bracket into the opening in the unit ceiling and bend it forwards.

WARNING
Risk of fire due to short circuit!
▶ When you push the appliance into the niche: do not kink, jam or damage the mains cable.
▶ The appliance must not be operated with a defective mains cable.

▶ Slide the appliance into the recess and align, see point (see 13.6 Aligning the appliance) .

13.5 Fixing the appliance on the side

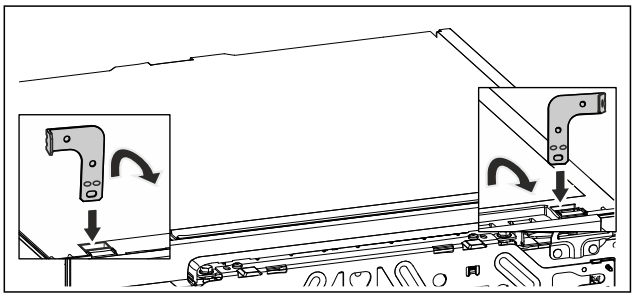

Fig. 95 Example illustration

▶ Bend one end of each bracket before installation. Insert the straight side into the opening in the appliance cover and bend it forwards.

WARNING
Risk of fire due to short circuit!
▶ When you push the appliance into the niche: do not kink, jam or damage the mains cable.
▶ The appliance must not be operated with a defective mains cable.

▶ Slide the appliance into the recess and align, see point (see 13.6 Aligning the appliance) .

13.6 Aligning the appliance

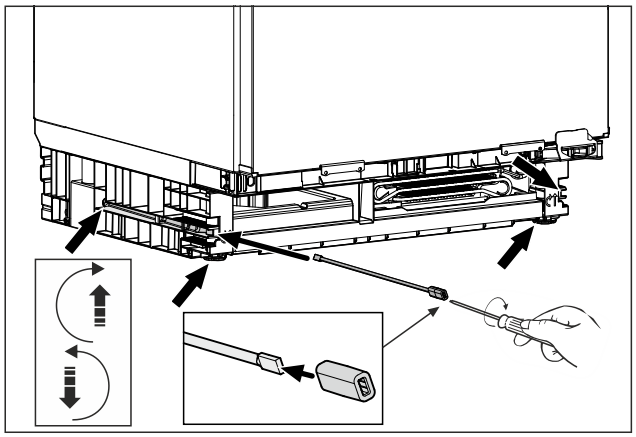

Fig. 96 Example illustration

▶ Unscrew the levelling feet to below the worktop.
▶ Align the appliance in an upright position using a spirit level.
▶ Keep the rod with adapter piece to remove the appliance.

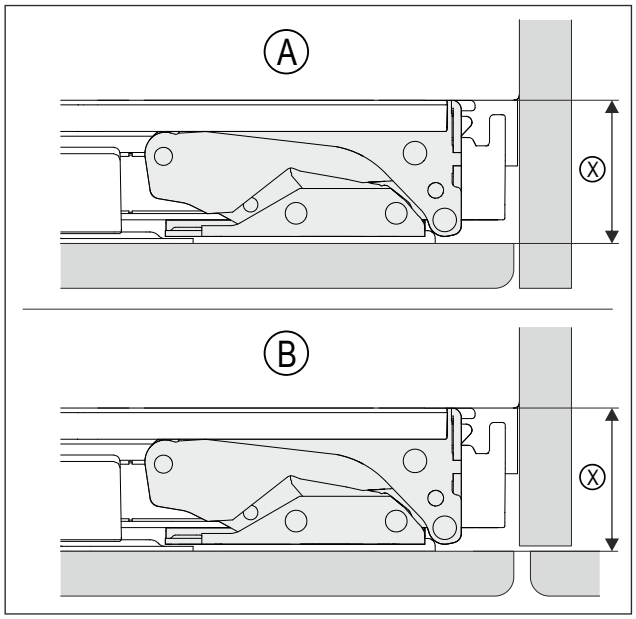

Fig. 97 Example illustration

(A) Niche with wall

(B) Niche with neighbouring furniture

(X) is the distance between the body of the appliance and the rear of the mounted furniture front

▶ Check that the distance (X) corresponds to installation situation (A) or (B).

(X)	42 mm
If there is no unit side panel, orientate on the worktop.	

▶ Unscrew the levelling feet alternately to the maximum. The maximum adjustment travel is 60 mm.
▷ Appliance is aligned upright.
▷ The appliance is slightly braced in the recess between the floor and worktop.

13.7 Fitting the base

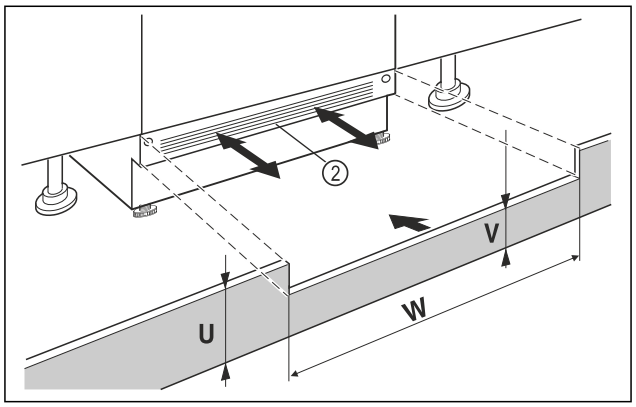

Fig. 98 Example illustration

▶ Put on the appliance base cover *Fig. 98 (2)* but do not fix it in place yet.
▶ Position the unit door and unit base panel for testing
▶ If the base panel is visible *Fig. 98 (2)*, pull it forwards so that the front edge of the ventilation grille and the unit base panel are level.

-or-

▶ If the base panel is concealed *Fig. 98 (2)*, push it all the way back.

▶ Ensure that the ventilation slots are completely free: If necessary, cut the height of the unit base panel *Fig. 98 (U)* to size!
▷ Adjust the web height *Fig. 98 (V)*under the appliance base panel *Fig. 98 (2)*along the niche width *Fig. 98 (W)*.

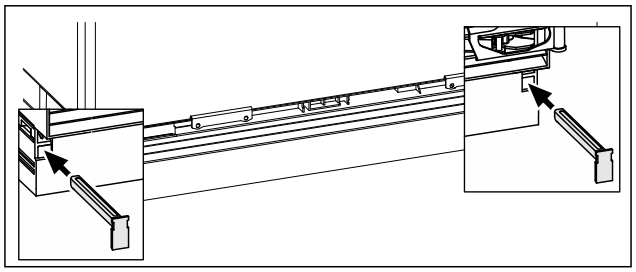

Fig. 99 Example illustration

▶ Fix the appliance base panel: Insert the latch while holding the appliance base panel.
▶ Fasten the unit base panel.

13.8 Screwing the appliance into the niche

Ceiling mounting:

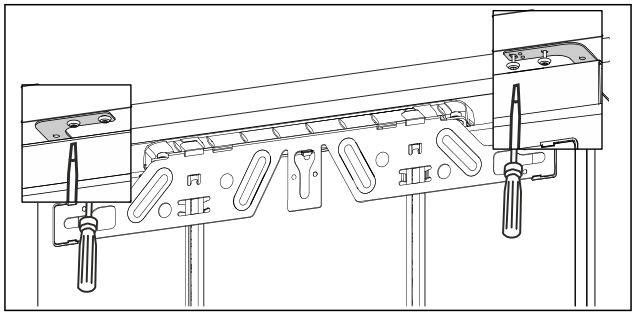

Fig. 100 Example illustration

▶ For mounting under the worktop, screw on the mounting brackets with two screws each underneath the worktop.

Lateral fixing:

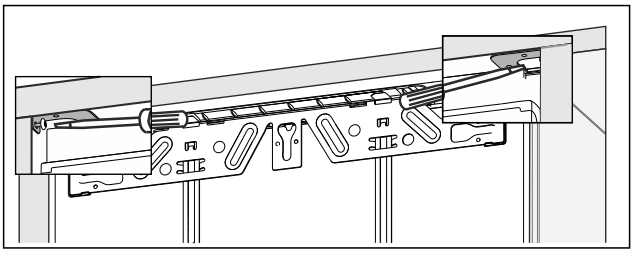

Fig. 101 Example illustration

▶ For side mounting, screw the mounting bracket into the niche with one screw on the right and one on the left.
▶ For appliances with a swap bearing block hinge, start on the opposite side of the hinge.*

14 Fitting the unit door

Tool

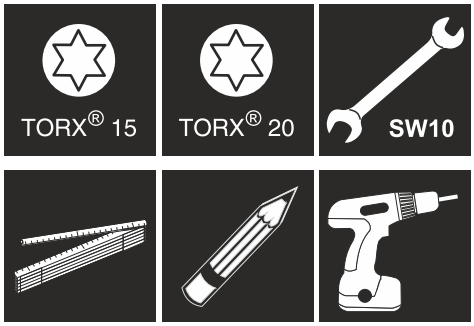

Scope of supply

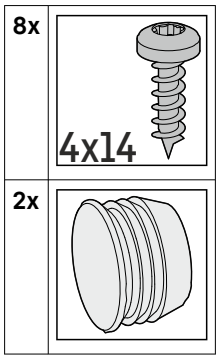

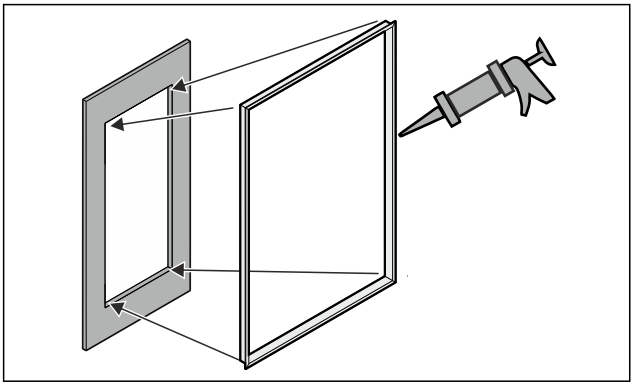

Fig. 102

▶ Glue the optional profile frame into the cut-out. *
▶ Fit the handle on the unit door; it is not possible to fit it later.

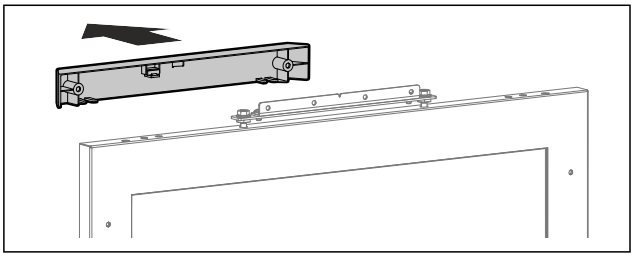

▶ Remove cover.

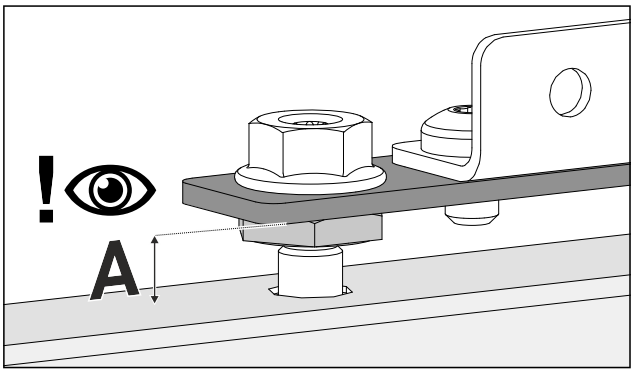

▶ Check the pre-setting (A) 8 mm (distance between appliance door and lower edge of mounting plate).
▶ Adjust the distance if necessary.

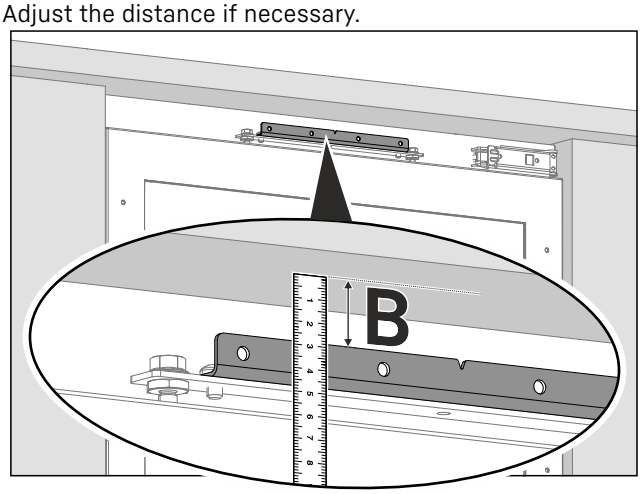

▶ Measure the distance (B) between the lower edge of the worktop and the upper edge of the mounting bracket.

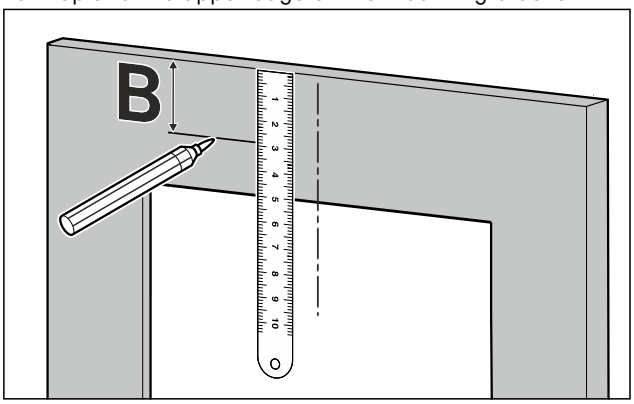

▶ Transfer the distance (B) to the back of the unit door and mark it.

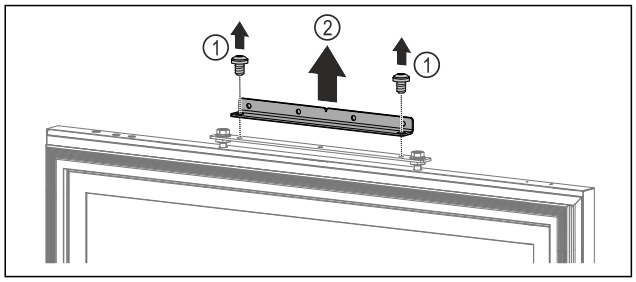

Fig. 103

▶ Remove the screws. *Fig. 103 (1)*
▶ Remove the mounting bracket. *Fig. 103 (2)*

Note
Pay attention to the length of the screws!

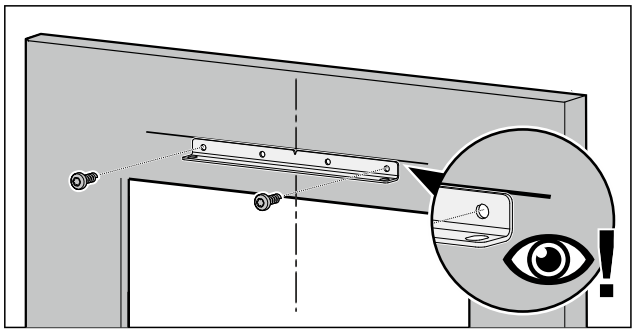

▶ Align the mounting bracket with the marked distance and screw it to the centre of the unit door.

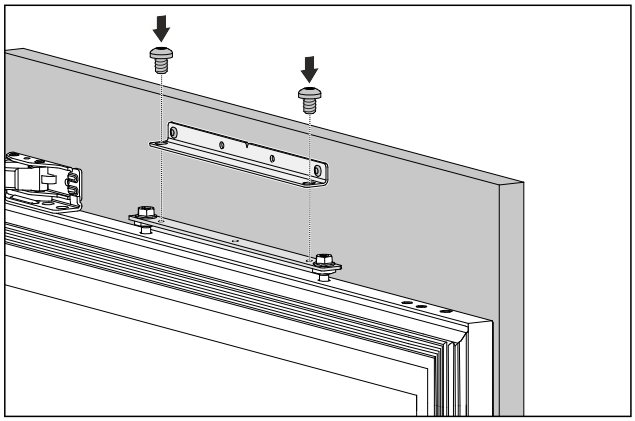

▶ Attach the unit door to the appliance.
▶ Close the door.

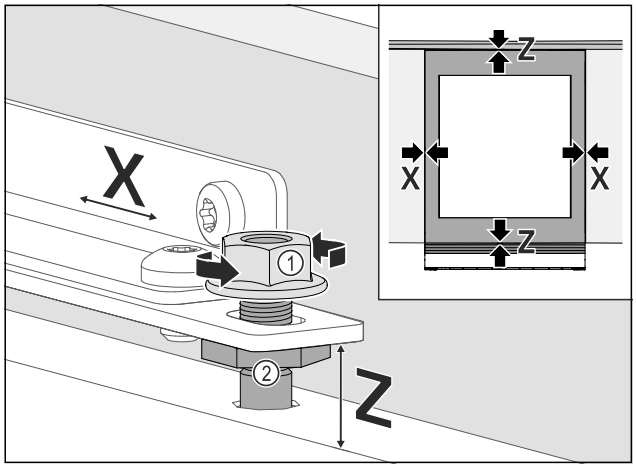

Fig. 104

▶ Check the distance of the door against the surrounding unit doors.
▶ Align the unit door sideways: Loosen lock nut *Fig. 104 (1)*, move unit door in **X** direction.
▶ Tighten the lock nuts *Fig. 104 (1)*.
▶ Align the unit door in height **Z** and in the lateral inclination: Adjust the adjustment bolt *Fig. 104 (2)*.
▷ The unit door is aligned flush with the surrounding unit doors.

Note
Pay attention to the length of the screws!

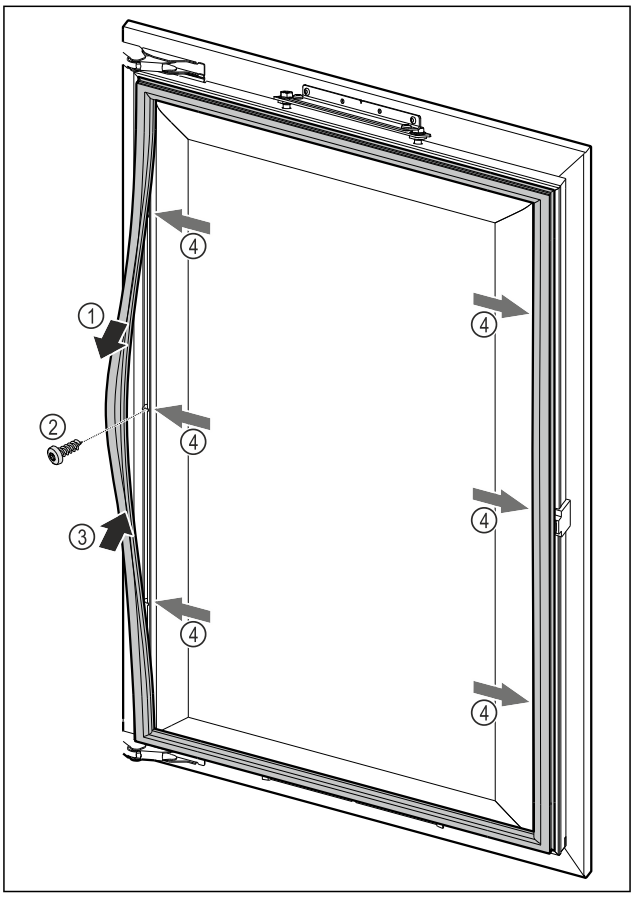

Fig. 105

▶ Loosen the magnetic door seal at certain points *Fig. 105 (1)*, screw on the unit door through the drill hole underneath *Fig. 105 (2)* and snap the magnetic door seal back into place *Fig. 105 (3)*.
▶ Repeat this step at all fastening points *Fig. 105 (4)*.

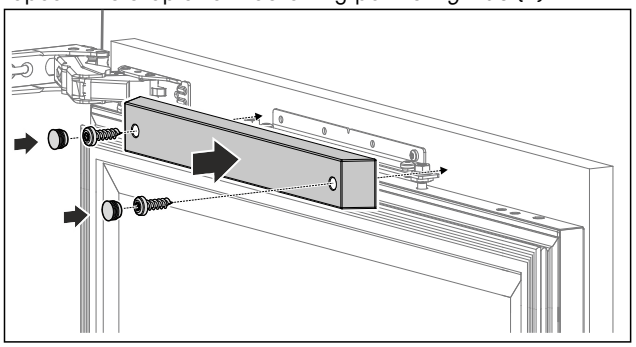

▶ Fit and screw on the top cover to ensure proper closing function.

15 After installation

▶ Remove all transport safety fittings from the interior.

NOTICE
Damage to property caused by pointed or sharp objects!
Using pointed or sharp objects when removing packaging material may damage the appliance.
▶ Do not use any pointed or sharp objects to remove the packaging material.

▶ Remove protective films from the interior: Peel the film off flat along the surface of the component to minimise its adhesive force.
▶ Clean the appliance.
▶ Note down the type (model, number), appliance name, appliance/serial number, date of purchase and retailer's address.

16 Connecting the appliance to the power supply

WARNING
Danger of electric shock and injury due to damaged appliance or damaged mains cable!
Danger of cuts and fatal injuries. If the appliance or the mains cable is damaged during transport, you may be electrocuted. You could also cut yourself on damaged parts of the appliance housing.
▶ Check the appliance and the mains cable for damage after transport.
▶ Never put the appliance into operation if the appliance or the mains cable are damaged.
▶ Contact Customer Service.

You can connect your appliance to the mains using the power cable supplied separately. The mains power cable has an appliance coupler at one end and a mains plug at the other end.

Make sure that the following requirements are fulfilled:
- The appliance and power cable are undamaged.
- The appliance is installed in accordance with the regulations. (see 13 Recessed installation)
- Requirements for the electrical connection are met.
- Dimensions for connection in accordance with regulations are known and observed.
- Mains voltage and frequency correspond to the specifications on the type plate.
- The socket is earthed according to the regulations and fused.
- The fuse tripping current is between 10 A and 16 A.

NOTICE
Danger of damage to incorrect operation!
Damage to the electrical components of the appliance.
▶ Only use the supplied mains cable.

WARNING
Danger of fire due to incorrect connection!
Burns.
Damage to the appliance.
▶ Do not use an extension cable.
▶ Do not use distributor blocks.

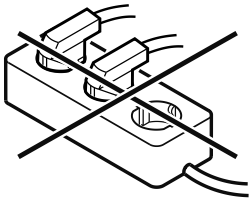

NOTICE
Danger of damage to incorrect connection!
Damage to the appliance.
▶ Do not connect the appliance to a stand-alone inverter, e.g. solar power systems and petrol generators.

▶ Connect the mains cable plug to the power supply. Ensure that the plug is tightly in the socket.
▷ If no action occurs within 60 seconds: The standby symbol fades or disappears.*
▷ The appliance is connected. For information regarding first use, see the following section or the operating instructions.

17 Disposing of packaging

WARNING
Danger of suffocation due to packing material and plastic film!
▶ Do not allow children to play with packing material.

The packaging is made of recyclable materials:
- corrugated board/cardboard
- expanded polystyrene parts
- polythene bags and sheets
- polypropylene straps
- nailed wooden frame with polyethylene panel*
▶ Take the packaging material to an official collecting point.

home.liebherr.com/fridge-manuals

EN integrated wine fridges

Issue date: 20260909

Part number index: 7088595-00

Liebherr-Hausgeräte GmbH
Memminger Straße 77-79
88416 Ochsenhausen
Deutschland