Installation Guide

Quality, Design and Innovation

home.liebherr.com/fridge-manuals

LIEBHERR

Contents

1 General safety instructions **2**

2 Installation requirements **3**
2.1 Installation site 3
2.2 Position in space 3
2.3 Insert under worktop 3

3 Appliance dimensions **3**

4 Recess dimensions **4**

5 Unit front **4**
5.1 Unit front weight 4
5.2 Unit door 4
5.3 Unit front dimensions 5
5.4 Decorative plate dimensions 5

6 Transporting the appliance **5**
6.1 Transporting the appliance for initial use 5
6.2 Transporting the appliance after initial use 5

7 Unpacking the appliance **5**

8 Replacing the door hinge **5**
8.1 Safety instructions 5
8.2 Tool 6
8.3 Scope of supply 6
8.4 Removing covers 6
8.5 Detaching the closing damper* 6
8.6 Removing the door 6
8.7 Removing the hinges 7
8.8 Relocating the mounting bracket 7
8.9 Relocating the ball pins* 8
8.10 Fitting the hinges 8
8.11 Relocating the upper bracket 8
8.12 Relocating the bottom bracket 9
8.13 Switch lower bracket 9
8.14 Fitting the door 10
8.15 Fitting the closing damper* 10
8.16 Putting on the covers 10

9 Recessed installation **11**
9.1 Tool 11
9.2 Scope of supply 11
9.3 Preparing the appliance 11
9.4 Screwing the appliance to the ceiling 12
9.5 Fixing the appliance on the side 12
9.6 Aligning the appliance 12
9.7 Fitting the base 13
9.8 Screwing the appliance into the niche 13

10 Fitting the unit door **13**

11 After installation **14**

12 Connecting the appliance to the power supply **15**

13 Disposing of packaging **15**

The manufacturer is continually working on the further development of all types and models. Please be aware that we reserve the right to make changes to the shape, equipment and technology.

Symbol	Explanation
	Read instructions Please read the information in these instructions carefully to understand all of the benefits of your new appliance.
	Additional information on the Internet The digital manual with additional information and in other languages can be found via the QR code on the front of the manual or by entering the service number at **home.liebherr.com/fridge-manuals**. The service number can be found on the serial tag: 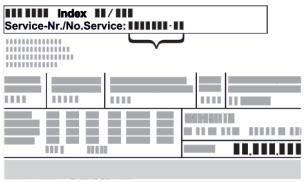 *Fig.* Example illustration
	Check appliance Check all parts for transport damage. If you have any complaints, please contact your agent or customer service.
	Differences These instructions apply to a range of models, so differences are possible. Sections that apply to certain models only are marked with an asterisk (*).
	Instructions and results Instructions are marked with a ▶. Results are marked with a ▷.
	Videos Videos about the appliances are available on the YouTube channels of Liebherr-Hausgeräte.

Open source licences:

The appliance contains software components that use open source licences. Information on the open source licences used can be found here: **home.liebherr.com/open-source-licences**

1 General safety instructions

- Please keep this assembly manual in a safe place so you can refer back to it at any time.
- If you pass the appliance on, please hand this assembly manual to the next user.
- Read this assembly manual carefully before installation and use to ensure safe and correct use of the appliance. Follow the instructions, safety instructions and warning messages included at all times. They are important for ensuring you can operate and install the appliance safely and without any problems.
- First read the general safety instructions in the “General safety instructions” section of the **operating instructions**, which accompany these installation instructions, and follow them. If you cannot find the **operating instructions**, you can download the **operating instructions** from the internet by entering the service number at **home.liebherr.com/fridge-manuals**.

*** Depending on model and options**

The service number can be found on the serial tag:

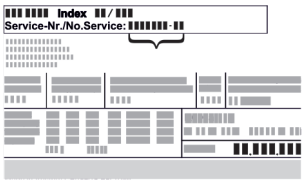

- **Observe the warning messages and other detailed information in the other sections when installing the appliance:**

⚠	DANGER	identifies a situation involving direct danger which, if not obviated, may result in death or severe bodily injury.
⚠	WARNING	identifies a dangerous situation which, if not obviated, may result in death or severe bodily injury.
⚠	CAUTION	identifies a dangerous situation which, if not obviated, may result in minor or medium bodily injury.
	NOTICE	identifies a dangerous situation which, if not obviated, may result in damage to property.
	Note	identifies useful instructions and tips.

2 Installation requirements

The installation conditions are crucial to ensure that you can operate your appliance safely, efficiently and without problems.

- Observe all safety instructions.
- Consider the location and position in the room.

⚠ **WARNING**
Danger of fire due to incorrect positioning!
If the mains cable or plug touches the back of the appliance, the vibration can damage the mains cable or the plug resulting in a short circuit.
▶ Make sure the mains cable is not trapped under the appliance when you position the appliance.
▶ Stand the appliance so that it is not touched by connectors or main cables.
▶ Do not connect any appliances to sockets in the area of the back of the appliance.
▶ Do **not** place and operate multi-sockets/power distributors and other electronic devices (such as halogen transformers) at the back of the appliances.

⚠ **WARNING**
Fire hazard due to dampness!
If live parts or the mains lead become damp this may cause short circuits.
▶ The appliance is designed for use in enclosed areas. Do not operate the appliance outdoors or in areas where it is exposed to splash water or damp conditions.

⚠ **WARNING**
Risk of fire due to leaking refrigerant and oil!
The refrigerant inside the appliance is environmentally friendly, but flammable. The oil it contains is also flammable. Escaping refrigerant and oil can ignite in high concentrations and in contact with an external heat source.
▶ Do not damage the refrigerant circuit pipes or the compressor.

2.1 Installation site

- Only set up and use the appliance in enclosed spaces.
- Only operate the appliance when it is installed.
- If the appliance is installed in a very damp environment, condensation may form on the appliance exterior. Always make sure there is good ventilation and aeration at the installation site.
- The more refrigerant there is in the appliance, the larger than room must be in which it is located. In rooms that are too small, a leak can product a flammable gas/air mixture. For every 8 g of refrigerant, the installation room must be at least 1 m^3 in size. Information on the refrigerant contained is given on the type plate inside the appliance.
- The floor on which the appliance stands must be horizontal and level.

2.2 Position in space

- Do not install the appliance in direct sunlight or near radiators or similar sources of heat.
- You can install the appliance directly next to an oven.
- If the appliance is installed directly next to an oven, the energy consumption may increase slightly. This is dependent on the service life and usage intensity of the oven.
- If you install the appliance in a island unit, appliances with an integrated exhaust air system can damage the appliance. Either ensure separate air ducting or install a partition wall between the appliances.
- Use in hazardous areas is not permitted.

2.3 Insert under worktop

- If you are installing the appliance in a kitchen unit that is standing on uneven ground: Levelling kitchen furniture.

3 Appliance dimensions

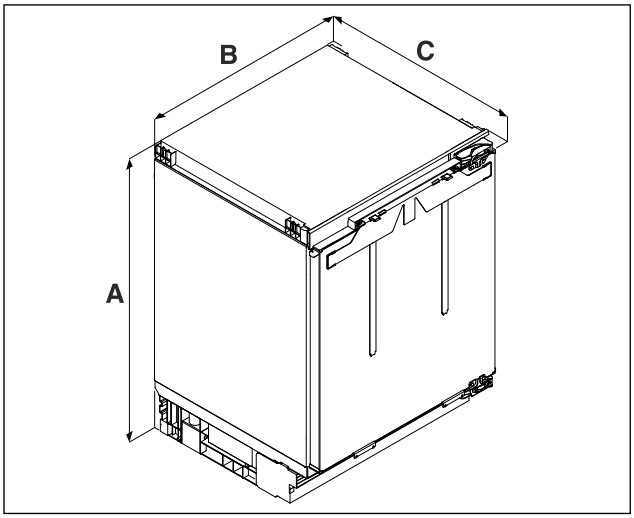

Fig. 1 Example illustration

(A) Appliance height including feet
(B) Appliance width
(C) Appliance depth

	U.. 36..[A]	U.. 37..[A]
A	819 mm	859 mm
B	597 mm	
C	556 mm	

[A] Appliance type designation

4 Recess dimensions

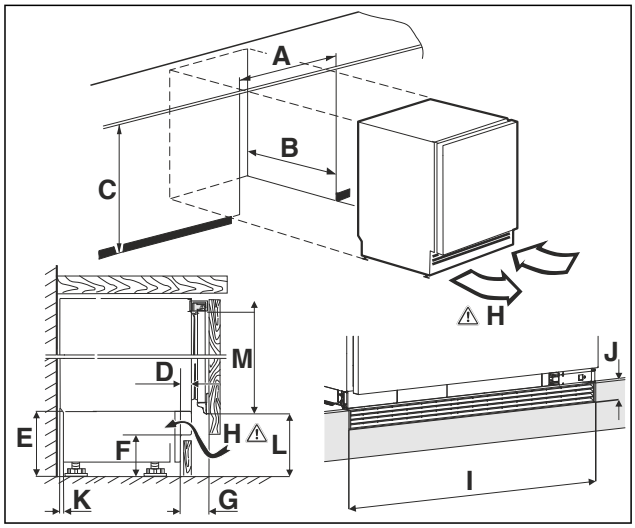

Fig. 2 Example illustration

(A) Niche width
(B) Niche depth
(C) Niche height
(H) Ventilation cross-section

A	600 mm	
B	min. 560 mm	
C	**U.. 36..:**[A] 820 mm to 880 mm	**U.. 37..:**[A] 860 mm to 920 mm
D	11 mm to 66 mm	
E	100 mm to 160 mm	
F	60 mm to 120 mm	
G	54 mm to 109 mm	
H	150 cm²	
I	600 mm	
J	40 mm	
K	18 mm	
L	**SDUFD 3603 / DURD 3600 / DuRd 3601:** 99 mm to 159 mm **SUFd 3603 / SUFNd 365i / SUFNh 3653 / URd 3600 / URh 3600 / URD 365i / URd 3601 / URh 365i:** 104 mm to 164 mm **URPh 365i / URPd 356i / SUFNPc 365i:** 126 mm to 186 mm **SUFNc 375i / SUFc 3703 / URc 3700 / URC 375i /URC 3701 / SUBa 375i / URh 375i / URPc 375i:** 104 mm to 164 mm	
M	**SDUFD 3603 / DURD 3600 / DuRd 3601:** 752 mm **SUFd 3603 / SUFNd 365i / SUFNh 3653 / URd 3600 / URh 3600 / URD 365i / URd 3601 / URh 365i:** 705 mm **URPh 365i / URPd 356i / SUFNPc 365i:** 680 mm **SUFNc 375i / SUFc 3703 / URc 3700 / URC 375i /URC 3701 / SUBa 375i / URh 375i / URPc 375i:** 744 mm	

[A] Appliance type designation

5 Unit front

5.1 Unit front weight

NOTICE
A heavy unit door may pose a risk of damage!
If the unit door is too heavy, damage to the hinges cannot be ruled out, which may compromise functionality.
▶ Before fitting the unit door, ensure that the unit door does not exceed the permissible weight.

Niche height	Maximum weight of the unit door
.. 36..[A]	10 kg
.. 37..[A]	10 kg

[A] Appliance type designation

5.2 Unit door

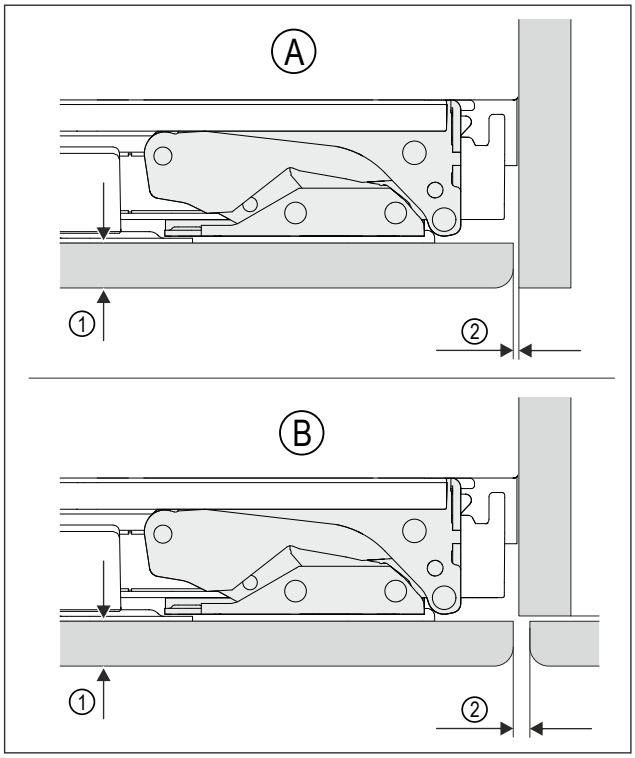

Fig. 3 Example illustration

(A) Niche with wall
(B) Niche with neighbouring furniture
(1) Front thickness
(2) Gap dimension

*** Depending on model and options**

Front thickness	At least 16 mm to max. 19 mm
Gap dimension	At least 3 mm
The unit door must be flat and mounted without tension.	

5.3 Unit front dimensions

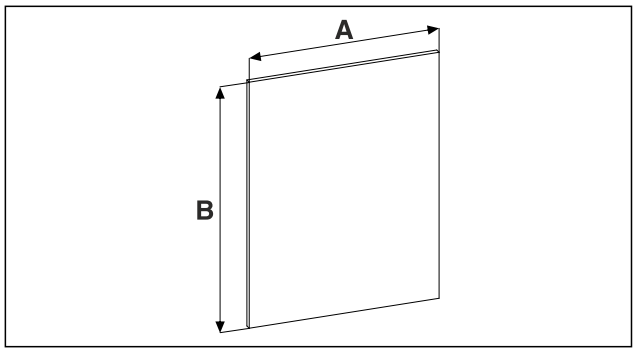

Fig. 4

Niche height	.. 36..	.. 37..
A	At least 595 mm	
B	At least 711 mm Maximum value may not be less than the ventilation cross-section of 150 cm².	At least 757 mm Maximum value may not be less than the ventilation cross-section of 150 cm².

A) Appliance type designation

5.4 Decorative plate dimensions

The decorative plate is pushed into the frame that is already fitted to the support plate. The support plate is supplied with the appliance. The support plate with the decorative plate is then installed on the appliance.

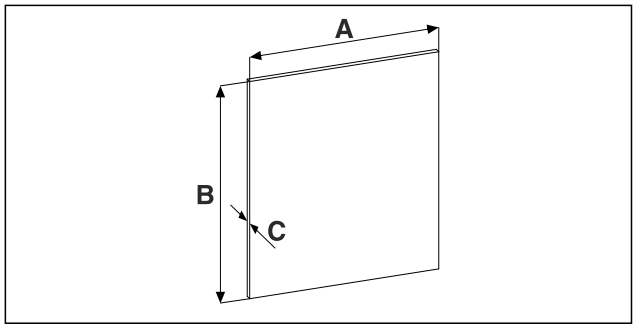

Fig. 5

Niche height	.. 36..
A	585 mm
B	678 mm
C	maximum 4 mm

A) Appliance type designation

6 Transporting the appliance

6.1 Transporting the appliance for initial use

Ensure that the following requirements are met:

- ❑ The appliance is packaged.
- ❑ The appliance is upright.

▶ Transport the appliance with the help of two people.
▶ Unpacking the appliance. (see 7 Unpacking the appliance)

6.2 Transporting the appliance after initial use

Observe the following instructions if you wish to transport or move the appliance again after initial use.

Ensure that the following requirements are met:

- ❑ The appliance is emptied.
- ❑ The appliance is upright.
- ❑ Appliance with door(s): Door is secured against accidental opening.
- ❑ Appliance with telescopic unit: The telescopic unit is secured against accidental opening.
- ❑ Appliance is removed.

▶ Transport the appliance with the help of two people.

7 Unpacking the appliance

NOTICE
Risk of damage if the unit is moved!
If you move the unit across the floor without any protection, it may damage the floor.
▶ Make sure you cover the floor properly before removing the packaging from the unit.

▶ Check the appliance and packaging: If you suspect that the goods have been damaged in transit, please contact the supplier before connecting them.

NOTICE
Damage to property caused by pointed or sharp objects!
Using pointed or sharp objects when removing packaging material may damage the appliance.
▶ Do not use any pointed or sharp objects to remove the packaging material.

▶ Remove the packaging materials.

8 Replacing the door hinge

8.1 Safety instructions

WARNING
Risk of injury if the door is not reversed correctly!
▶ Replace the door hinge with specialist personnel.

WARNING
Risk of injury and material damage due to door weight!
▶ Only change the door hinge if you can carry a weight of 15 kg.
▶ Change the door hinge with two people.

NOTICE
Live parts!
Damage to electrical components.
▶ Remove the mains plug before you reverse the door.

8.2 Tool

8.3 Scope of supply

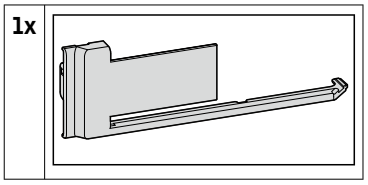

8.4 Removing covers

▶ Open the door.

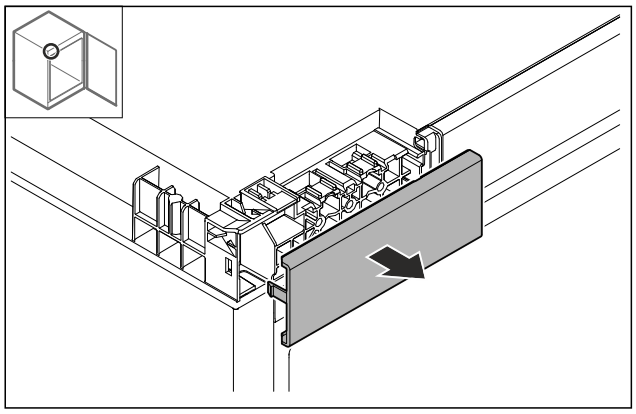

Fig. 6
▶ Remove cover.

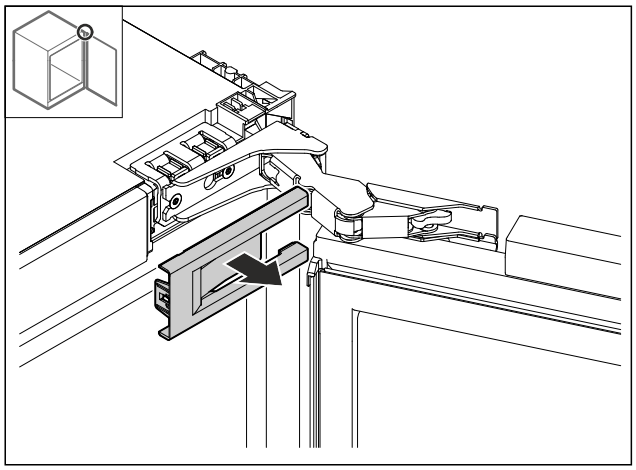

Fig. 7
▶ Remove cover.

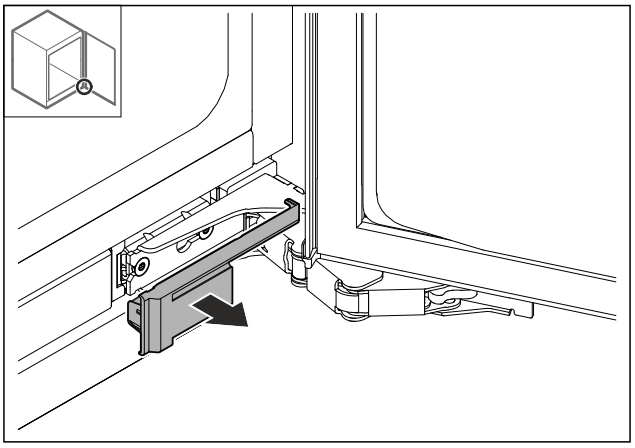

Fig. 8
▶ Remove cover.

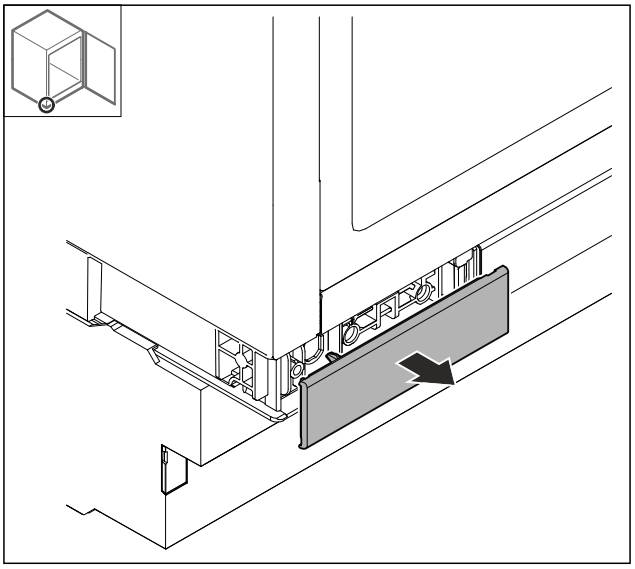

Fig. 9
▶ Remove cover.

8.5 Detaching the closing damper*

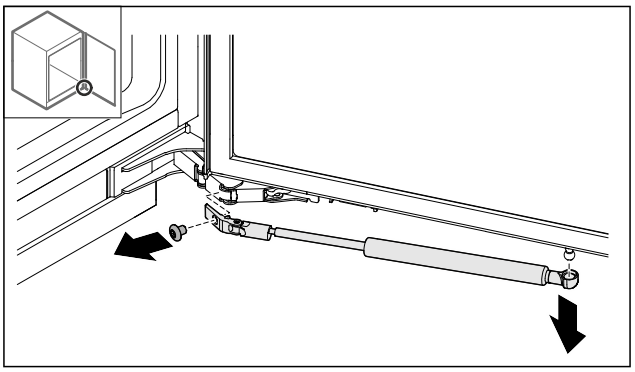

Fig. 10
▶ Remove the screw.
▶ Take off the closing damper downwards.

8.6 Removing the door

NOTICE
Risk of injury if the door tips out!
▶ Hold the door.

*** Depending on model and options**

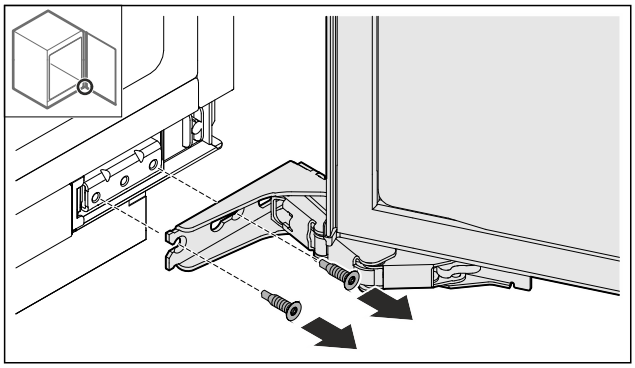

Fig. 11

▶ Remove the screws.

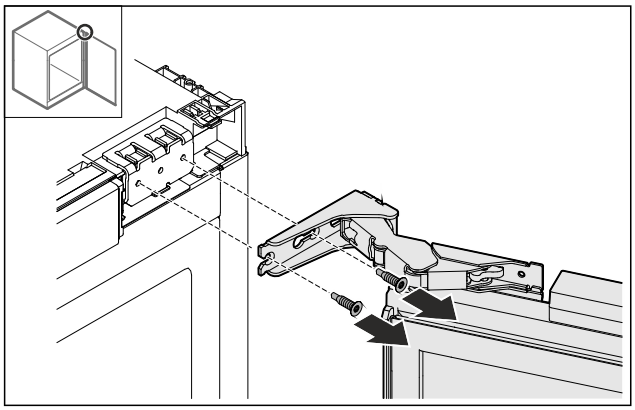

Fig. 12

▶ Remove the screws.
▶ Remove the door.
▶ Place the door on a soft surface.

8.7 Removing the hinges

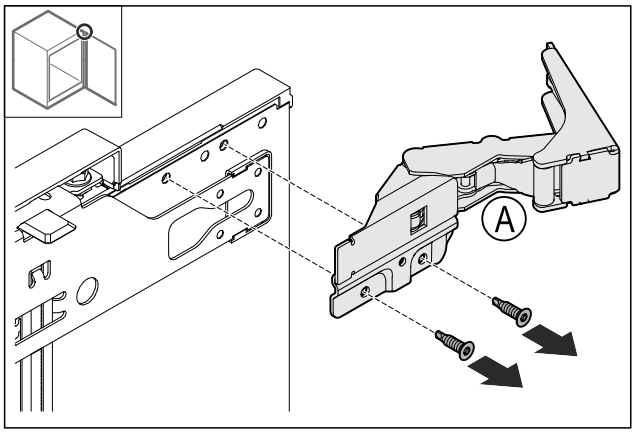

Fig. 13

▶ Remove the screws.

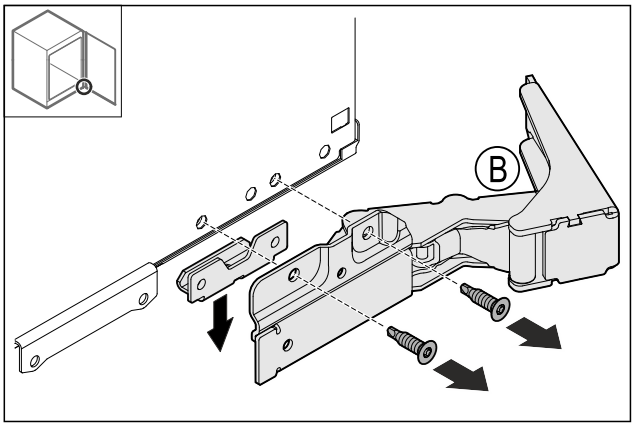

Fig. 14

▶ Remove the screws.

8.8 Relocating the mounting bracket

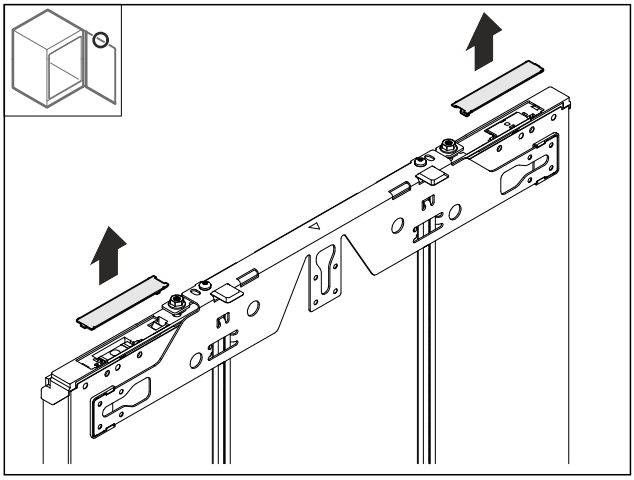

Fig. 15

▶ Detach the covers.

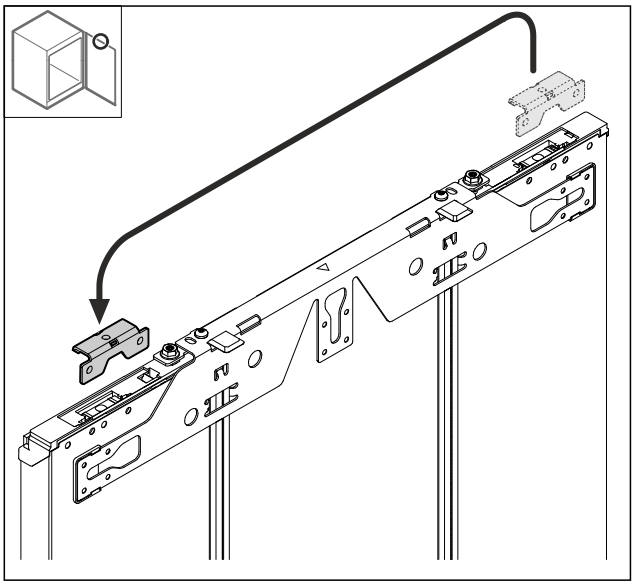

Fig. 16

▶ Relocate the lower bracket.

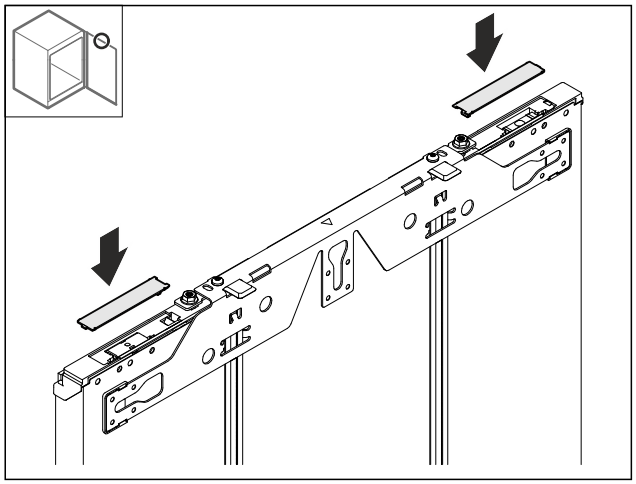

Fig. 17

▶ Fit the covers.

8.9 Relocating the ball pins*

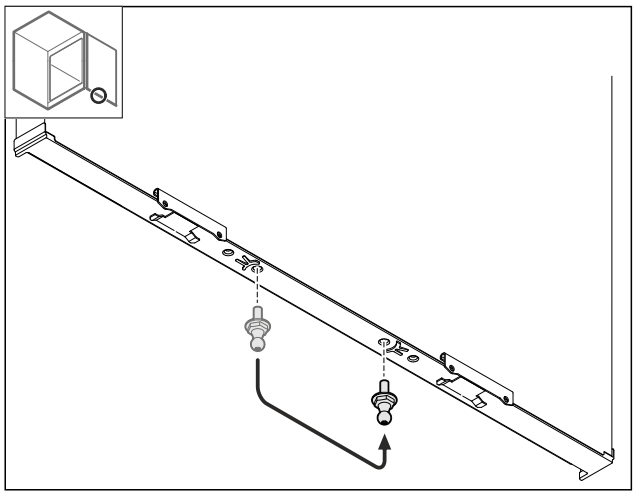

Fig. 18

▶ Relocate the ball pins.

8.10 Fitting the hinges

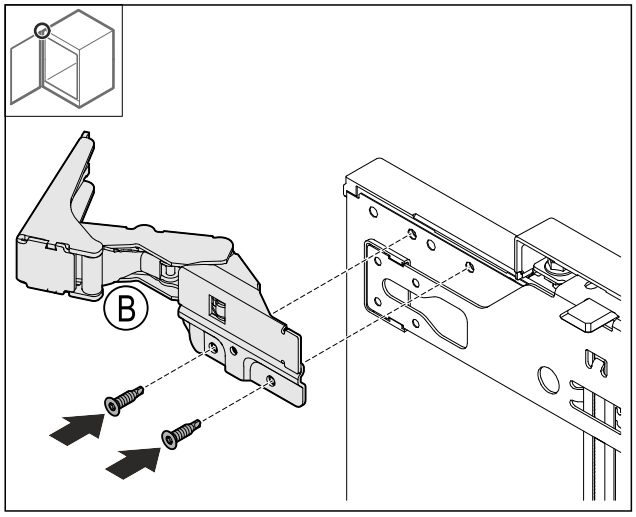

Fig. 19

▶ Screw on the hinge.

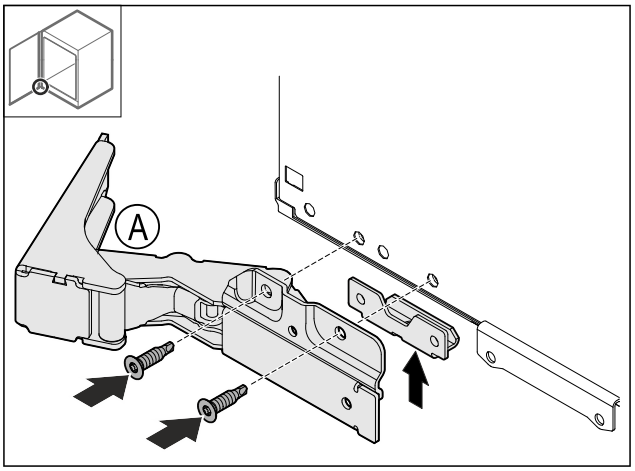

Fig. 20

▶ Screw on the hinge.

8.11 Relocating the upper bracket

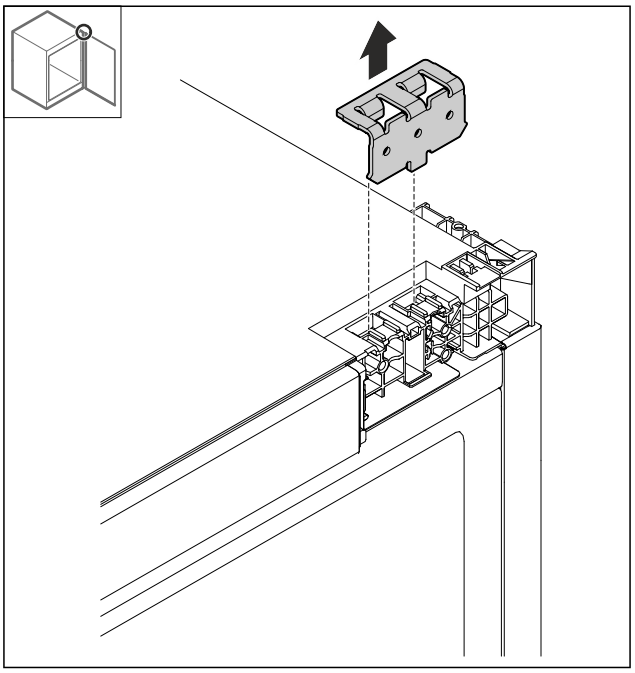

Fig. 21

▶ Remove the bracket.

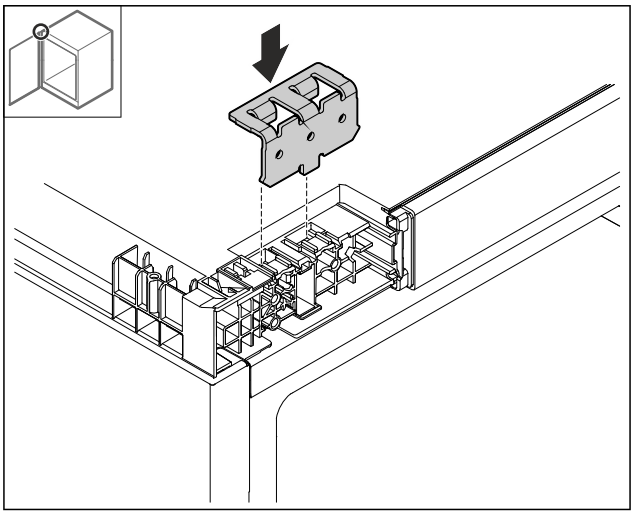

Fig. 22

▶ Insert the bracket.

8.12 Relocating the bottom bracket

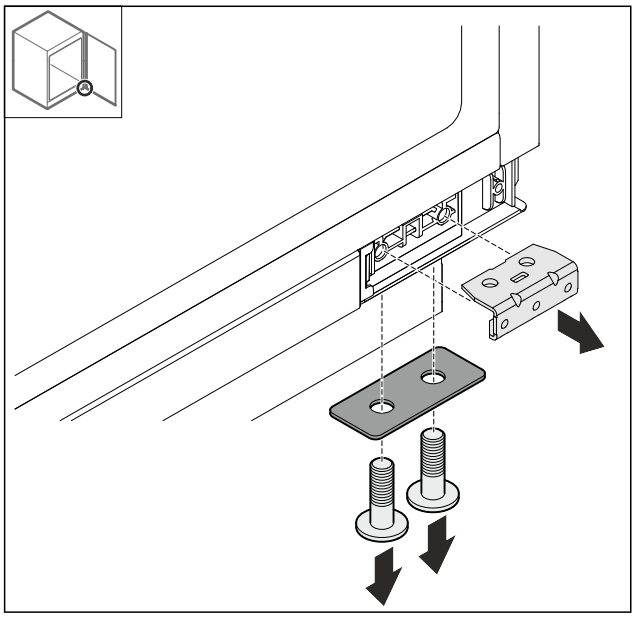

Fig. 23

▶ Detach the bracket.

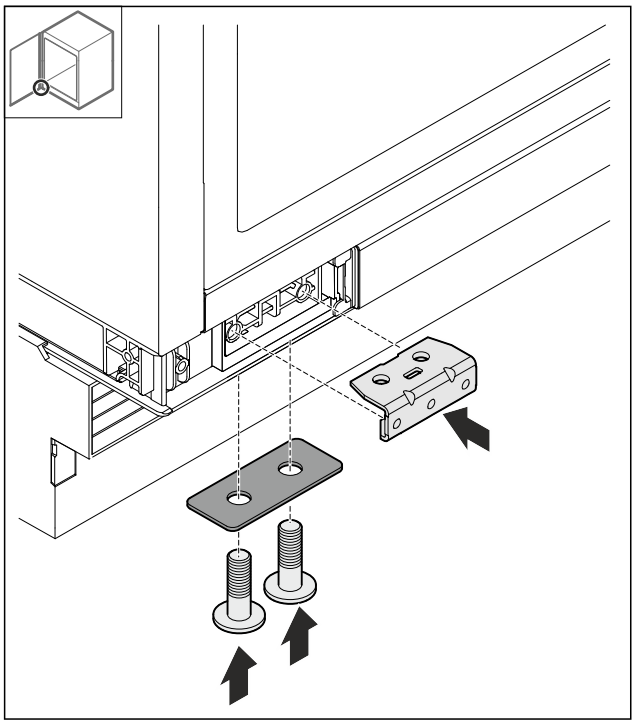

Fig. 24

▶ Fit the bracket.

8.13 Switch lower bracket

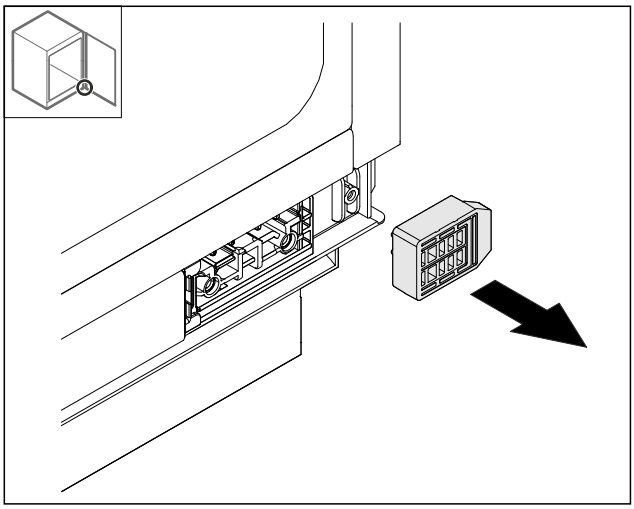

Fig. 25

▶ Remove the bracket.

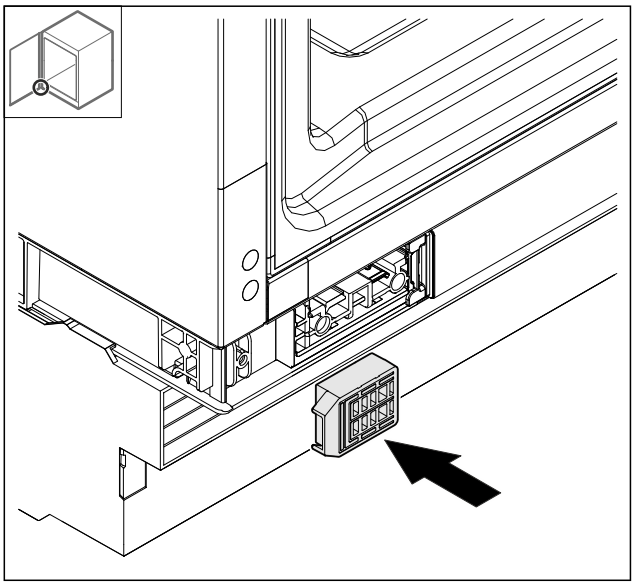

Fig. 26

▶ Insert the bracket.

8.14 Fitting the door

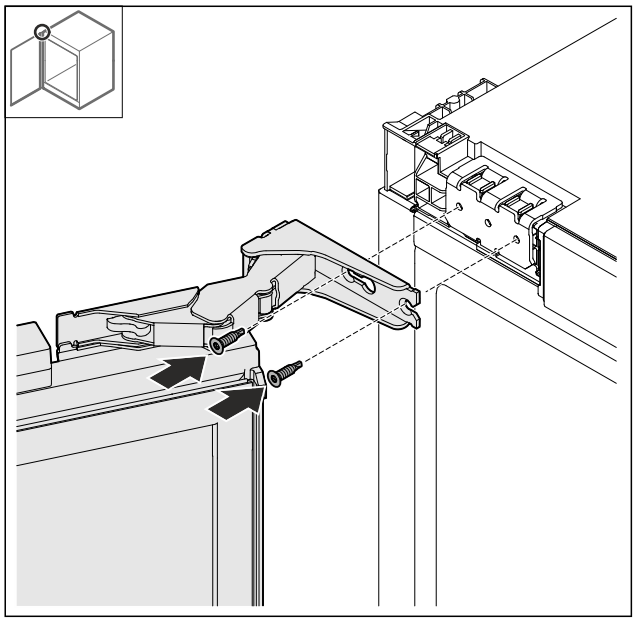

Fig. 27

▶ Screw on door at the top.

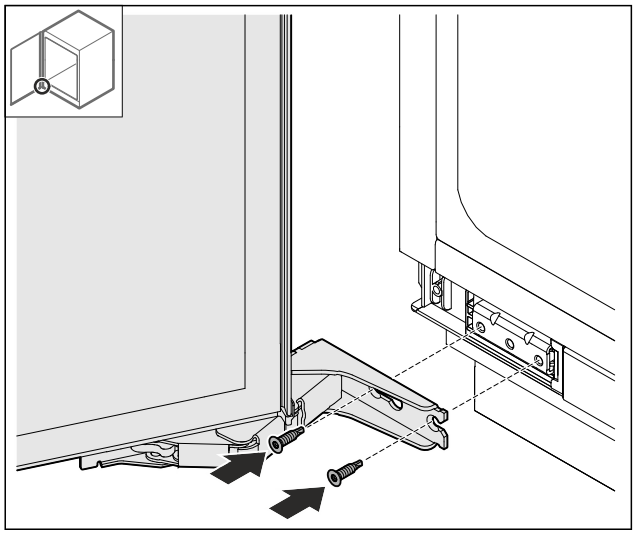

Fig. 28

▶ Screw on door at the bottom.

8.15 Fitting the closing damper*

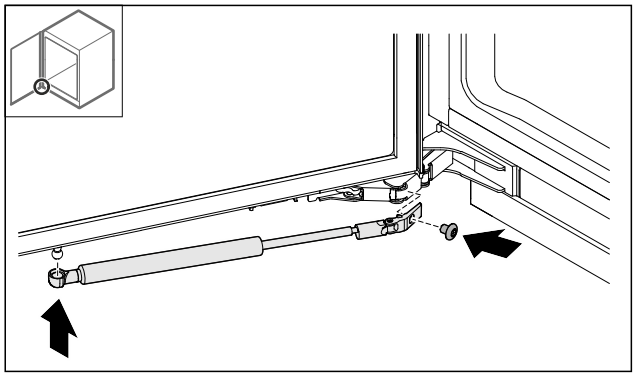

Fig. 29

▶ Engage the closing damper on the ball pins.

▶ Screw on the closing damper.

8.16 Putting on the covers

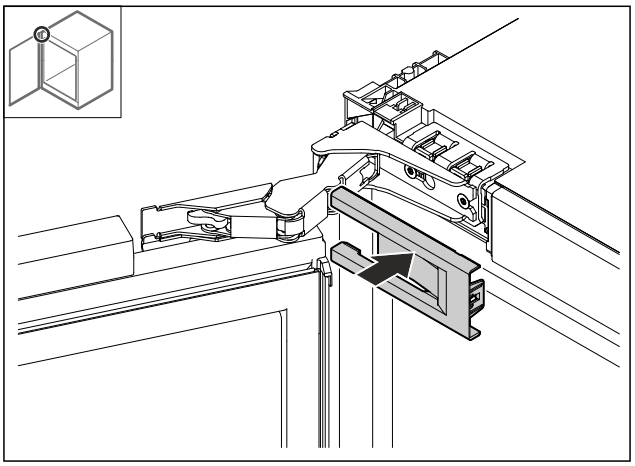

Fig. 30

▶ Put on the cover.

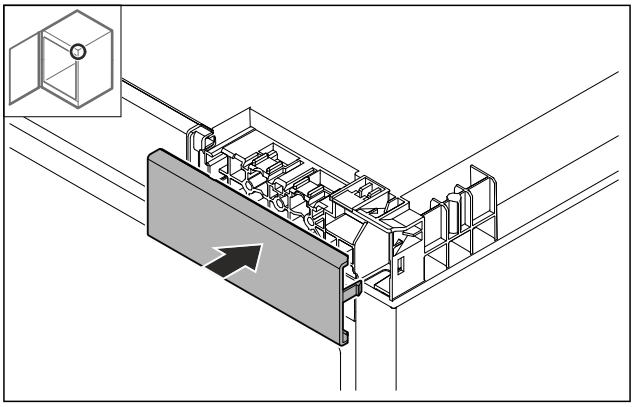

Fig. 31

▶ Put on the cover.

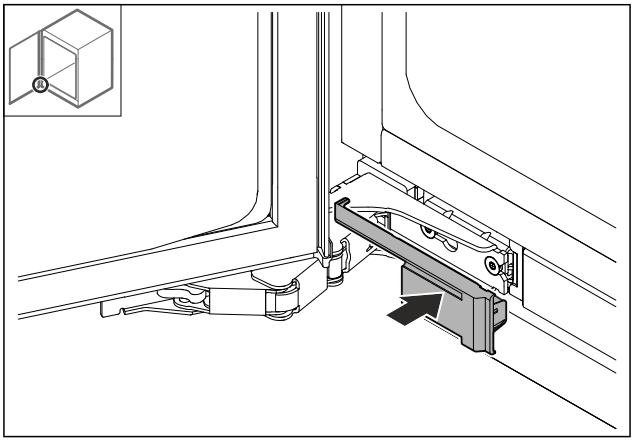

Fig. 32

▶ Put on the cover.

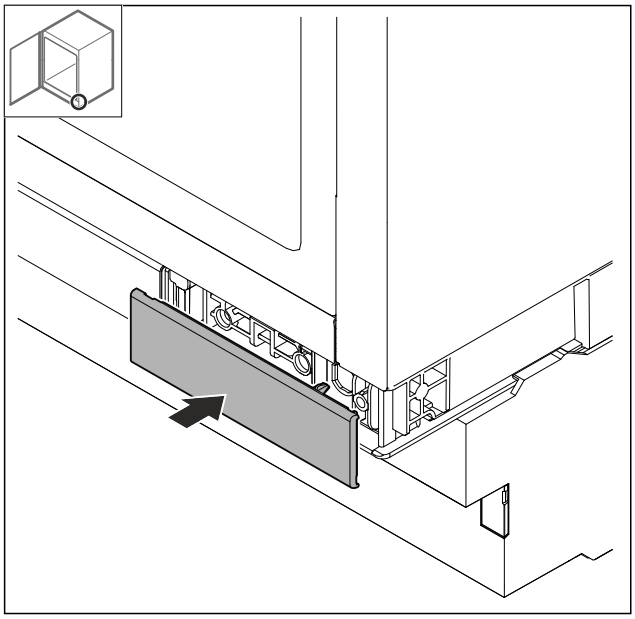

Fig. 33

▶ Put on the cover.

9 Recessed installation

9.1 Tool

Before installing the appliance in the niche, note the fixing method:	
Lateral fixing	**Ceiling mounting**
Substructure under a hard worktop such as granite	No granite slab
The appliance is lower than the worktop when the adjustable feet are fully extended.	Appliance sits slightly braced under worktop when adjustable feet are fully extended.
Appliance side panel available for screwing.	

9.2 Scope of supply

1x	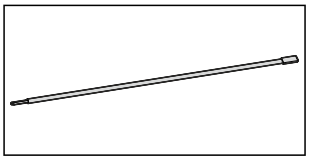

1x	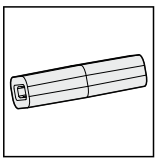
2x	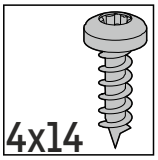
2x	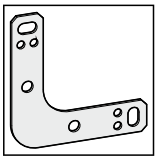
2x	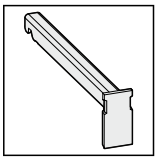

9.3 Preparing the appliance

Before installing the appliance in a niche, make sure that the following requirements are met:

❑ The door hinge has been hung. You can only change the door hinge from the outside of the niche because you need enough space to do so.

▶ Plug the mains cable's IEC socket completely into the appliance plug on the back of the appliance.

▶ Ensure that the IEC socket is tight.

▶ Use a cord to lay the mains plug to a freely accessible socket.

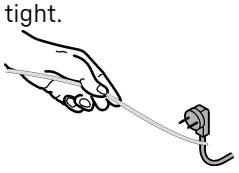

Fig. 34

NOTICE

Risk of damage if the appliance is moved!

If you move the appliance, you may damage the floor or the appliance's adjustable feet may break off.

Before moving:

▶ Screw in the levelling feet completely.

▶ Place a cardboard strip (e.g. packaging) with approx. 100 mm x 600 mm under each of the adjustable feet.

When moving:

▶ Move the appliance carefully.

▶ For uneven floors: Carefully lift the appliance.

After moving:

▶ Remove the cardboard strips.

9.4 Screwing the appliance to the ceiling

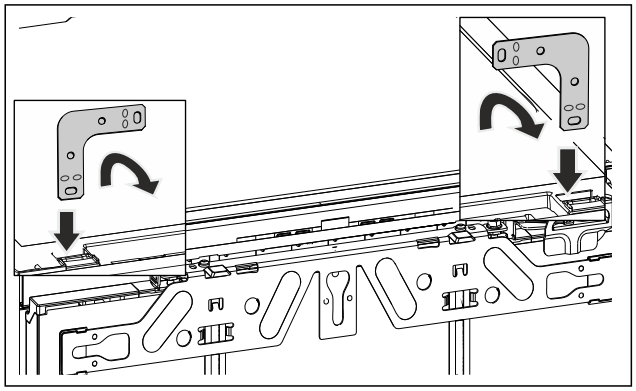

Fig. 35 Example illustration

▶ Insert the bracket into the opening in the unit ceiling and bend it forwards.

WARNING

Risk of fire due to short circuit!

▶ When you push the appliance into the niche: do not kink, jam or damage the mains cable.

▶ The appliance must not be operated with a defective mains cable.

▶ Slide the appliance into the recess and align, see point (see 9.6 Aligning the appliance) .

9.5 Fixing the appliance on the side

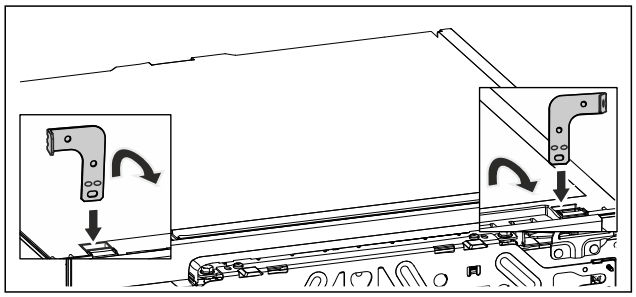

Fig. 36 Example illustration

▶ Bend one end of each bracket before installation. Insert the straight side into the opening in the appliance cover and bend it forwards.

WARNING

Risk of fire due to short circuit!

▶ When you push the appliance into the niche: do not kink, jam or damage the mains cable.

▶ The appliance must not be operated with a defective mains cable.

▶ Slide the appliance into the recess and align, see point (see 9.6 Aligning the appliance) .

9.6 Aligning the appliance

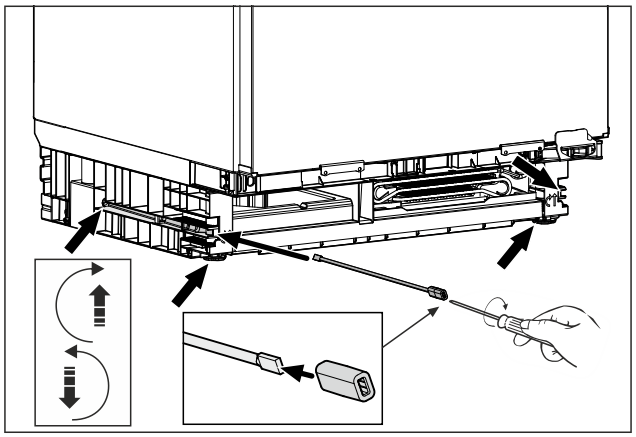

Fig. 37 Example illustration

▶ Unscrew the levelling feet to below the worktop.

▶ Align the appliance in an upright position using a spirit level.

▶ Keep the rod with adapter piece to remove the appliance.

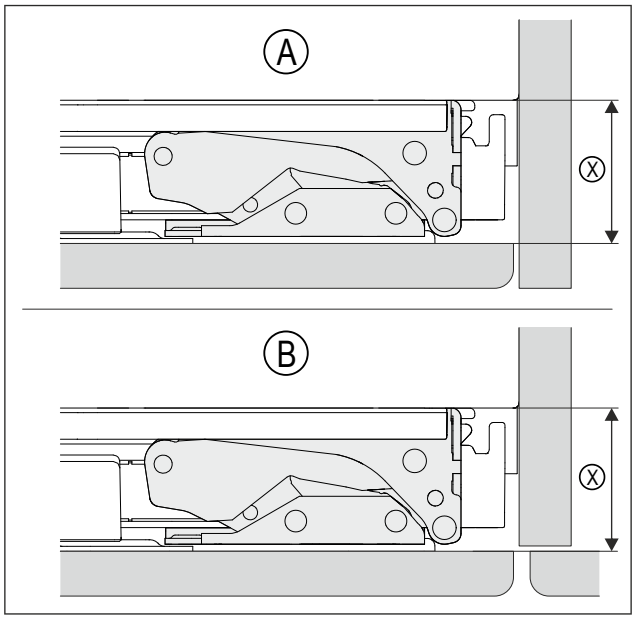

Fig. 38 Example illustration

(A) Niche with wall

(B) Niche with neighbouring furniture

(X) is the distance between the body of the appliance and the rear of the mounted furniture front

▶ Check that the distance (X) corresponds to installation situation (A) or (B).

(X)	42 mm
If there is no unit side panel, orientate on the worktop.	

▶ Unscrew the levelling feet alternately to the maximum. The maximum adjustment travel is 60 mm.

▷ Appliance is aligned upright.

▷ The appliance is slightly braced in the recess between the floor and worktop.

9.7 Fitting the base

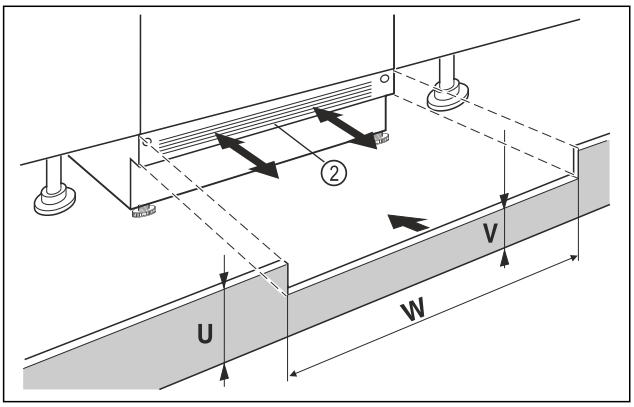

Fig. 39 Example illustration

▶ Put on the appliance base cover *Fig. 39 (2)* but do not fix it in place yet.
▶ Position the unit door and unit base panel for testing
▶ If the base panel is visible *Fig. 39 (2)*, pull it forwards so that the front edge of the ventilation grille and the unit base panel are level.

-or-

▶ If the base panel is concealed *Fig. 39 (2)*, push it all the way back.

▶ Ensure that the ventilation slots are completely free: If necessary, cut the height of the unit base panel *Fig. 39 (U)* to size!
▷ Adjust the web height *Fig. 39 (V)*under the appliance base panel *Fig. 39 (2)*along the niche width *Fig. 39 (W)*.

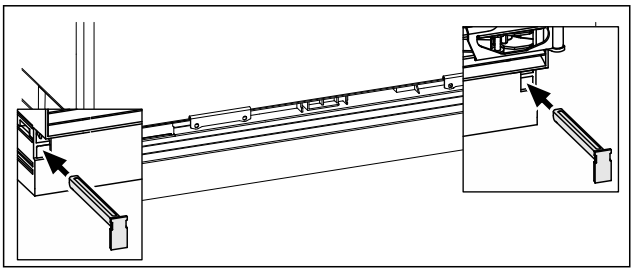

Fig. 40 Example illustration

▶ Fix the appliance base panel: Insert the latch while holding the appliance base panel.
▶ Fasten the unit base panel.

9.8 Screwing the appliance into the niche

Ceiling mounting:

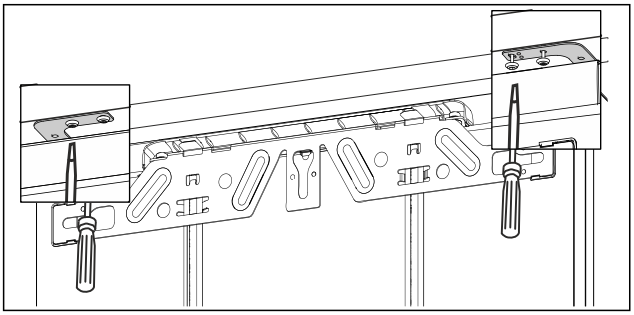

Fig. 41 Example illustration

▶ For mounting under the worktop, screw on the mounting brackets with two screws each underneath the worktop.

Lateral fixing:

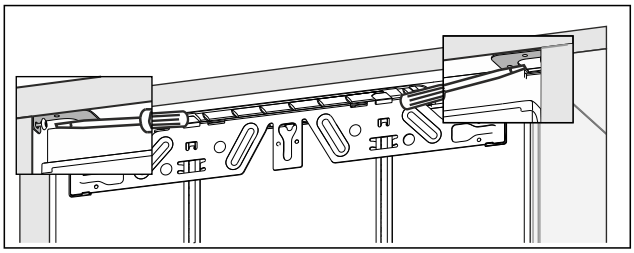

Fig. 42 Example illustration

▶ For side mounting, screw the mounting bracket into the niche with one screw on the right and one on the left.

10 Fitting the unit door

Tool

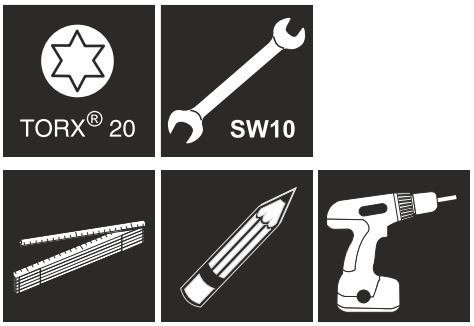

Scope of supply

1x	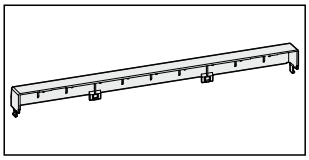
6x	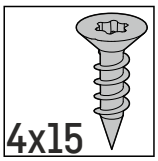
4x	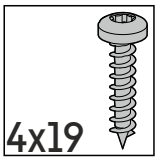

▶ Fit the handle to the unit door.

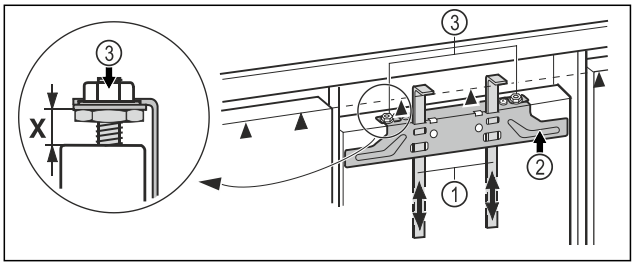

Fig. 43

▶ Check the default setting of **X = 8 mm**. (Distance between appliance door and lower edge of traverse)
▶ Push the assembly aids *Fig. 43 (1)* up to unit door height. Lower stop edge ▲ of the assembly aid = upper edge of the unit door to be assembled.
▶ Unscrew the fastening bar *Fig. 43 (2)* using the lock nuts *Fig. 43 (3)*.

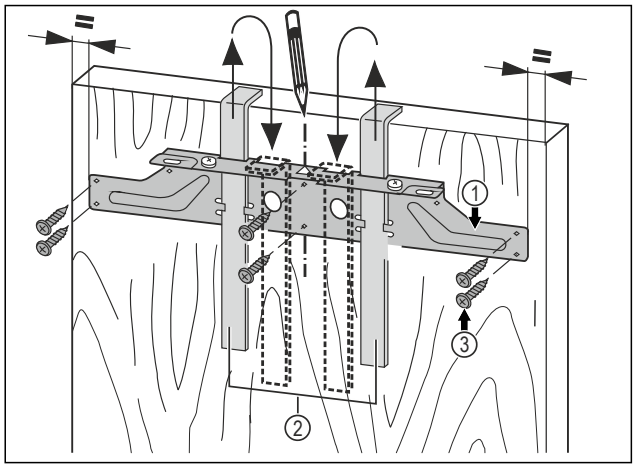

Fig. 44

- ▶ Hang the fastening bar *Fig. 44 (1)* with the mounting aids on the inside of the unit door *Fig. 44 (2)*.
- ▶ Align the fastening bar *Fig. 44 (1)* in the centre of the door.
- ▷ The distances to the outer edge are the same on the left and right.

For chipboard doors:

- ▶ Tighten the mounting bar *Fig. 44 (1)* with at least 6 screws *Fig. 44 (3)*.

For panelled doors:

- ▶ Screw the mounting bar *Fig. 44 (1)*to the edge with 4 screws *Fig. 44 (3)*.
- ▶ Pull the assembly devices *Fig. 44 (2)* upwards and push them, at an angle, into the receiving openings.

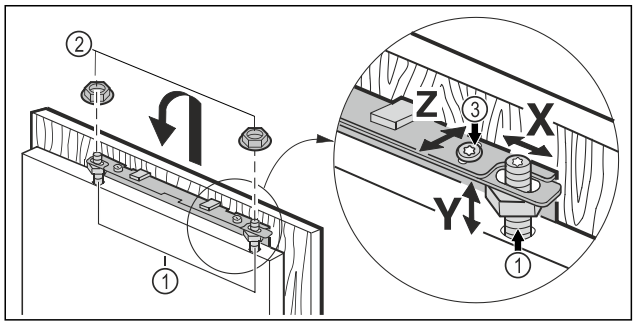

Fig. 45

- ▶ Hook the unit door onto the adjustment bolts *Fig. 45 (1)* and screw the lock nuts *Fig. 45 (2)* loosely onto the adjustment bolts.
- ▶ Close the door.
- ▶ Check the distance of the door against the surrounding unit doors.
- ▶ Align the unit door sideways: Move unit door in **X** direction.
- ▶ Align the unit door in height **Y** and in the lateral inclination: Adjust the adjustment bolt *Fig. 45 (1)* with a screwdriver.
- ▷ The unit door is aligned flush with the surrounding unit doors.
- ▶ Tighten the lock nuts *Fig. 45 (3)*.

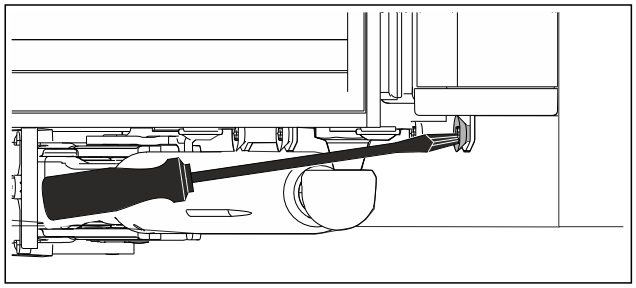

Fig. 46

- ▶ Screw the unit door to the appliance door.
- ▶ Pre-drill the fastening holes in the unit door (if necessary, pre-pierce with a graver).
- ▶ Screw the appliance door to the unit door using screws through the mounting brackets.

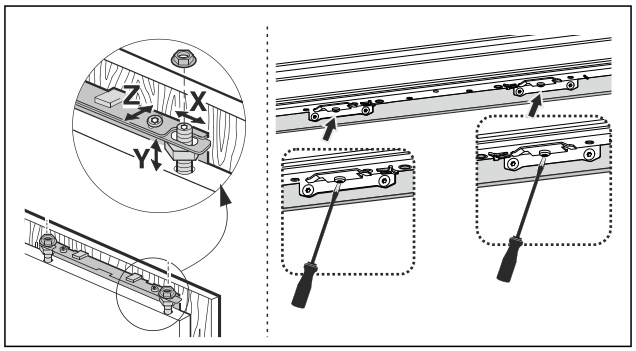

Fig. 47

- ▶ Align the unit door at depth **Z**: loosen the screws at the top and bottom of the door, then move the door.
- ▶ For good access to the screws under the door, open the door approx. 45° wide.
- ▶ Do not allow any burls or sealing lips to touch - this is important for correct function!
- ▶ Allow an air gap of 2 mm between the unit door and the cabiner carcass.

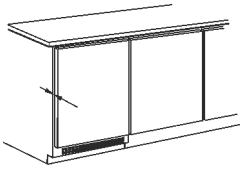

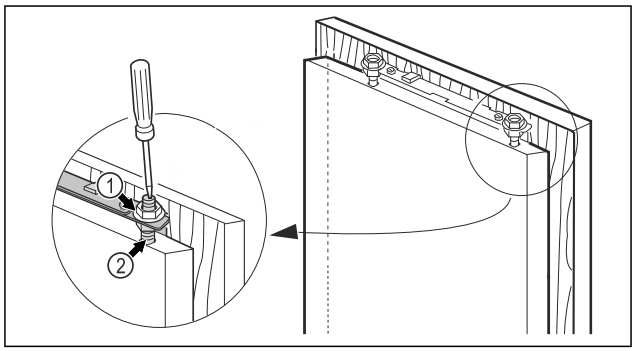

Fig. 48

- ▶ Check the fit of the door and readjust if necessary.
- ▶ Tighten all screws.
- ▶ Tighten the lock nuts *Fig. 48 (1)* with a hexagon spanner 13, stabilising the adjusting bolt *Fig. 48 (2)* with a screwdriver.

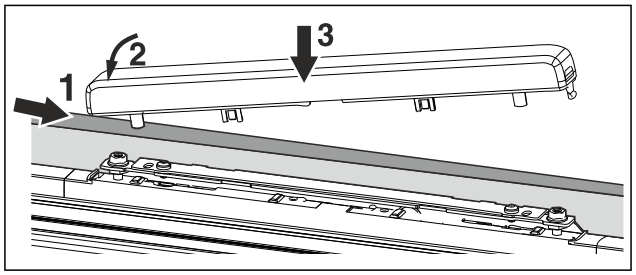

Fig. 49

- ▶ Position the upper cover and engage it.

11 After installation

- ▶ Remove all transport safety fittings from the interior.

NOTICE
Damage to property caused by pointed or sharp objects!
Using pointed or sharp objects when removing packaging material may damage the appliance.
▶ Do not use any pointed or sharp objects to remove the packaging material.

▶ Remove protective films from the interior: Peel the film off flat along the surface of the component to minimise its adhesive force.
▶ Clean the appliance.
▶ Note down the type (model, number), appliance name, appliance/serial number, date of purchase and retailer's address.

12 Connecting the appliance to the power supply

WARNING
Danger of electric shock and injury due to damaged appliance or damaged mains cable!
Danger of cuts and fatal injuries. If the appliance or the mains cable is damaged during transport, you may be electrocuted. You could also cut yourself on damaged parts of the appliance housing.
▶ Check the appliance and the mains cable for damage after transport.
▶ Never put the appliance into operation if the appliance or the mains cable are damaged.
▶ Contact Customer Service.

You can connect your appliance to the mains using the power cable supplied separately. The mains power cable has an appliance coupler at one end and a mains plug at the other end.

Make sure that the following requirements are fulfilled:
- The appliance and power cable are undamaged.
- The appliance is installed in accordance with the regulations. (see 9 Recessed installation)
- Requirements for the electrical connection are met.
- Dimensions for connection in accordance with regulations are known and observed.
- Mains voltage and frequency correspond to the specifications on the type plate.
- The socket is earthed according to the regulations and fused.
- The fuse tripping current is between 10 A and 16 A.

NOTICE
Danger of damage to incorrect operation!
Damage to the electrical components of the appliance.
▶ Only use the supplied mains cable.

WARNING
Danger of fire due to incorrect connection!
Burns.
Damage to the appliance.
▶ Do not use an extension cable.
▶ Do not use distributor blocks.

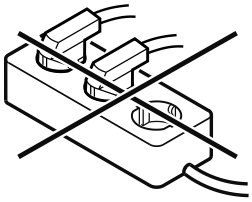

NOTICE
Danger of damage to incorrect connection!
Damage to the appliance.
▶ Do not connect the appliance to a stand-alone inverter, e.g. solar power systems and petrol generators.

▶ Connect the mains cable plug to the power supply. Ensure that the plug is tightly in the socket.
▷ If no action occurs within 60 seconds: The standby symbol fades or disappears.*
▷ The appliance is connected. For information regarding first use, see the following section or the operating instructions.

13 Disposing of packaging

WARNING
Danger of suffocation due to packing material and plastic film!
▶ Do not allow children to play with packing material.

The packaging is made of recyclable materials:
- corrugated board/cardboard
- expanded polystyrene parts
- polythene bags and sheets
- polypropylene straps
- nailed wooden frame with polyethylene panel*
▶ Take the packaging material to an official collecting point.

home.liebherr.com/fridge-manuals

EN base unit fridges and freezers

Issue date: 20260909

Part number index: 7083764-00

Liebherr-Hausgeräte GmbH
Memminger Straße 77-79
88416 Ochsenhausen
Deutschland