User Guide

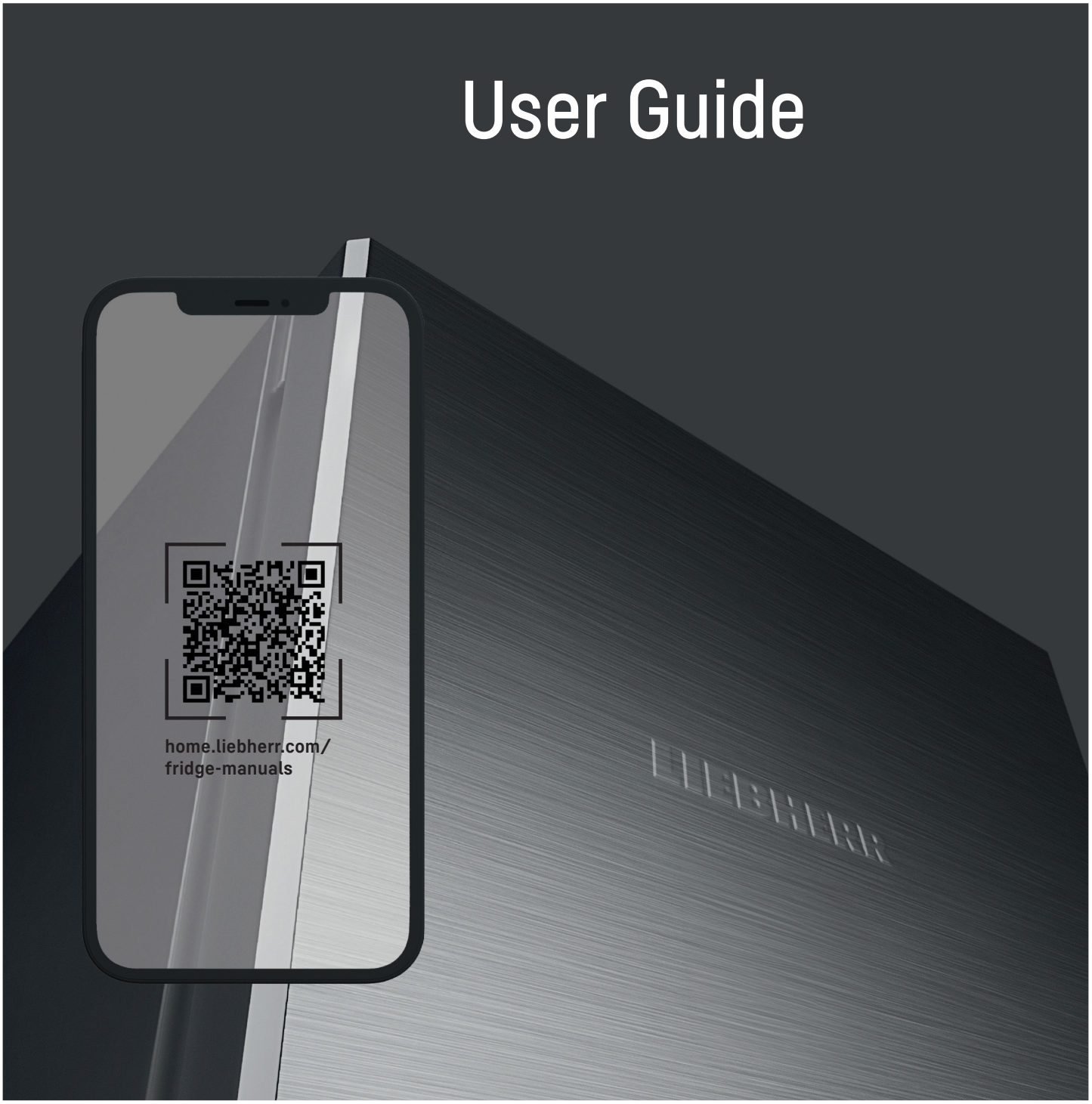

EN ORIGINAL OPERATOR'S MANUAL

LIEBHERR

Contents

1 General safety information ... 3
1.1 Intended use ... 3
1.2 Foreseeable erroneous use ... 3
1.3 User group ... 3
1.4 Warning notices – Risks for the user ... 3
1.5 Faults, damage and repairs ... 4
1.6 Information concerning disposal ... 4
1.7 Conformity ... 4
1.8 Climate classes ... 4
1.9 SVHC substances in accordance with the REACH Regulation ... 4
1.10 EPREL database ... 4
1.11 Open source licences ... 4
1.12 Spare parts ... 5
1.13 Warning levels ... 5

2 Appliance at a glance ... 5
2.1 Scope of delivery ... 5
2.2 Overview of the appliance and equipment ... 5
2.3 SmartDevice ... 5

3 Setting up and connecting ... 6
3.1 Installation requirements ... 6
3.2 Appliance dimensions ... 6
3.3 Recess dimensions ... 6
3.4 Unit front ... 7
3.5 Transporting the appliance ... 8
3.6 Unpacking the appliance ... 8
3.7 Aligning the telescopic unit ... 8
3.8 Installing the appliance in the niche ... 9
3.9 Fitting the unit door ... 14
3.10 After installation ... 15
3.11 Connecting the appliance to the power supply ... 15
3.12 Disposing of packaging ... 16

4 Functionality of the Touch & Swipe display ... 16
4.1 Navigation and symbol explanation ... 16
4.2 Menus ... 16
4.3 Sleep mode ... 17

5 Putting into operation ... 17
5.1 Switching on appliance (first use) ... 17

6 Storage ... 18
6.1 Information regarding storage ... 18
6.2 Fridge section with telescopic unit ... 18
6.3 Storage times ... 18

7 Saving energy ... 18

8 Controls ... 18
8.1 Controls and displays ... 18
8.1.1 Status display ... 18
8.1.2 Display symbols ... 18
8.2 Appliance functions ... 19
8.2.1 Notes on the appliance functions ... 19
Switching the appliance off and on ... 19
Temperature ... 19
SuperCool ... 19
PowerCool ... 20
HolidayMode ... 20
SabbathMode ... 21
EnergySaver ... 21
CleaningMode ... 22
Input lock ... 22
Language ... 22
Temperature unit ... 23
Display brightness ... 23
WiFi ... 23
Device information ... 24
Software ... 24
Door alarm ... 25
Demo mode ... 25
Resetting to factory settings ... 26
8.3 Messages ... 26
8.3.1 Overview of warnings ... 26
8.3.2 Ending warnings ... 26
8.3.3 Overview of reminders ... 27
8.3.4 Ending reminders ... 27

9 Features ... 27
9.1 Drawers ... 27
9.2 Telescopic unit ... 27
9.3 Butter dish ... 28
9.4 Egg rack ... 28
9.5 FlexCube ... 29

10 Maintenance ... 29
10.1 FreshAir carbon filter ... 29
10.2 Disassembling / assembling pull-out systems ... 30
10.3 Defrosting the appliance ... 34
10.4 Cleaning the appliance ... 34

11 Customer help ... 35
11.1 Technical specifications ... 35
11.2 Operating noise ... 35
11.3 Technical fault ... 35
11.4 Customer Service ... 36
11.5 Model plate ... 36

12 Shutting down ... 37

13 Disposal ... 37
13.1 Preparing the appliance for disposal ... 37
13.2 Disposing of the appliance in an environmentally friendly manner ... 37

The manufacturer is continually working on the further development of all types and models. Please be aware that we reserve the right to make changes to the shape, equipment and technology.

Symbol	Explanation
	Read instructions Please read the information in these instructions carefully to understand all of the benefits of your new appliance.

*** Depending on model and options**

Symbol	Explanation
	Additional information on the Internet The digital manual with additional information and in other languages can be found via the QR code on the front of the manual or by entering the service number at **home.liebherr.com/fridge-manuals**. The service number can be found on the serial tag: 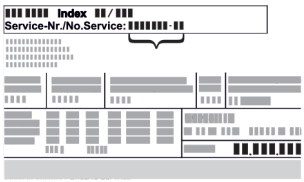 *Fig.* Example illustration
	Check appliance Check all parts for transport damage. If you have any complaints, please contact your agent or customer service.
	Differences These instructions apply to a range of models, so differences are possible. Sections that apply to certain models only are marked with an asterisk (*).
	Instructions and results Instructions are marked with a ▶. Results are marked with a ▷.
	Videos Videos about the appliances are available on the YouTube channels of Liebherr-Hausgeräte.

Open source licences:

The appliance contains software components that use open source licences. Information on the open source licences used can be found here: **home.liebherr.com/open-source-licences**

This user information applies to the following appliances:

URP..	3..i

1 General safety information

Keep this user information in a safe place so that you can refer to it at any time.

If you pass on the appliance, pass this user information on to subsequent owners.

To use the appliance properly and safely, read this user information carefully before installation and use. Always follow the instructions, safety instructions and warnings contained therein. They are important so that you can install and operate the appliance safely and properly.

1.1 Intended use

- This appliance is intended for household use and similar applications such as:
  - in staff kitchen areas in shops, offices and other work areas
  - in agriculture and by guests in hotels, motels and other accommodation
  - bed and breakfasts
  - in catering and similar wholesale operations
- Further uses:
  - This appliance is not suitable for freezing food.
  - This appliance is suitable for integrated under-counter installation.
  - All other types of application are impermissible.

1.2 Foreseeable erroneous use

The following applications are expressly prohibited:

- Storage and cooling of:
  - Chemically unstable, flammable or corrosive substances
  - Explosive substances, such as aerosol containers with flammable propellant gas
  - Medication, blood plasma, laboratory compounds or similar substances and products subject to the Medical Device Directive 2007/47/EC
- Use in explosive areas

Improper use of the appliance will result in damage or spoilage of the stored foods.

1.3 User group

- This appliance must not be used by persons (including children) with reduced physical, sensory or mental capabilities, or by persons with a lack of experience and knowledge, unless they are supervised by a person responsible for their safety or have been given instructions on how to use the appliance. Children must be supervised to ensure that they do not play with the appliance.
- Children aged between 3 and 8 are allowed to load and unload the fridge-freezer.

1.4 Warning notices – Risks for the user

- WARNING: Keep ventilation openings in the equipment housing or in installations clear of obstructions.
- WARNING: Do not use any mechanical devices or other means to speed up the defrosting process other than those recommended by the manufacturer.
- WARNING: Do not damage the coolant circuit.
- WARNING: Do not operate electrical appliances inside the refrigerator/freezer compartment that are not of the type recommended by the manufacturer.
- WARNING: When installing the appliance, ensure that the mains lead is not trapped or damaged.
- WARNING: Do not place portable multiple sockets or power supply units at the rear of the appliance.

Once the appliance has been installed, it must still be possible to disconnect it from the mains.

- Accessible mains plug (above, below or next to the appliance)
- Tripping of the fuse in the building's electrical installation in accordance with the installation regulations.

WARNING: Fire hazard/flammable substances.

The symbol is located on the compressor and may also appear in other places on the appliance. It marks the danger posed by flammable substances. Do not remove the sticker.

- The more refrigerant there is in the appliance, the larger than room must be in which it is located. In rooms that are too small, a leak can product a flammable gas/air mixture. For every 8 g of refrigerant, the installation room

must be at least 1 m^3 in size. Information on the refrigerant contained is given on the type plate inside the appliance.
- Clean regularly surfaces that can come in contact with food and accessible drainage systems.
- Package raw meat or fish in clean, closed containers. This will prevent meat or fish from touching or dripping onto other food.
- If the fridge-freezer is left empty for a long period, switch it off, defrost it, clean it, dry it and leave the door open to prevent mould from forming.
- Avoid prolonged skin contact with cold surfaces or with cold food. Use gloves for protection, for example.
- Alcoholic beverages and other containers bearing alcohol must be sealed tight for storage. Any leaking alcohol may ignite due to electrical parts.
- Only open the door for a short time. This prevents the temperature inside the appliance from rising.
- Do not reach between the door and the appliance when opening and closing. Fingers may become trapped.
- WARNING: This appliance must be secured in accordance with the instruction manual to prevent any risks arising from a lack of stability.
- Follow the instructions regarding installation, fixing, required dimensions and connections. (see 3 Setting up and connecting)

1.5 Faults, damage and repairs

- Mains connection with cooling appliance plug:
  If the mains lead of this appliance is damaged, it must be replaced with a special connection line available from the manufacturer or its customer service department. The customer may make the change.
- Repairs and interventions on the appliance may only be carried out by the customer service or by other qualified personnel trained for this purpose.
- In the event of malfunctions and appliance faults, pull out the mains plug or switch off the fuse. Always hold the plug when pulling out the mains plug. Never tug on the cable.

1.6 Information concerning disposal

The crossed-out rubbish bin symbol is a note that the appliance must not be disposed of with unsorted household waste and must be placed in a separate collection. It contains recyclable materials and may be reusable.

The symbol may be found on the compressor. It pertains to the oil in the compressor and indicates the following danger: **Can be fatal if swallowed or with penetration of the respiratory tract.** This information is only significant for recycling. No risk exists with normal use.

This or a similar sticker may be on the rear of the appliance. It indicates that there are vacuum insulation panels (VIP) or perlite panels in the door and/or housing. This information is only significant for recycling. Do not remove the sticker.

- The old appliance must be properly and therefore professionally disposed of in accordance with the local applicable regulations and legislation. When transporting the old appliance do not damage the refrigerant circuit, so that the refrigerant inside (information on the type plate) and the oil do not leak out uncontrolled.
- Please note that it is the customer's responsibility to delete any personal data that may be held.
- For Germany: The appliance can be disposed of free of charge via the class 1 collection containers at the local recycling/reusable material centres. When purchasing a new refrigerator/freezer and a sales area > 400 m^2, the old appliance is also taken back free of charge via the trade.
- EU: Please check with your local authorities to find out how to dispose of old appliances.

1.7 Conformity

The coolant circuit has been tested for leak-tightness. When installed, the appliance complies with the relevant safety regulations and directives.

For the EU market:	The appliance complies with Directive 2014/53/EU.
For GB market:	The appliance complies with the Radio Equipment Regulations 2017 SI 2017 No. 1206.

The full text of the EU Declaration of Conformity is available at the following web address: www.liebherr.com

1.8 Climate classes

Depending on its climate class, the appliance is designed for operation within certain ambient temperature limits. The climate class for your appliance is printed on the type plate.

Note

▶ In order to guarantee fault-free operation comply with the specified ambient temperatures.

Climate class	for ambient temperatures from
SN	10 °C to 32 °C
N	16 °C to 32 °C
ST	16 °C to 38 °C
T	16 °C to 43 °C
SN-ST	10 °C to 38 °C
SN-T	10 °C to 43 °C

1.9 SVHC substances in accordance with the REACH Regulation

- You can use the following link to check whether your appliance contains SVHC substances in accordance with the REACH Regulation:
  https://go.liebherr.com/z3eewm

1.10 EPREL database

- From 1 March 2021, the information on energy labelling and eco-design requirements will be available in the European product database (EPREL). The product database can be accessed via the following link https://eprel.ec.europa.eu/. Here, you are asked to enter the model identifier. You will find the model identifier on the type plate.

1.11 Open source licences

- The appliance contains software components that use open source licences. Information on the open source licences used can be found here:

home.liebherr.com/open-source-licences

1.12 Spare parts

- The spare parts availability for functional parts and stockable parts of the equipment is 15 years.

1.13 Warning levels

DANGER	Identifies an immediately dangerous situation that will result in death or serious bodily injuries if it is not prevented.
WARNING	Identifies a dangerous situation that could result in death or serious bodily injury if it is not prevented.
CAUTION	Identifies an immediately dangerous situation that could result in slight or moderate injuries if it is not prevented.
ATTENTION	Identifies a hazardous situation that could result in property damage if it is not prevented.
Note	Identifies useful information and tips.

2 Appliance at a glance

2.1 Scope of delivery

Check all parts for transport damage. Contact your dealer or customer service in the event of complaints. (see 11.4 Customer Service)

Your new appliance comes with the following parts:

- Built-in appliance
- Features (depending on the model)
- Installation materials (depending on the model)
- “Quick Start Guide”
- “Installation Guide”*
- Service Brochure

2.2 Overview of the appliance and equipment

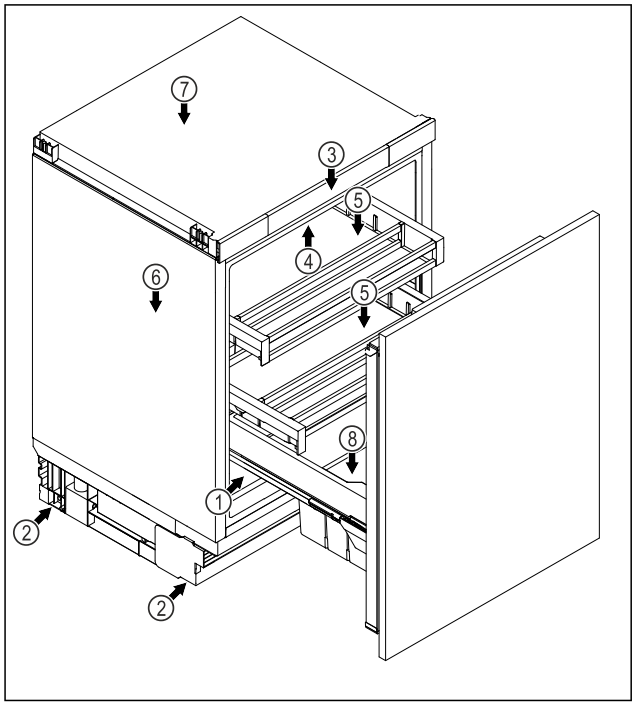

Fig. 1 Example illustration, front end

Equipment

(1)	Type plate	**(5)**	Drawer
(2)	Adjustable foot	**(6)**	Defrost water drain
(3)	Controls and temperature display	**(7)**	Fan with FreshAir activated charcoal filter
(4)	Interior lighting	**(8)**	Telescopic unit with drinks compartment

2.3 SmartDevice

SmartDevice is the networking solution for your refrigerator.

If your appliance SmartDevice-enabled or compatible, you can quickly and easily connect your appliance to your WiFi. With the SmartDevice app, you can operate your appliance from a mobile device. Additional functions and setting options are available in the SmartDevice SmartDevice app.

SmartDevice-enabled appliance:	Your appliance is capable of being a SmartDevice. To be able to connect your device to WiFi, you need to download the SmartDevice app.
More information about SmartDevice:	**smartdevice.liebherr.com**
Downloading the SmartDevice app:	After installing and configuring the SmartDevice app, you can connect your appliance to your Wi-Fi (see WiFi) using the SmartDevice app and the appliance's Wi-Fi function.

Note
The SmartDevice function is not available in the following countries: Russia, Belarus, Kazakhstan.

*** Depending on model and options**

3 Setting up and connecting

3.1 Installation requirements

The installation conditions are crucial to ensure that you can operate your appliance safely, efficiently and without problems.

- Observe all safety instructions.
- Consider the location and position in the room.

WARNING
Danger of fire due to incorrect positioning!
If the mains cable or plug touches the back of the appliance, the vibration can damage the mains cable or the plug resulting in a short circuit.

▶ Make sure the mains cable is not trapped under the appliance when you position the appliance.
▶ Stand the appliance so that it is not touched by connectors or main cables.
▶ Do not connect any appliances to sockets in the area of the back of the appliance.
▶ Do **not** place and operate multi-sockets/power distributors and other electronic devices (such as halogen transformers) at the back of the appliances.

WARNING
Fire hazard due to dampness!
If live parts or the mains lead become damp this may cause short circuits.

▶ The appliance is designed for use in enclosed areas. Do not operate the appliance outdoors or in areas where it is exposed to splash water or damp conditions.

WARNING
Risk of fire due to leaking refrigerant and oil!
The refrigerant inside the appliance is environmentally friendly, but flammable. The oil it contains is also flammable. Escaping refrigerant and oil can ignite in high concentrations and in contact with an external heat source.

▶ Do not damage the refrigerant circuit pipes or the compressor.

3.1.1 Installation site

- Only set up and use the appliance in enclosed spaces.
- Only operate the appliance when it is installed.
- If the appliance is installed in a very damp environment, condensation may form on the appliance exterior. Always make sure there is good ventilation and aeration at the installation site.
- The more refrigerant there is in the appliance, the larger than room must be in which it is located. In rooms that are too small, a leak can product a flammable gas/air mixture. For every 8 g of refrigerant, the installation room must be at least 1 m^3 in size. Information on the refrigerant contained is given on the type plate inside the appliance.
- The floor on which the appliance stands must be horizontal and level.

3.1.2 Position in space

- Do not install the appliance in direct sunlight or near radiators or similar sources of heat.
- You can install the appliance directly next to an oven.
- If the appliance is installed directly next to an oven, the energy consumption may increase slightly. This is dependent on the service life and usage intensity of the oven.
- If you install the appliance in a island unit, appliances with an integrated exhaust air system can damage the appliance. Either ensure separate air ducting or install a partition wall between the appliances.
- Use in hazardous areas is not permitted.

3.1.3 Insert under worktop

- If you are installing the appliance in a kitchen unit that is standing on uneven ground: Levelling kitchen furniture.

3.2 Appliance dimensions

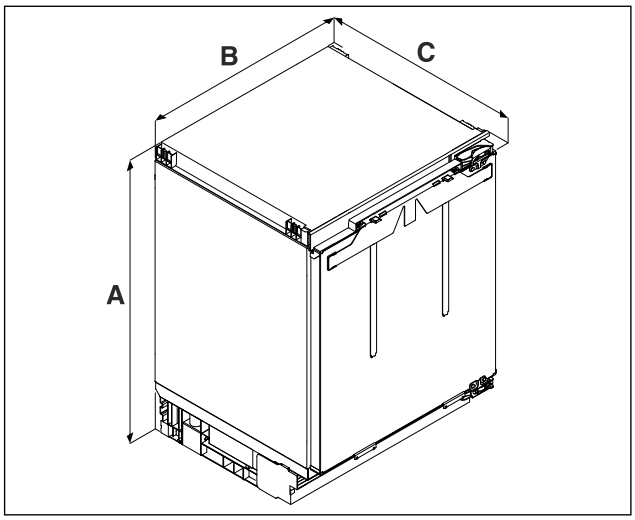

Fig. 2 Example illustration

(A) Appliance height including feet
(B) Appliance width
(C) Appliance depth

	U.. 36..[A]	U.. 37..[A]
A	819 mm	859 mm
B	597 mm	
C	556 mm	

[A] Appliance type designation

3.3 Recess dimensions

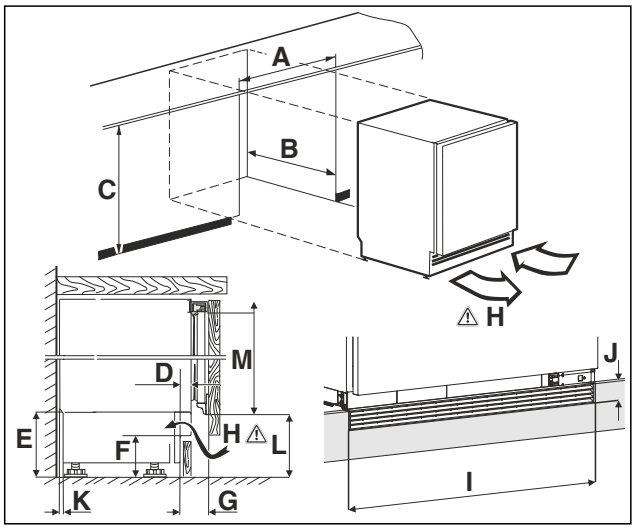

Fig. 3 Example illustration

(A) Niche width
(B) Niche depth
(C) Niche height
(H) Ventilation cross-section

A	600 mm	
B	min. 560 mm	
C	**U.. 36..:**[A] 820 mm to 880 mm	**U.. 37..:**[A] 860 mm to 920 mm
D	11 mm to 66 mm	
E	100 mm to 160 mm	
F	60 mm to 120 mm	
G	54 mm to 109 mm	
H	150 cm²	
I	600 mm	
J	40 mm	
K	18 mm	
L	**SDUFD 3603 / DURD 3600 / DuRd 3601:** 99 mm to 159 mm **SUFd 3603 / SUFNd 365i / SUFNc 365i / SUFNh 3653 / URd 3600 / URh 3600 / URD 365i / URd 3601 / URh 365i:** 104 mm to 164 mm **URPh 365i / URPd 356i / SUFNPc 365i:** 126 mm to 186 mm **SUFNc 375i / SUFc 3703 / URc 3700 / URC 375i /URC 3701 / SUBa 375i / URh 375i / URPc 375i:** 104 mm to 164 mm	
M	**SDUFD 3603 / DURD 3600 / DuRd 3601:** 752 mm **SUFd 3603 / SUFNd 365i / SUFNc 365i / SUFNh 3653 / URd 3600 / URh 3600 / URD 365i / URd 3601 / URh 365i:** 705 mm **URPh 365i / URPd 356i / SUFNPc 365i:** 680 mm **SUFNc 375i / SUFc 3703 / URc 3700 / URC 375i /URC 3701 / SUBa 375i / URh 375i / URPc 375i:** 744 mm	

[A] Appliance type designation

3.4 Unit front

3.4.1 Unit front weight

NOTICE
A heavy unit door may pose a risk of damage!
If the unit door is too heavy, damage to the hinges cannot be ruled out, which may compromise functionality.
▶ Before fitting the unit door, ensure that the unit door does not exceed the permissible weight.

Niche height	Maximum weight of the unit door
.. 36..[A]	10 kg
.. 37..[A]	10 kg

[A] Appliance type designation

3.4.2 Unit door

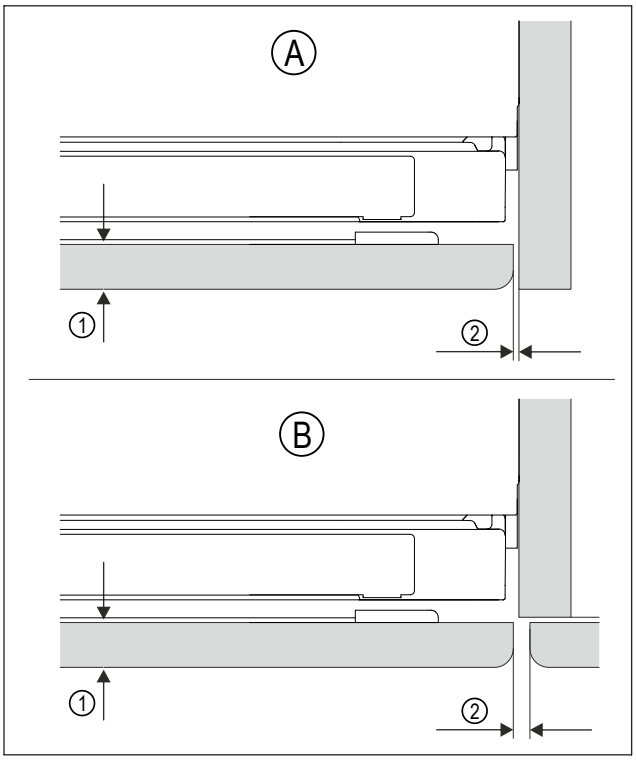

Fig. 4 Example illustration

(A) Niche with wall
(B) Niche with neighbouring furniture
(1) Front thickness
(2) Gap dimension

Front thickness	At least 16 mm
Gap dimension	At least 3 mm
The unit door must be flat and mounted without tension.	

3.4.3 Unit front dimensions

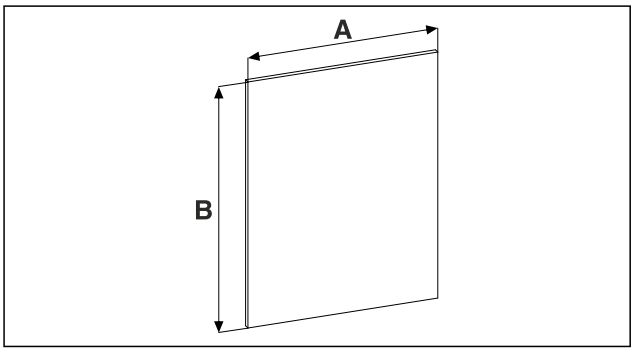

Fig. 5

Niche height	.. 36..	.. 37..
A	At least 595 mm	
B	At least 711 mm Maximum value may not be less than the ventilation cross-section of 150 cm².	At least 757 mm Maximum value may not be less than the ventilation cross-section of 150 cm².

[A] Appliance type designation

3.4.4 Decorative plate dimensions

The decorative plate is pushed into the frame that is already fitted to the support plate. The support plate is supplied with the appliance. The support plate with the decorative plate is then installed on the appliance.

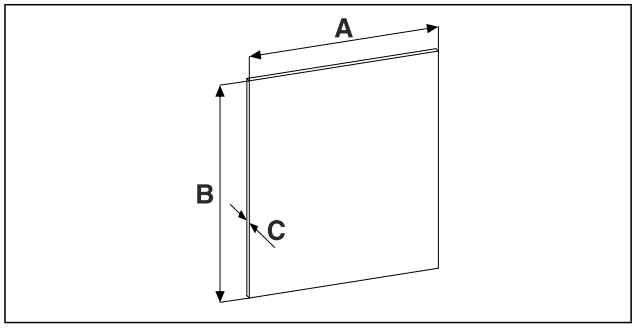

Fig. 6

Niche height	.. 36..
A	585 mm
B	678 mm
C	maximum 4 mm

A) Appliance type designation

3.5 Transporting the appliance

3.5.1 Transporting the appliance for initial use

Ensure that the following requirements are met:

- ❑ The appliance is packaged.
- ❑ The appliance is upright.

- ▶ Transport the appliance with the help of two people.
- ▶ Unpacking the appliance. (see 3.6 Unpacking the appliance)

3.5.2 Transporting the appliance after initial use

Observe the following instructions if you wish to transport or move the appliance again after initial use.

Ensure that the following requirements are met:

- ❑ The appliance is emptied.
- ❑ The appliance is upright.
- ❑ Appliance with door(s): Door is secured against accidental opening.
- ❑ Appliance with telescopic unit: The telescopic unit is secured against accidental opening.
- ❑ Appliance is removed.

- ▶ Transport the appliance with the help of two people.

3.6 Unpacking the appliance

NOTICE
Risk of damage if the unit is moved!
If you move the unit across the floor without any protection, it may damage the floor.
▶ Make sure you cover the floor properly before removing the packaging from the unit.

- ▶ Check the appliance and packaging: If you suspect that the goods have been damaged in transit, please contact the supplier before connecting them.

NOTICE
Damage to property caused by pointed or sharp objects!
Using pointed or sharp objects when removing packaging material may damage the appliance.
▶ Do not use any pointed or sharp objects to remove the packaging material.

- ▶ Remove the packaging materials.

3.7 Aligning the telescopic unit

If the telescopic unit is not straight, you can align the telescopic unit. This setting is intended exclusively for the event that the telescopic unit no longer closes properly over time. The unit is set up via the unit front.
▶ Remove the container.

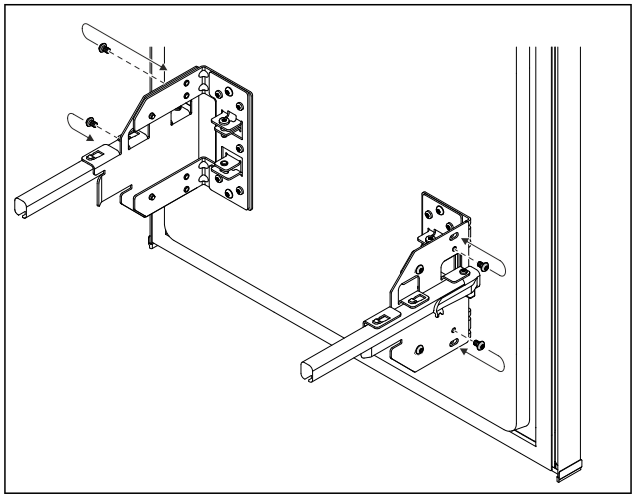

Fig. 7 Example illustration

- ▶ Relocate the screws.
- ▶ Do not screw the screws fully tight.

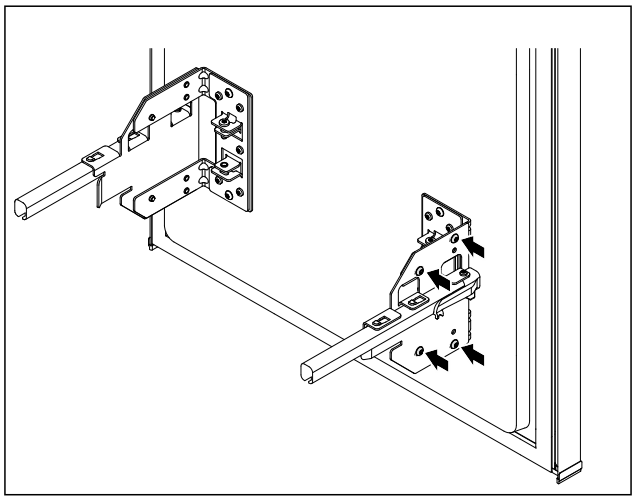

Fig. 8 Example illustration

- ▶ Loosen screws slightly.
- ▶ Move telescopic units forwards or backwards with mounting bracket.
- ▶ Tighten the screws as far as they will go.

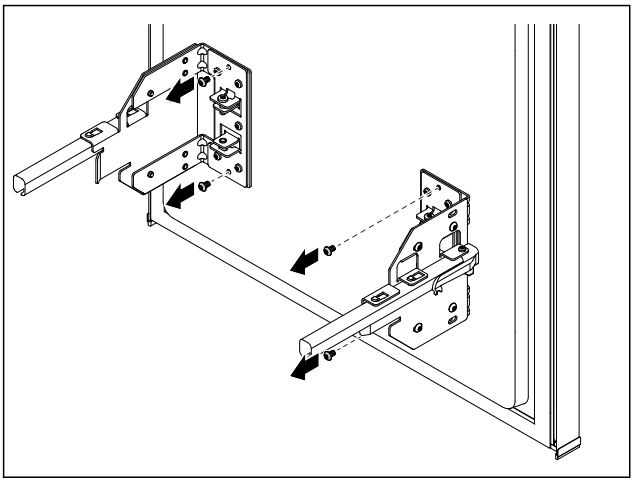

Fig. 9 Example illustration

▶ Remove the screws from the mounting bracket (screws are no longer required).

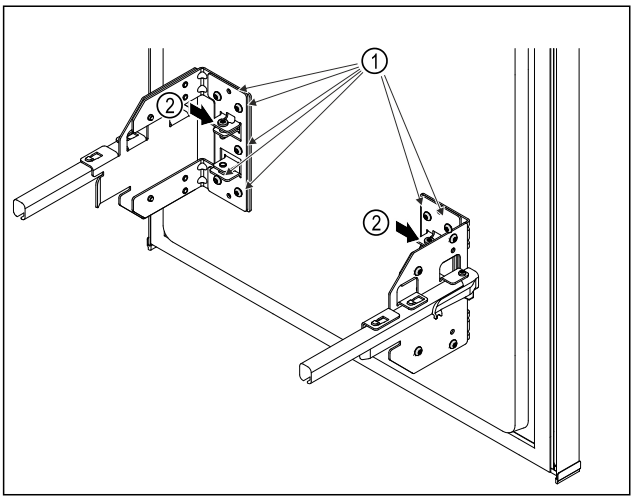

Fig. 10

▶ Loosen screws *Fig. 10 (1)* slightly.
▶ Turn the screws *Fig. 10 (2)* to move the telescopic unit up or down.
▶ Tighten the screws *Fig. 10 (1)* as far as they will go.
▷ The telescopic unit is aligned.

3.8 Installing the appliance in the niche

The appliance is installed in the niche per these main steps:

- (see 3.8.1 Provide tools)
- (see 3.8.2 Check the contents of the delivery)
- (see 3.8.3 Preparing the appliance)
- (see 3.8.4 Determine the installation position)
- (see 3.8.5 Preparing the mains connection)
- (see 3.8.6 Preparing the appliance)
- (see 3.8.7 Aligning the appliance)
- (see 3.8.8 Screwing the appliance into the niche)
- (see 3.8.9 Fitting the ventilation grille)

3.8.1 Provide tools

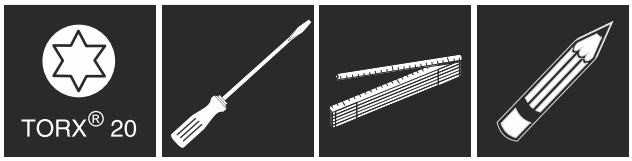

3.8.2 Check the contents of the delivery

1x	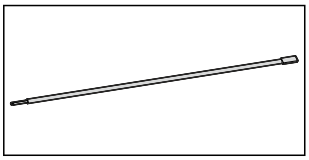
1x	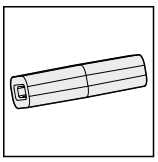
2x	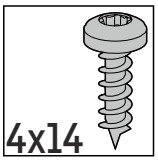
2x	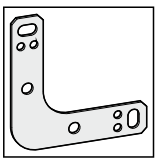
2x	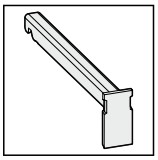

3.8.3 Preparing the appliance

Before installing the appliance in a niche, make sure that the following requirements are met:

❑ The appliance is at the installation site.

3.8.4 Determine the installation position

Before installing the appliance in the niche, you must decide on the fixing method. There are two fixing options: side fixing and top fixing. A combination of side fixing and top fixing is possible.

Lateral fixing	Ceiling mounting
Substructure under a hard worktop such as granite	No granite slab
The appliance is lower than the worktop when the adjustable feet are fully extended.	Appliance sits slightly braced under worktop when adjustable feet are fully extended.
Appliance side panel available for screwing.	

3.8.4 Preparing the mounting bracket for top mounting

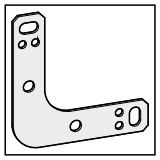

Fig. 11 Scope of delivery

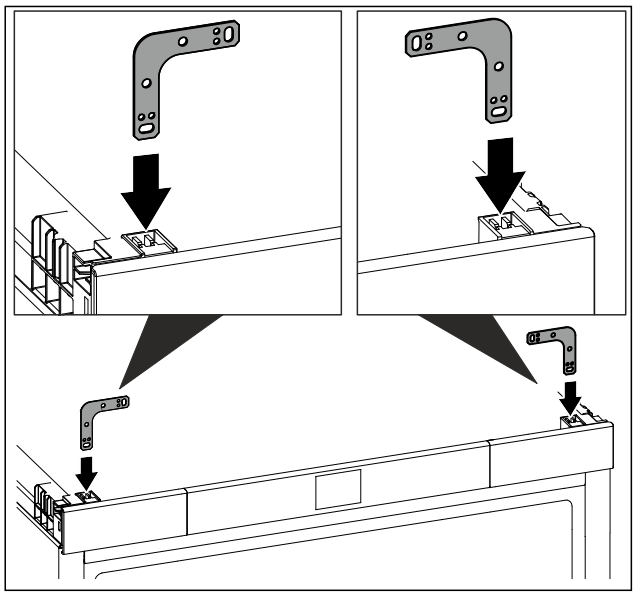

Fig. 12

▶ Insert the bracket into the mounting opening in the top of the appliance.

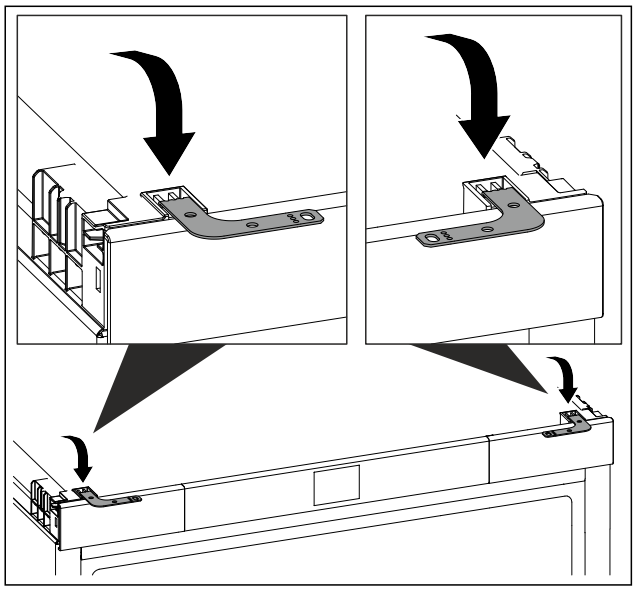

Fig. 13

▶ Bend the bracket forwards.

▷ Bracket remains on the appliance.

3.8.4 Preparing the mounting bracket for side mounting

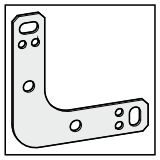

Fig. 14 Scope of delivery

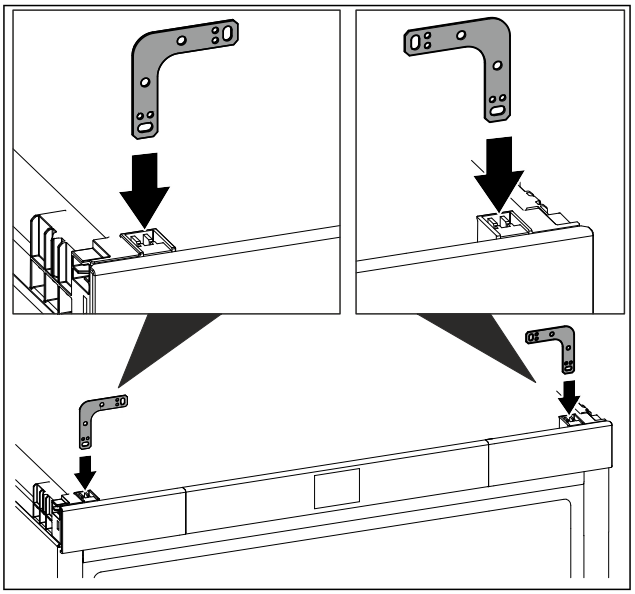

Fig. 15

▶ Insert the bracket into the mounting opening in the top of the appliance.

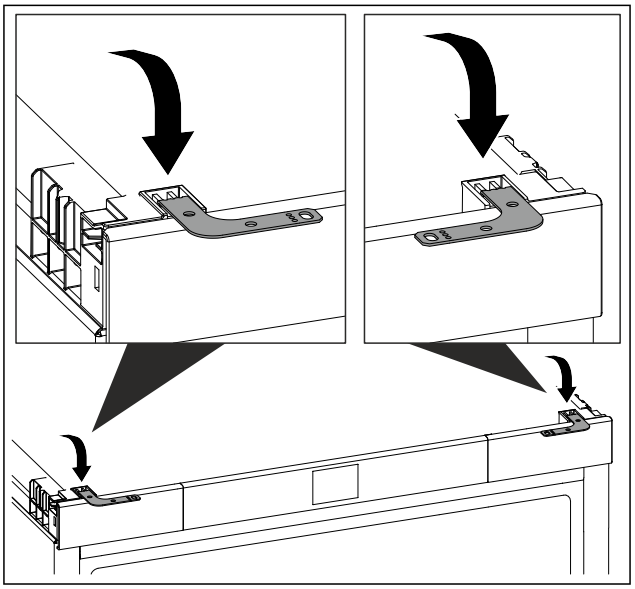

Fig. 16

▶ Bend the bracket forwards.

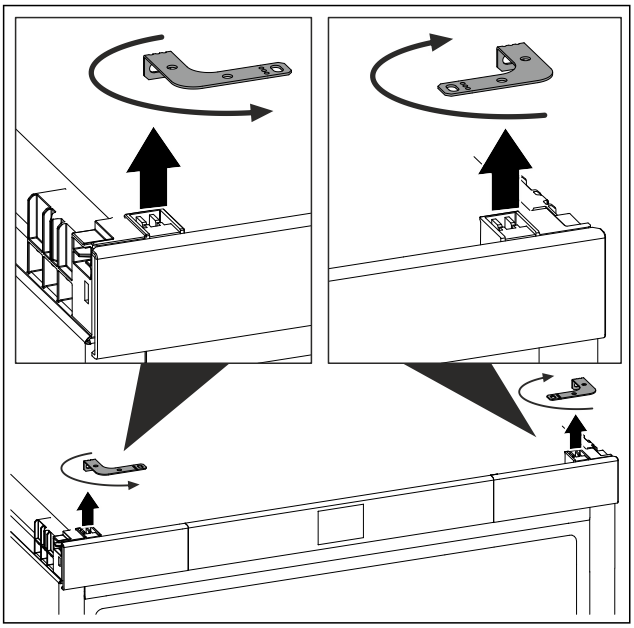

Fig. 17

▶ Pull out the bracket.
▶ Rotate the bracket in the direction of the arrow.

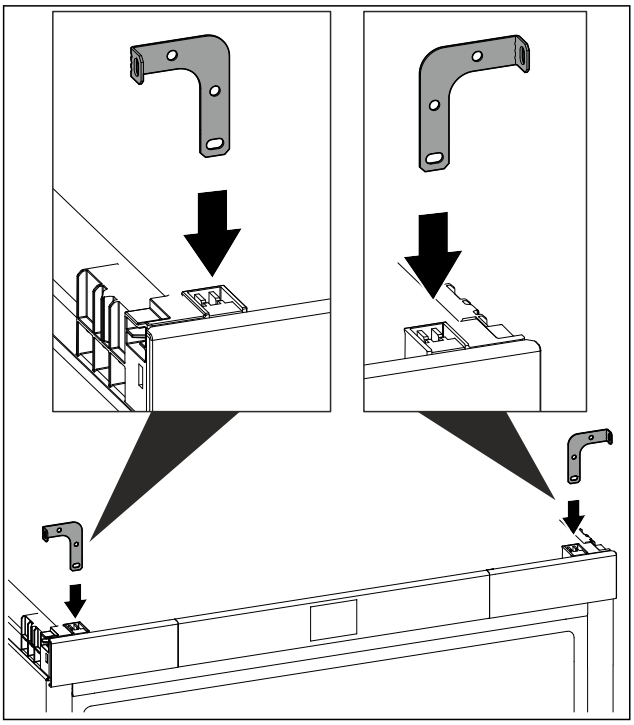

Fig. 18

▶ Insert the bracket with the straight end first.

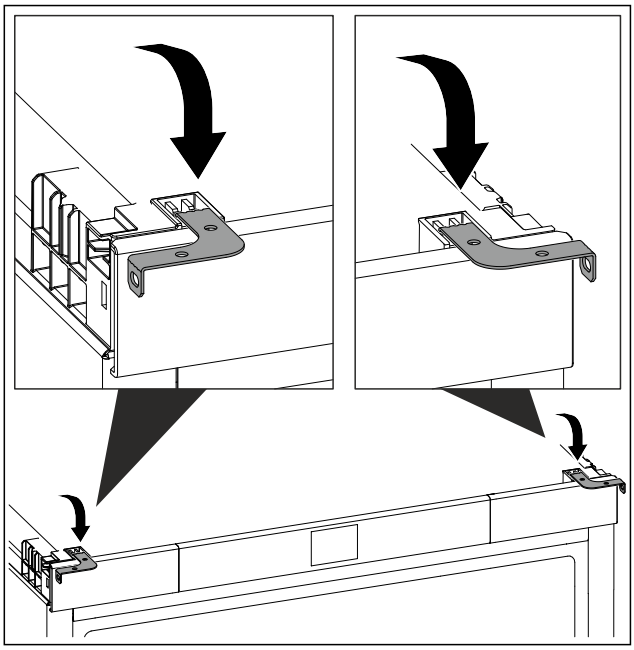

Fig. 19

▶ Bend the bracket forwards.
▷ Bracket remains on the appliance.

3.8.5 Preparing the mains connection

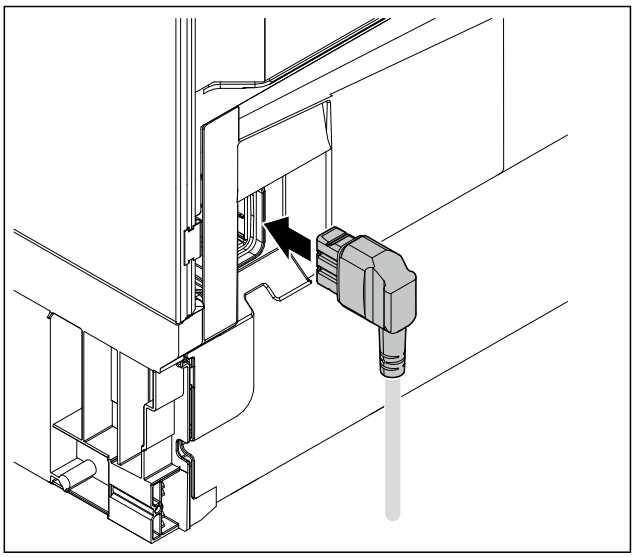

Fig. 20 Example illustration

▶ Plug the mains cable's IEC socket completely into the appliance plug on the back of the appliance.
▶ Ensure that the IEC socket is tight.
▶ Use a cord to lay the mains plug to a freely accessible socket.

3.8.6 Preparing the appliance

NOTICE
Risk of damage if the appliance is moved!
If you move the appliance, you may damage the floor or the appliance's adjustable feet may break off.
Before moving:
▶ Screw in the levelling feet completely.
▶ Place a cardboard strip (e.g. packaging) with approx. 100 mm x 600 mm under each of the adjustable feet.
When moving:
▶ Move the appliance carefully.
▶ For uneven floors: Carefully lift the appliance.
After moving:
▶ Remove the cardboard strips.

WARNING
Risk of fire due to short circuit!
- ▶ When you push the appliance into the niche: do not kink, jam or damage the mains cable.
- ▶ The appliance must not be operated with a defective mains cable.

▶ Slide the appliance into the niche.

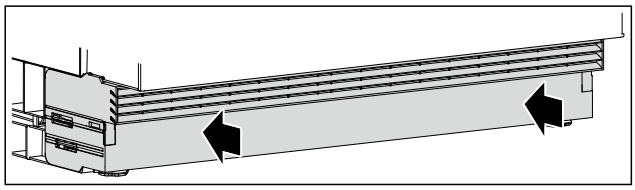

Fig. 21 Example illustration

▶ Push the ventilation grille all the way to the back.

3.8.7 Aligning the appliance

3.8.7 Aligning the appliance with regard to its height

Ensure that the following prerequisites are met:

- ❑ The floor where the unit is located must be horizontal and level.
- ❑ The niche is aligned horizontally and vertically.

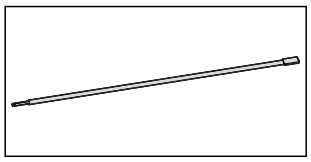

Fig. 22 Scope of delivery

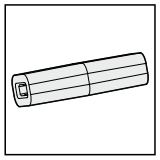

Fig. 23 Scope of delivery

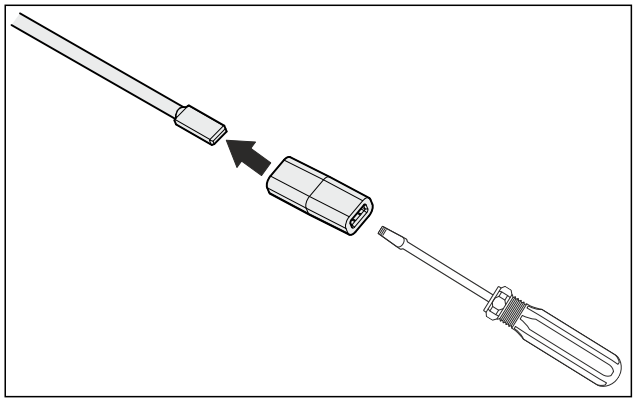

Fig. 24

▶ Height adjustment at the rear: Connect the rod to the adapter piece.

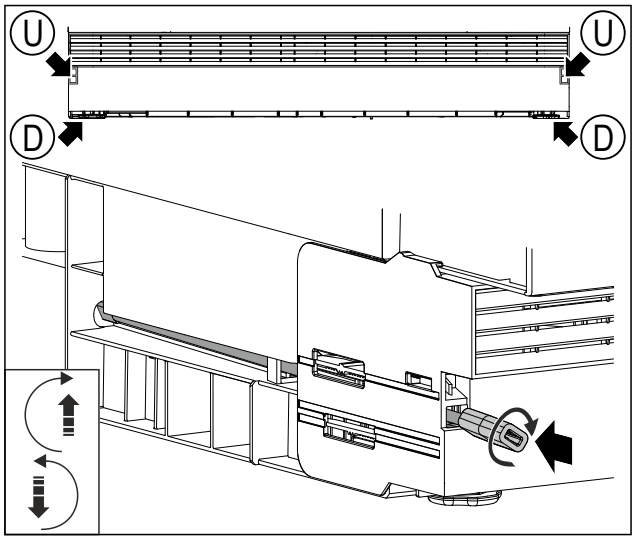

Fig. 25 Example illustration

(U) Rear height adjustment
(D) Front height adjustment

▶ Insert the rod with the adapter piece into the opening *Fig. 25 (U)*.
▶ Turn the rod with the adapter piece.
▶ Raise the unit using the adjustable feet on each side until it is just below the worktop.
▷ Unit can be adjusted in height by maximum 60 mm.

3.8.7 Aligning the appliance with regard to its depth

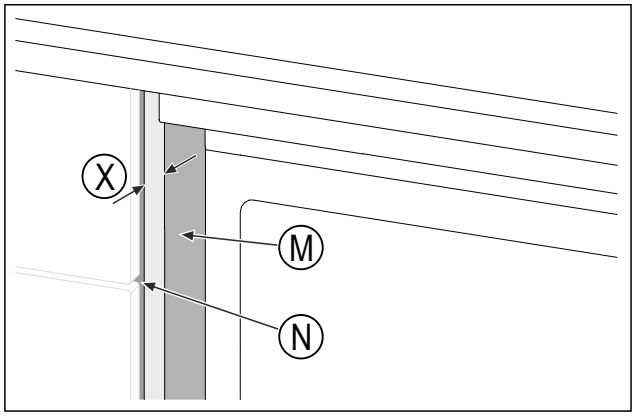

Fig. 26 Example illustration

(M) Appliance body
(N) Front of niche

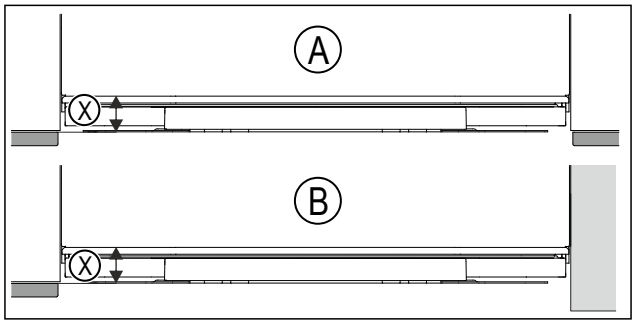

Fig. 27 Example installation situation

(A) Niche with neighbouring furniture
(X) Distance between body of appliance and front of niche
(B) Niche with wall

▶ Check that the distance (X) corresponds to installation situation (A) or (B).

(X)	41.5 mm

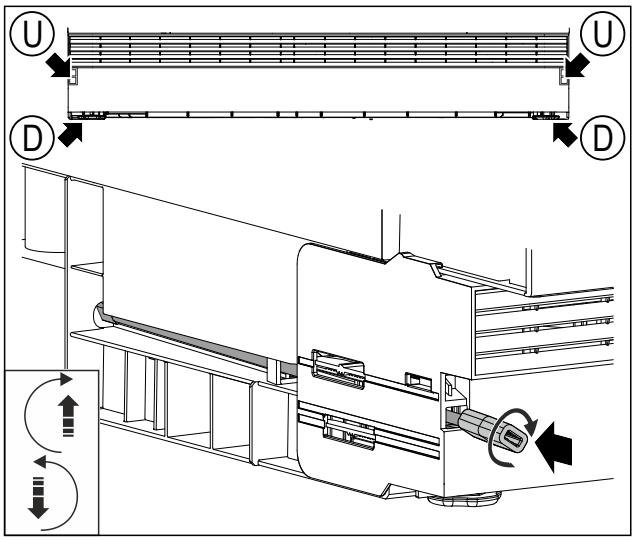

Fig. 28 Example illustration

(U) Rear height adjustment **(D)** Front height adjustment

▶ Unscrew the adjustable feet on each side as far as they will go.
▶ Keep the rod with adapter piece to remove the appliance.
▷ Appliance is aligned upright.
▷ The appliance is slightly braced in the recess between the floor and worktop.

3.8.8 Screwing the appliance into the niche

3.8.8 Ceiling mounting

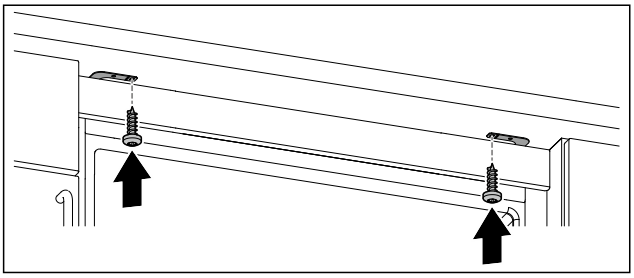

Fig. 29 Example illustration

▶ Screw the mounting brackets into place beneath the worktop using two screws each.

3.8.8 Lateral fixing

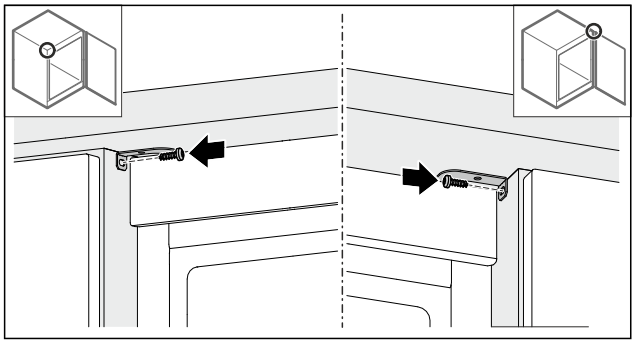

Fig. 30 Example illustration

▶ Screw the mounting brackets into place in the niche using one screw on the right and one on the left.

3.8.9 Fitting the ventilation grille

Ventilation grille visible: The ventilation grille is visible along its entire height.

Ventilation grille concealed: Only the ventilation slots are visible. The lower section is concealed by the plinth panel. The ventilation slots must remain unobstructed.

3.8.9 Aligning the visible ventilation grille

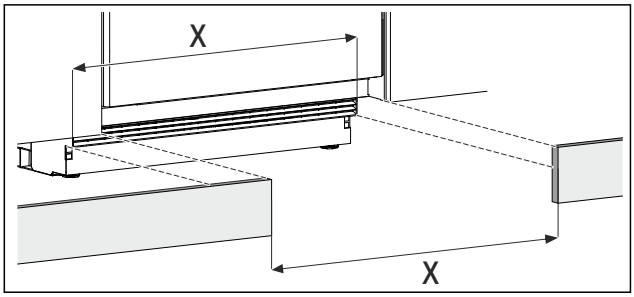

Fig. 31 Example illustration

▶ Measure unit base cut-out.

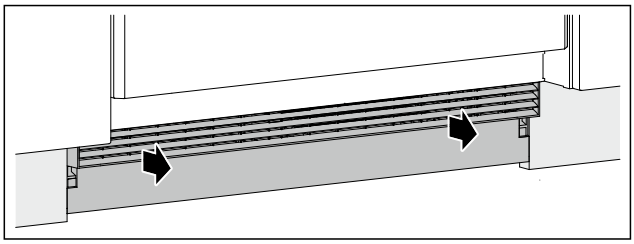

Fig. 32 Example illustration

▶ Position the plinth panel.
▶ Pull the ventilation grille forwards until the ventilation grille and the plinth panel are flush.
▷ Ventilation slots are completely free.

3.8.9 Aligning the ventilation grille so that it is concealed

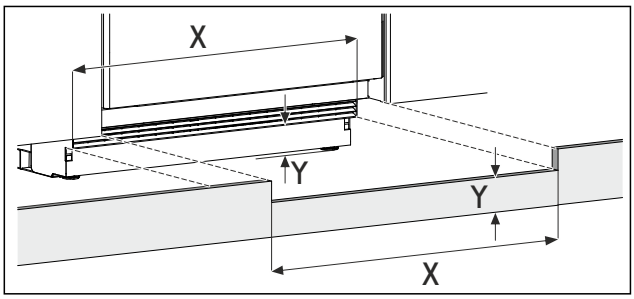

Fig. 33 Example illustration

▶ Measure unit base cut-out.
▶ Ensure that the ventilation slots are completely free: Cut out the X/Y section in the plinth panel.

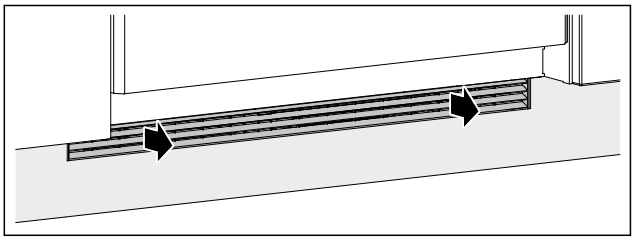

Fig. 34 Example illustration

▶ Position the plinth panel to test the fit.
▶ Pull the ventilation grille forwards until it is flush with the plinth panel.
▶ Remove the plinth panel.
▷ Ventilation slots are completely free.

3.8.9 Secure the ventilation grille

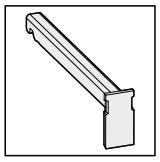

Fig. 35 Scope of delivery

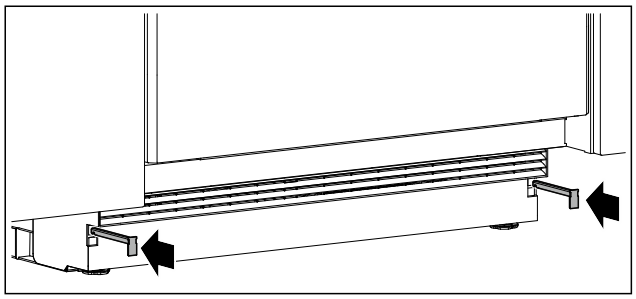

Fig. 36 Example illustration

▶ Insert the latch, holding the ventilation grille in place to prevent it from moving accidentally.
▷ Fit the unit fronts. (see 3.9 Fitting the unit door)
▷ (see 3.11 Connecting the appliance to the power supply)

3.9 Fitting the unit door

Tool

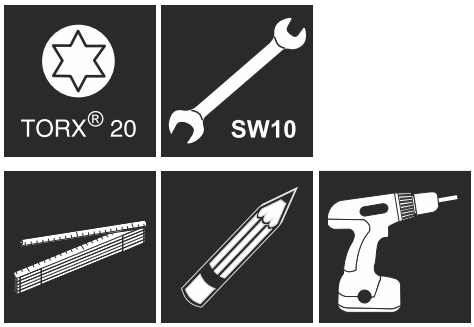

Scope of supply

1x	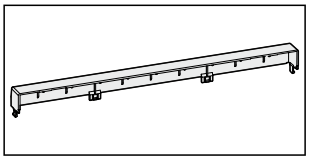
6x	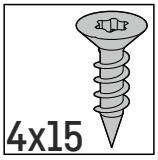
4x	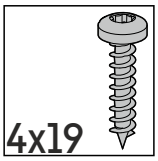

▶ Fit the handle to the unit door.

Note
To ensure that the pull-out trolley is pulled out evenly:
▶ Always fit the unit door handle in the centre of the unit door.

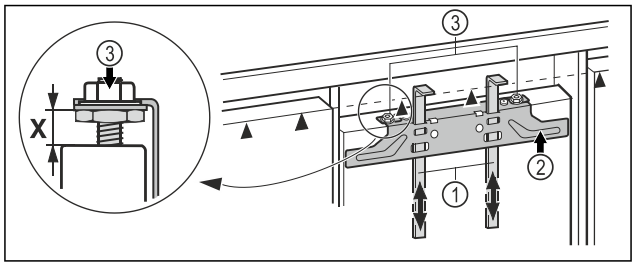

Fig. 37

▶ Check the default setting of **X = 8 mm**. (Distance between appliance door and lower edge of traverse)
▶ Push the assembly aids *Fig. 37 (1)* up to unit door height. Lower stop edge ▲ of the assembly aid = upper edge of the unit door to be assembled.
▶ Unscrew the fastening bar *Fig. 37 (2)* using the lock nuts *Fig. 37 (3)*.

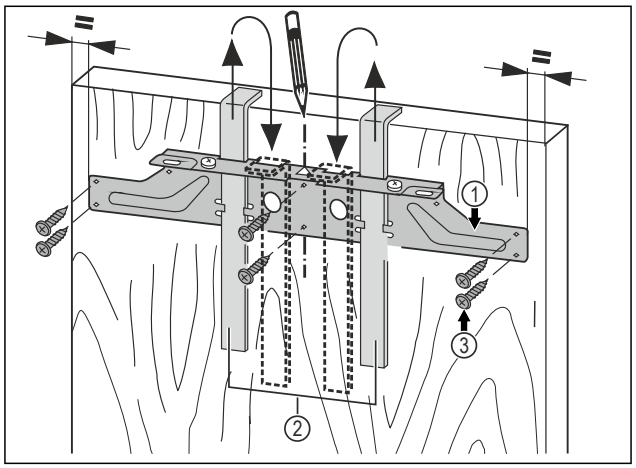

Fig. 38

▶ Hang the fastening bar *Fig. 38 (1)* with the mounting aids on the inside of the unit door *Fig. 38 (2)*.
▶ Align the fastening bar *Fig. 38 (1)* in the centre of the door.
▷ The distances to the outer edge are the same on the left and right.
For chipboard doors:
▶ Tighten the mounting bar *Fig. 38 (1)* with at least 6 screws *Fig. 38 (3)*.
For panelled doors:
▶ Screw the mounting bar *Fig. 38 (1)*to the edge with 4 screws *Fig. 38 (3)*.
▶ Pull the assembly devices *Fig. 38 (2)* upwards and push them, at an angle, into the receiving openings.

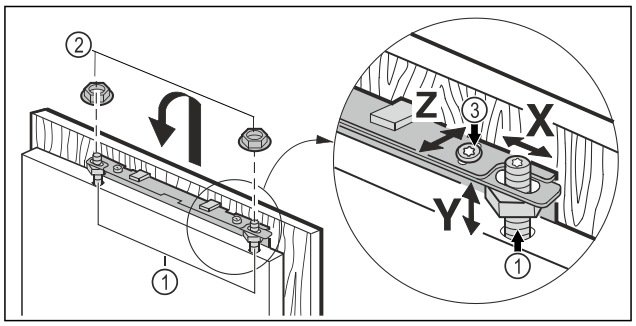

Fig. 39

▶ Hook the unit door onto the adjustment bolts *Fig. 39 (1)* and screw the lock nuts *Fig. 39 (2)* loosely onto the adjustment bolts.
▶ Close the door.
▶ Check the distance of the door against the surrounding unit doors.
▶ Align the unit door sideways: Move unit door in **X** direction.

▶ Align the unit door in height **Y** and in the lateral inclination: Adjust the adjustment bolt *Fig. 39 (1)* with a screwdriver.
▷ The unit door is aligned flush with the surrounding unit doors.
▶ Tighten the lock nuts *Fig. 39 (3)*.

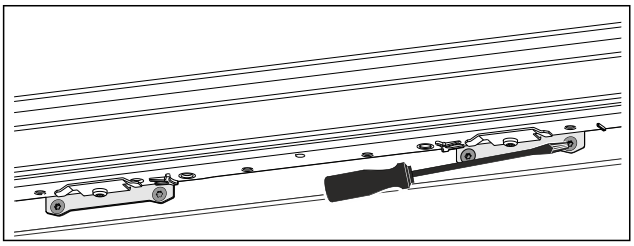

Fig. 40

▶ Screw the unit door to the appliance door.
▶ Pre-drill the fastening holes in the unit door (if necessary, pre-pierce with a graver).
▶ Screw the appliance door to the unit door using screws through the mounting brackets.

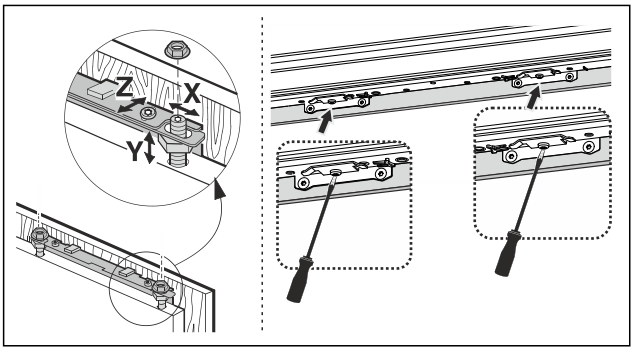

Fig. 41

▶ Align the unit door at depth **Z**: loosen the screws at the top and bottom of the door, then move the door.
▶ Do not allow any burls or sealing lips to touch - this is important for correct function!
▶ Allow an air gap of 2 mm between the unit door and the cabiner carcass.

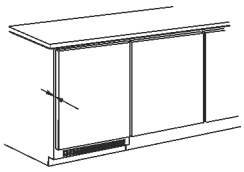

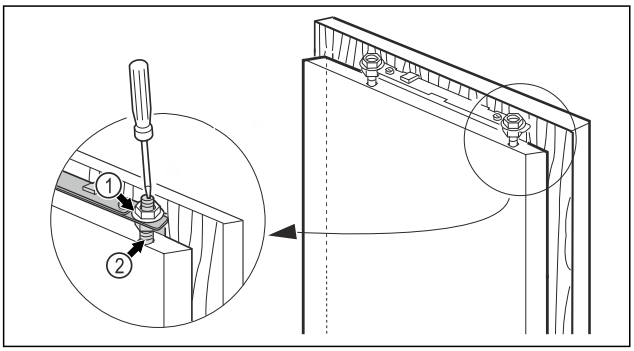

Fig. 42

▶ Check the fit of the door and readjust if necessary.
▶ Tighten all screws.
▶ Tighten the lock nuts *Fig. 42 (1)* with a hexagon spanner 13, stabilising the adjusting bolt *Fig. 42 (2)* with a screwdriver.

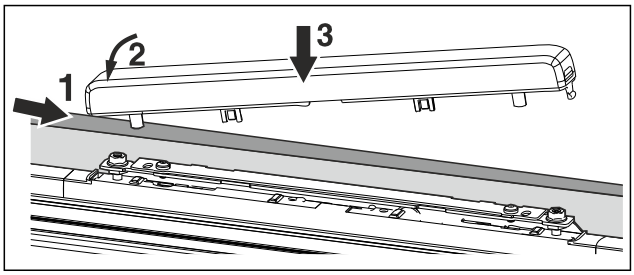

Fig. 43

▶ Position the upper cover and engage it.

3.10 After installation

▶ Remove all transport safety fittings from the interior.

NOTICE
Damage to property caused by pointed or sharp objects!
Using pointed or sharp objects when removing packaging material may damage the appliance.
▶ Do not use any pointed or sharp objects to remove the packaging material.

▶ Remove protective films from the interior: Peel the film off flat along the surface of the component to minimise its adhesive force.
▶ Clean the appliance. (see 10.4 Cleaning the appliance)
▶ Note down the type (model, number), appliance name, appliance/serial number, date of purchase and retailer's address.

3.11 Connecting the appliance to the power supply

WARNING
Danger of electric shock and injury due to damaged appliance or damaged mains cable!
Danger of cuts and fatal injuries. If the appliance or the mains cable is damaged during transport, you may be electrocuted. You could also cut yourself on damaged parts of the appliance housing.
▶ Check the appliance and the mains cable for damage after transport.
▶ Never put the appliance into operation if the appliance or the mains cable are damaged.
▶ Contact Customer Service.

You can connect your appliance to the mains using the power cable supplied separately. The mains power cable has an appliance coupler at one end and a mains plug at the other end.

Make sure that the following requirements are fulfilled:

- The appliance and power cable are undamaged.
- The appliance is installed in accordance with the regulations. (see 3.8 Installing the appliance in the niche)
- Requirements for the electrical connection are met.
- Dimensions for connection in accordance with regulations are known and observed.
- Mains voltage and frequency correspond to the specifications on the type plate.
- The socket is earthed according to the regulations and fused.
- The fuse tripping current is between 10 A and 16 A.

NOTICE
Danger of damage to incorrect operation!
Damage to the electrical components of the appliance.
▶ Only use the supplied mains cable.

WARNING
Danger of fire due to incorrect connection!
Burns.
Damage to the appliance.
▶ Do not use an extension cable.
▶ Do not use distributor blocks.

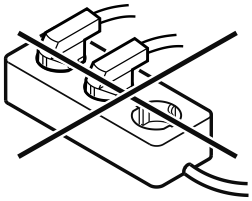

NOTICE
Danger of damage to incorrect connection!
Damage to the appliance.
▶ Do not connect the appliance to a stand-alone inverter, e.g. solar power systems and petrol generators.

▶ Connect the mains cable plug to the power supply. Ensure that the plug is tightly in the socket.
▷ The Liebherr logo appears in the display.
▷ The display switches to the standby symbol.
▷ If no action occurs within 60 seconds: The standby symbol fades or disappears.
▷ The appliance is connected. For information regarding first use, see the following section or the operating instructions.

3.12 Disposing of packaging

WARNING
Danger of suffocation due to packing material and plastic film!
▶ Do not allow children to play with packing material.

The packaging is made of recyclable materials:
- corrugated board/cardboard
- expanded polystyrene parts
- polythene bags and sheets
- polypropylene straps
- nailed wooden frame with polyethylene panel*

▶ Take the packaging material to an official collecting point.

4 Functionality of the Touch & Swipe display

You operate your appliance using the Touch & Swipe display. You select appliance functions in the Touch & Swipe display (hereafter referred to as display) by tapping them. If you do not perform any action on the display for 10 seconds, the display either jumps back to the higher-level menu or directly to the status display.

4.1 Navigation and symbol explanation

In the illustrations, different symbols are used to navigate the display. The following table describes these symbols.

Symbol	Description
	Briefly touch the display: Activates/deactivates function. Confirms selection. Opens submenu.
	Touch the display for a specified time (e.g. 3 seconds): Activates/deactivates function or value.
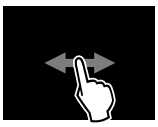	**Swipe left or right:** Navigate in the menu.
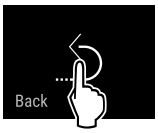	**Briefly touch the Back symbol:** Jumps back one menu level.
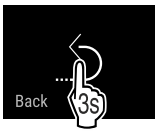	**Press and hold the Back symbol for 3 seconds:** Jumps back to the status display.
	Arrow with clock: It takes more than 10 seconds for the following message to appear in the display.
	Arrow with a time indication: It takes the specified amount of time until the following message appears in the display.
	"Open Settings menu" symbol: Navigates to the Settings menu and opens the settings menu. If necessary: Navigate to the desired function in the Settings menu. (see 4.2.1 Opening the Settings menu)
	"Open Advanced menu" symbol: Navigates to the Advanced menu and opens the advanced menu. If necessary: Navigate to the desired function in the Advanced menu. (see 4.2.2 Opening the expanded menu)
No action for 10 seconds	If you do not perform any action on the display for 10 seconds, the display either jumps back to the higher-level menu or directly to the status display.
Close the door and open it again.	If you close the door and immediately open it again, the display jumps directly back to the status display.

Note: Illustrations of the display are shown in the English version.

4.2 Menus

The appliance functions are distributed over various menus:

*** Depending on model and options**

Menu	Description
Main menu	When you switch the appliance on, you are automatically in the main menu. From here you can navigate to the most important appliance functions, to the Settings menu and to the Advanced menu.
Settings Settings menu	The Settings menu contains additional appliance functions for setting up your appliance.
Advanced menu	The advanced menu contains special appliance functions for setting up your appliance. Access to the Advanced menu is protected by the numerical code **1 5 1**.

4.2.1 Opening the Settings menu

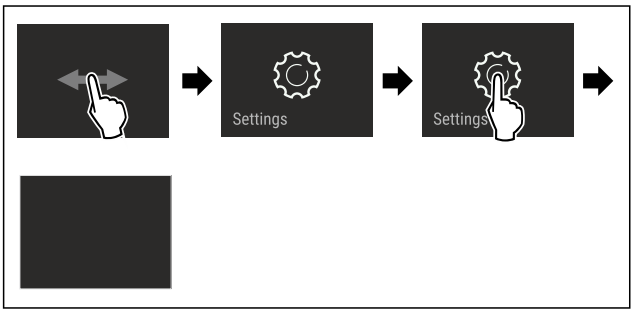

Fig. 44 Example illustration

▶ Carry out action steps according to the illustration.
▷ Settings menu is open.
▶ If necessary: Navigate to the desired function.

4.2.2 Opening the expanded menu

Fig. 45

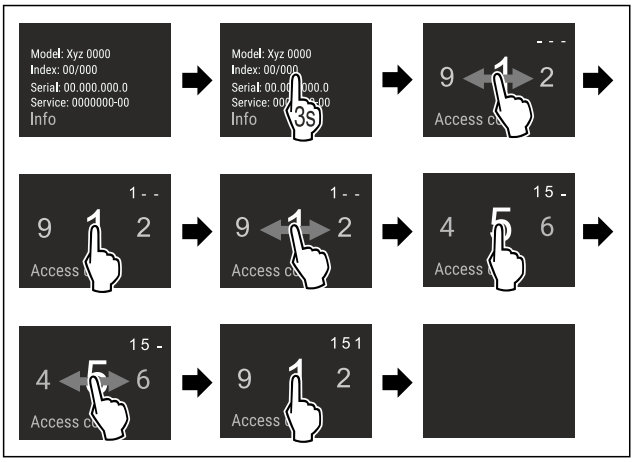

*Fig. 46 Example illustration, access with numerical code **151***

▶ Carry out action steps according to the illustration.
▷ The expanded menu is open.
▶ If necessary: Navigate to the desired function.

4.3 Sleep mode

If you do not touch the display for 1 minute, the display switches to sleep mode. In sleep mode, the display brightness is dimmed.

4.3.1 Ending sleep mode

▶ Touch the display briefly with your finger.
▷ Sleep mode is ended.

5 Putting into operation

5.1 Switching on appliance (first use)

Make sure that the following requirements are fulfilled:

- ❑ The appliance is properly installed and connected according to the installation instructions.
- ❑ All adhesive strips, adhesive and protective films and transport locks are removed from inside and on the appliance.
- ❑ All marketing leaflets are removed from the drawers.
- ❑ You are familiar with the functionality of the Touch & Swipe display. (see 4 Functionality of the Touch & Swipe display)

Switch on the appliance using the Touch & Swipe display:

▶ If the display is in sleep mode: Briefly touch the display.
▶ Carry out action steps according to the illustration.

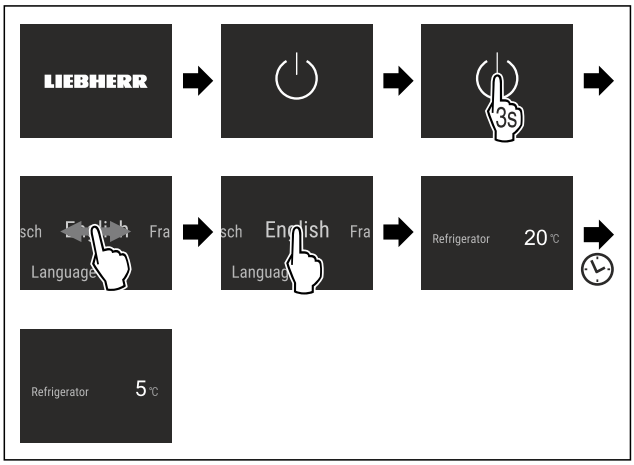

Fig. 47 Example illustration

▷ Status display appears.
▷ The appliance cools to the temperature set at the factory.
▷ The appliance starts in demo mode (status display with DEMO appears): If the appliance starts in demo mode, you can deactivate demo mode within the next 5 minutes. (see Demo mode)

More information:

- Start the SmartDevice for the first time. (see 2.3 SmartDevice) and (see WiFi)

Note
The manufacturer recommends:
▶ Stock with food: Wait for around 6 hours until the set temperature is reached.
▶ Observe the notes on storing food. (see 6.1 Information regarding storage)

Note
Accessories can be purchased from the Liebherr-Hausgeräte store at go.liebherr.com/47wtc4.

6 Storage

6.1 Information regarding storage

WARNING
Fire hazard from electrical appliances!
If you use electrical appliances in the food area of your appliance, they can cause a fire.
▶ Do not use electrical appliances in the food area of the appliance unless recommended by the manufacturer.

Note
The energy consumption increases and the cooling power goes down if ventilation is not sufficient.
▶ Always keep air slots clear.

Observe the following specifications for storage:

- Package or cover foods that readily take on or give off odours or taste in closed containers.
- Keep liquids in closed containers.
- Leave space between goods to ensure good air circulation.
- Store food according to the instructions on the packaging.
- Always observe the best-before date indicated on the packaging.

Note
Failure to follow these guidelines can lead to foodstuffs spoiling.

6.2 Fridge section with telescopic unit

6.2.1 Arranging your food properly

NOTICE
Risk of damage due to incorrectly stored food!
Damage to the fan. If you fill the top drawer too high, the drawer may hit the appliance's fan when you close the telescopic unit.
▶ Only fill the top drawer up to the top drawer rail.

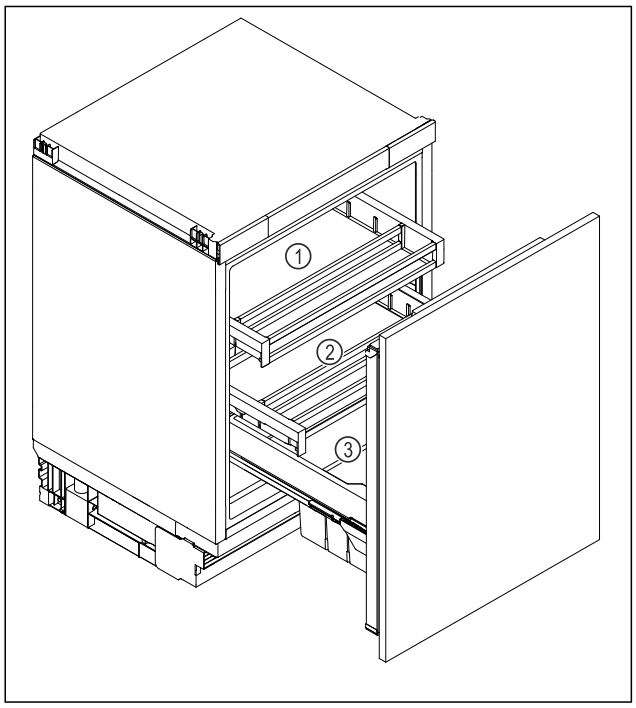

Fig. 48 Example illustration

▶ Top drawer *Fig. 48 (1)*: Store butter, cheese, tinned food and tubes.
▶ Bottom drawer *Fig. 48 (2)*: Store particularly perishable foods such as ready meals, fish, meat and sausage products.
▶ Fruit and vegetable box *Fig. 48 (3)*: Store packaged fruit and vegetables.
▶ Drinks compartment *Fig. 48 (3)*: Store individual bottles.

6.3 Storage times

Refer to the specified storage times as a guide.

In the case of foods with a minimum shelf life, the date indicated on the packaging still applies.

6.3.1 Fridge section

Always follow the best-before date stated on the packaging.

7 Saving energy

- Pay attention to good ventilation. Do not cover ventilation holes or grids.
- Do not install the appliance in direct sunlight or near radiators or similar sources of heat.
- If the appliance is installed directly next to an oven, the energy consumption may increase slightly. This is dependent on the service life and usage intensity of the oven.
- Energy consumption depends on the installation conditions, e.g. the ambient temperature . A warmer ambient temperature can increase the energy consumption.
- Open the appliance for as short a time as possible.
- The lower the temperature is set the higher the energy consumption.
- Only take food out for as long as necessary so that it doesn't warm up too much.
- Inserting warm food: allow to cool down to room temperature first.
- For longer periods of absence, use HolidayMode (see HolidayMode) .

8 Controls

8.1 Controls and displays

8.1.1 Status display

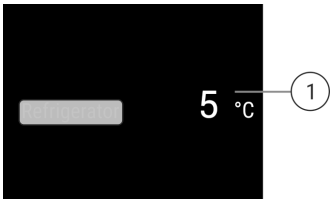

Fig. 49 The status display shows the actual temperature.
(1) Temperature display of the fridge section

8.1.2 Display symbols

Display symbols provide information on the current appliance status:

Symbol	Appliance status
	Standby The appliance or temperature zone is switched off.
	Flashing number Appliance is working. Temperature flashes until the set temperature is reached.
	Flashing symbol Appliance is working. Setting is made.

8.2 Appliance functions

8.2.1 Notes on the appliance functions

The appliance functions are set at the factory so that your appliance is fully functional.

Before you alter, activate or deactivate the device functions, make sure that the following requirements are met:

- ❑ You have read and understood the descriptions of how the display works. (see 4 Functionality of the Touch & Swipe display)
- ❑ You have familiarised yourself with the operating and display elements of your appliance.

Switching the appliance off and on

Use this function to switch the entire appliance off and on.

Switching off the appliance

When you switch the appliance off, then the previously saved settings are saved.

Make sure that the following requirements are fulfilled:

- ❑ Handling instructions (see 12 Shutting down) are carried out.

Fig. 50

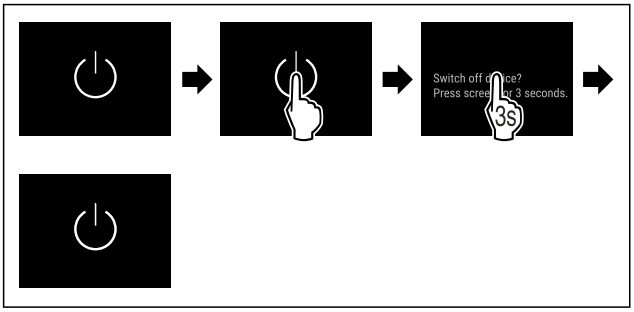

Fig. 51

▶ Carry out action steps according to the illustration.
▷ Appliance is switched off.
▷ The standby symbol appears in the display.
▷ Display turns black.

Switching on the appliance

If the display is in sleep mode:

▶ Briefly touch the display.

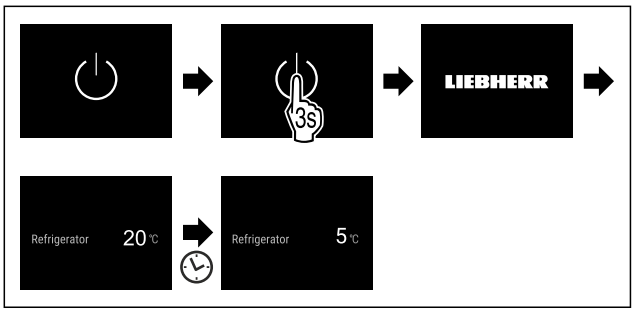

Fig. 52 Example illustration

▶ Carry out action steps according to the illustration. When the appliance starts in demo mode:
▶ Deactivating demo mode. (see Deactivating demo mode)
▷ The appliance is switched on.
▷ Previous settings are restored.
▷ The appliance cools to the target temperature set.

Temperature

Use this function to set the temperature.

The temperature depends on the following factors:

- Frequency of door opening
- Duration of door opening
- Room temperature of the installation site
- Type, temperature and quantity of food

Temperature zone	Factory-set temperature	Recommended setting
Fridge section	5 °C	4 °C

Setting the temperature

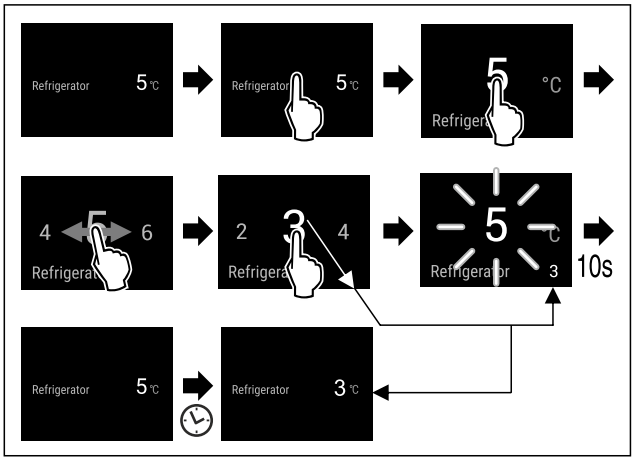

Fig. 53 Example illustration

▶ Carry out action steps according to the illustration.
▷ Temperature is set.

SuperCool

You can use this function to activate or deactivate Super-Cool. If SuperCool is activated, then the appliance increases the cooling capacity. It allows you to achieve lower cooling temperatures. You can activate SuperCool when you would like to cool a large quantity of food quickly.

If the function is active, the appliance operates at higher power. As a result, the appliance's operating noise may be temporarily louder and energy consumption will increase.

Activating SuperCool

Time for activation of the function:

- When you would like to store fresh food in the fridge section: Activate the function when inserting food.

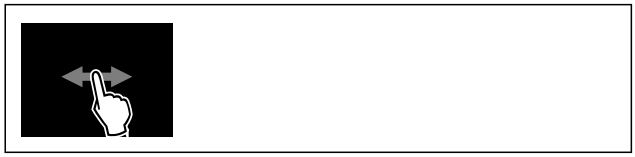

Fig. 54

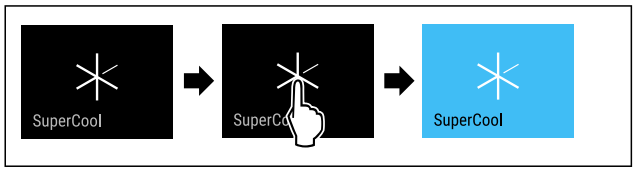

Fig. 55

▶ Carry out action steps according to the illustration.

-or-

▶ Activate with the SmartDevice app.

▷ SuperCool is activated.
▷ The temperature display turns blue.

Deactivating SuperCool

SuperCool is deactivated automatically after 18 hours. However, you can also deactivate SuperCool manually at any time:

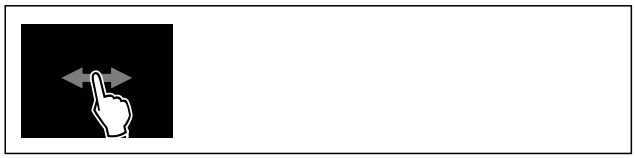

Fig. 56

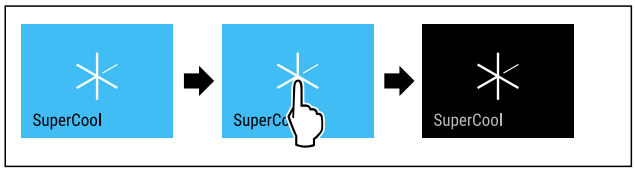

Fig. 57

▶ Carry out action steps according to the illustration.

-or-

▶ Deactivate with the SmartDevice app.

▷ SuperCool is deactivated.
▷ The appliance continues to run in normal mode.
▷ The appliance cools to the temperature set previously.

PowerCool

You can use this function to activate or deactivate PowerCool. PowerCool ensures optimised temperature layers for cooling your food.

The function applies to the fridge section.

Application:

- At higher room temperatures (as of approx. 35 °C)
- At high humidity, e.g. on summer days
- When storing moist food, in order to prevent condensate forming in the interior

Note
The fan may also run even if the function is deactivated. It therefore ensures even temperature distribution in the appliance.

If the function is active, the device operates at higher power. As a result, the device's operating noise may be temporarily louder and energy consumption will increase.

Activating PowerCool

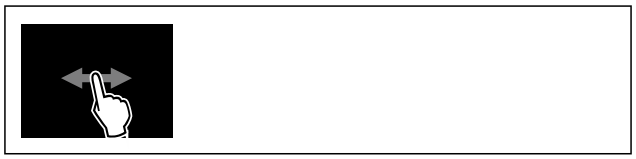

Fig. 58

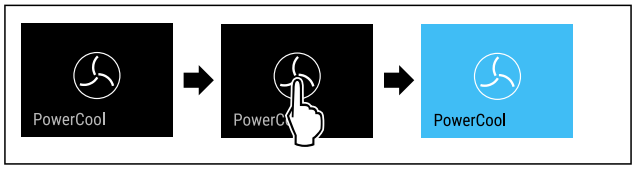

Fig. 59

▶ Carry out action steps according to the illustration.
▷ PowerCool is activated.

Deactivating PowerCool

Fig. 60

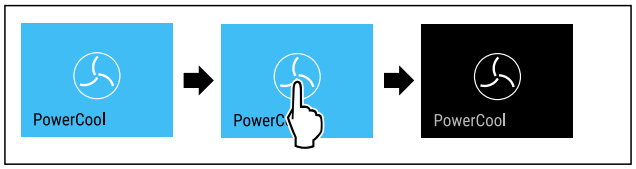

Fig. 61

▶ Carry out action steps according to the illustration.
▷ PowerCool is deactivated.

HolidayMode

You can use this function to activate or deactivate HolidayMode. If you activate HolidayMode, the fridge section is set to 15 °C. This saves you energy during longer periods of absence and prevents bad odours and growth of mould.

Appliance status when HolidayMode is active
Fridge section cools to 15 °C.
SuperCool is deactivated.
PowerCool is deactivated.

Activating HolidayMode

▶ Empty the fridge section completely.

Fig. 62

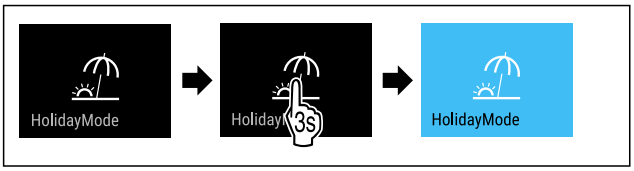

Fig. 63

▶ Carry out action steps according to the illustration.
▷ HolidayMode is activated.
▷ Temperature display turns blue and shows HolidayMode symbol.

Deactivating HolidayMode

Fig. 64

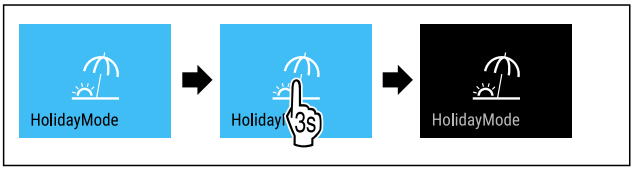

Fig. 65

▶ Carry out action steps according to the illustration.
▷ HolidayMode is deactivated.
▷ The appliance cools to the temperature set previously.

SabbathMode

You can use this function to activate or deactivate SabbathMode. If you activate this function, some electronic functions are switched off. As a result, your device meets the religious requirements for Jewish holidays such as Sabbath and complies with STAR-K Kosher certification.

Device status when SabbathMode is active
The status display shows SabbathMode permanently.
All functions on the display are locked except for the **Deactivate SabbathMode function**.
Active functions remain active.
The display remains bright when you close the door.
The interior lighting is deactivated.
Reminders are not implemented. The set time interval stops.
Reminders and warnings are not displayed.
There is no door alarm.
There is no temperature alarm.
After a power failure, the appliance returns to SabbathMode.

Device status

Note
This appliance has certification from the “Institute for Science and Halacha”. (www.machonhalacha.co.il)

You can find a list of STAR-K-certified appliances at www.star-k.org/appliances.

Activating SabbathMode

WARNING
Danger of food poisoning from spoiled food!
If you have SabbathMode activated and a power failure occurs, no message appears in the status display about the power failure. Once the power is restored, the appliance continues to operate in SabbathMode. The power failure may mean that food spoils and the consumption of this food could lead to food poisoning.
After a power failure:
▶ Do not consume food that was frozen and has thawed out.

Fig. 66

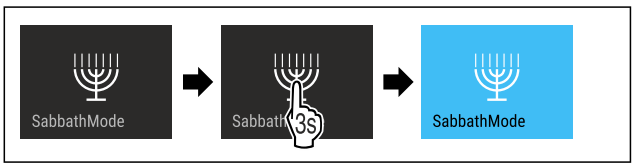

Fig. 67

▶ Carry out action steps according to the illustration.
▷ SabbathMode is activated.
▷ The status display shows SabbathMode permanently.

Deactivating SabbathMode

The SabbathMode is automatically deactivated after 80 hours. However, you can also deactivate SabbathMode manually at any time:

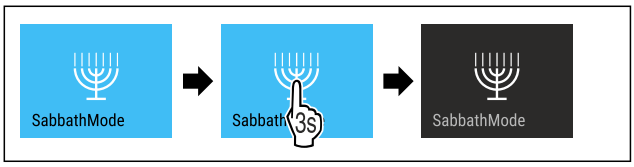

Fig. 68

▶ Carry out action steps according to the illustration.
▷ SabbathMode is deactivated.

EnergySaver

You can use this function to activate or deactivate Energy saving mode. If energy saving mode is activated, the energy consumption decreases and the temperature in the device increases. The food remains fresh, but the shelf life is shortened.

Temperature zone	Recommended setting (see Setting the temperature)	Temperature with active EnergySaver
5 °C Fridge section	4 °C	7 °C

Temperatures

Activating EnergySaver

Fig. 69

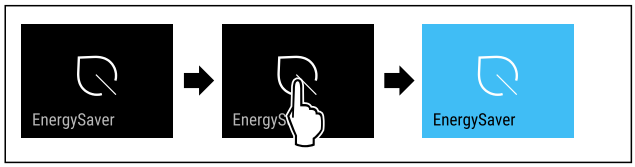

Fig. 70

▶ Carry out action steps according to the illustration.
▷ Energy saving mode is activated.

Deactivating EnergySaver

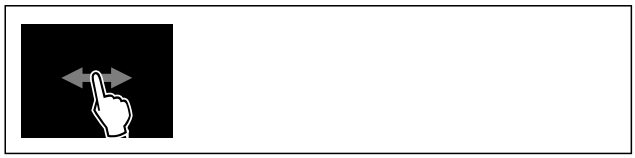

Fig. 71

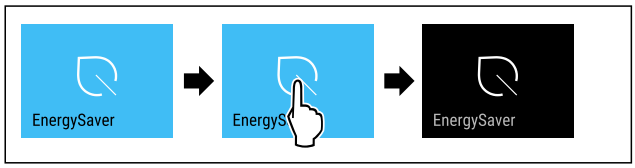

Fig. 72

▶ Carry out action steps according to the illustration.
▷ Energy saving mode is deactivated.

CleaningMode

You can use this function to activate or deactivate CleaningMode. CleaningMode enables the appliance to be cleaned conveniently.

This setting applies to the fridge section.

Application:

- Clean the fridge section. (see 10.4 Cleaning the appliance)

Device status when CleaningMode is active
The status display shows CleaningMode permanently.
The fridge section is switched off.
Interior lighting is activated.
The reminders and warnings are not displayed. No signal tone sounds.

Device status

Activating CleaningMode

Fig. 73

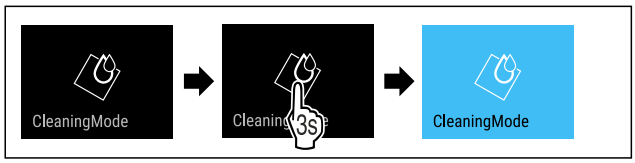

Fig. 74

▶ Carry out action steps according to the illustration.
▷ CleaningMode is activated.
▷ The status display shows CleaningMode permanently.

Deactivating CleaningMode

CleaningMode is deactivated automatically after 60 minutes. However, you can also deactivate CleaningMode manually at any time:

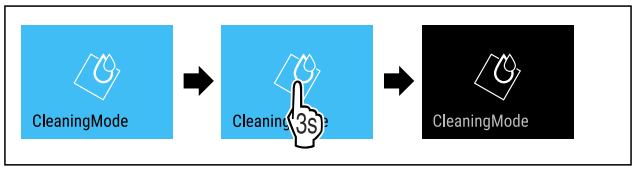

Fig. 75

▶ Carry out action steps according to the illustration.
▷ CleaningMode is deactivated.
▷ The appliance cools to the temperature set previously.

Input lock

You can use this function to activate or deactivate the input lock. The input lock prevents the appliance being operated accidentally, e.g. by children.

Application:

- Avoid unintentional modification of functions.
- Avoid unintentional switching off of the device.
- Avoid unintentional temperature setting.

Activating the input lock

If you activate the input lock, you can continue to navigate in the menus but you cannot select or change other functions.

Fig. 76

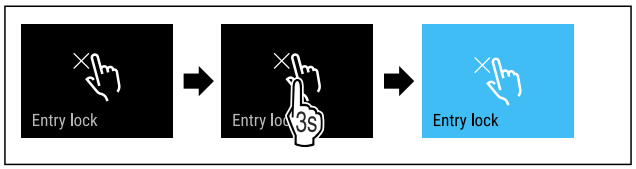

Fig. 77

▶ Carry out action steps according to the illustration.
▷ Input lock is activated.

Deactivating the input lock

Fig. 78

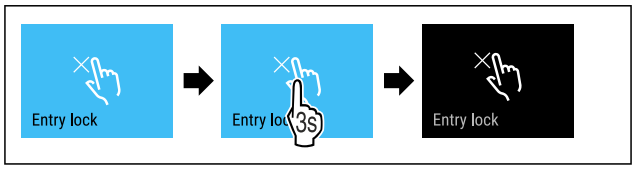

Fig. 79

▶ Carry out action steps according to the illustration.
▷ Input lock is deactivated.

Language

Use this function to set the display language.

You can select the following languages:
- Deutsch
- English
- Français
- Español
- Italiano
- Nederlands
- Čeština
- Polski
- Português
- Bulgarian
- Русский
- 温度单位

Setting the language

Fig. 80

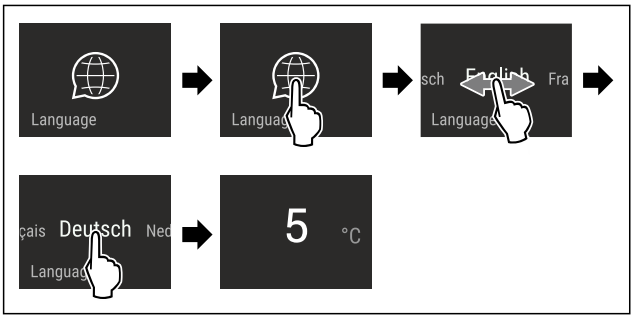

Fig. 81 Example illustration depending on the language and temperature

▶ Carry out action steps according to the illustration.
▷ The language is set.
▷ The display returns to the status display.

Temperature unit

Use this function to set the temperature unit. You can set degrees Celsius or degrees Fahrenheit as the temperature unit.

Setting the temperature unit

Fig. 82

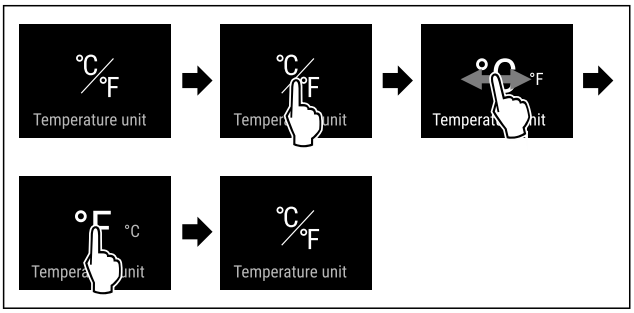

Fig. 84 Example illustration: Switch from degrees Celsius to degrees Fahrenheit.

▶ Carry out action steps according to the illustration.
▷ The temperature unit is set.

Display brightness

Use this function to set the display brightness in stages.

You can select the following brightness levels:
- 40 %
- 60 %
- 80 %
- 100 % (pre-setting)

Setting the brightness

Fig. 85

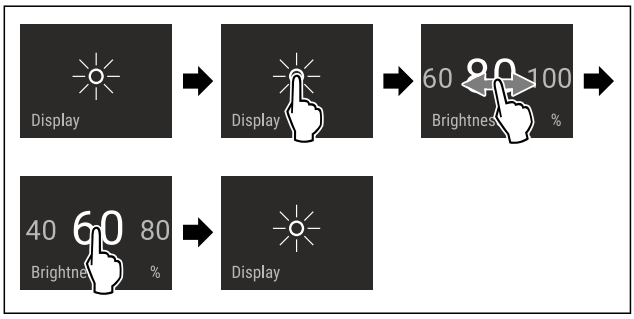

Fig. 86 Example illustration: Switch from 80 % to 60 %.

▶ Carry out action steps according to the illustration.
▷ The brightness is set.

WiFi

Use this function to connect your appliance to WiFi. You can then operate it via the SmartDevice app on a mobile device. You can also use this function to disconnect or reset the WiFi connection.

More information on the SmartDevice: (see 2.3 SmartDevice)

Note
The SmartDevice function is not available in the following countries: Russia, Belarus, Kazakhstan.

Establishing the WiFi connection for the first time

Make sure that the following requirements are fulfilled:
❑ You have installed the SmartDevice app (see apps.home.liebherr.com).
❑ Registration in the SmartDevice app is completed.

Fig. 87

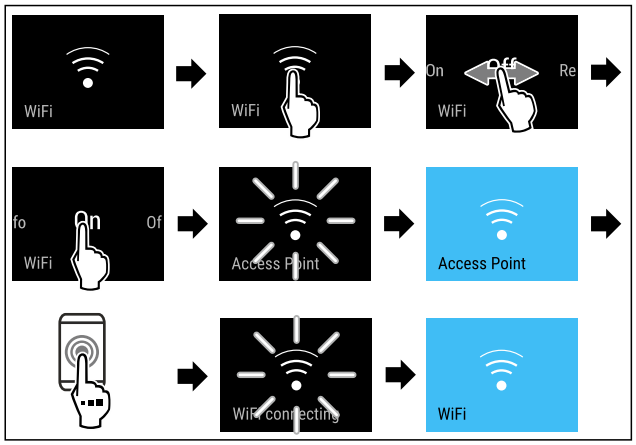

Fig. 88

▶ Carry out action steps according to the illustration.
▷ Connection is established.

Disconnecting from the WiFi

Fig. 89

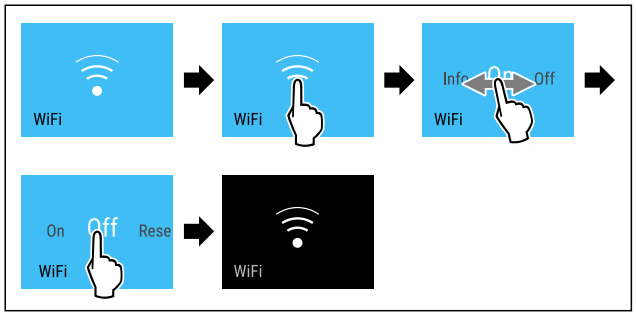

Fig. 90

▶ Carry out action steps according to the illustration.
▷ There is no connection.

Resetting the WiFi connection

Fig. 91

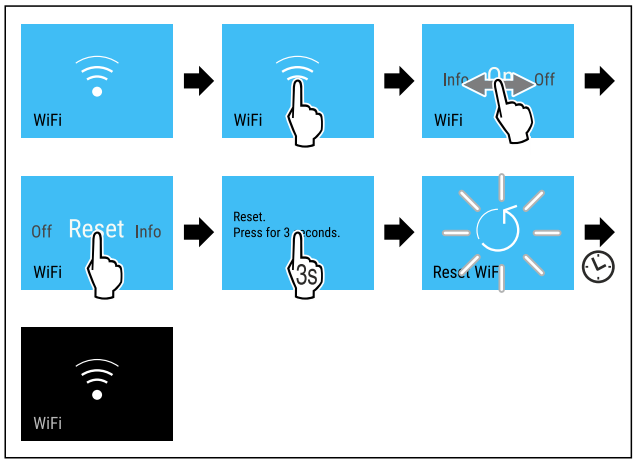

Fig. 92

▶ Carry out action steps according to the illustration.
▷ WiFi connection and other WiFi settings are reset to factory settings.

Showing information about the WiFi connection

Fig. 93

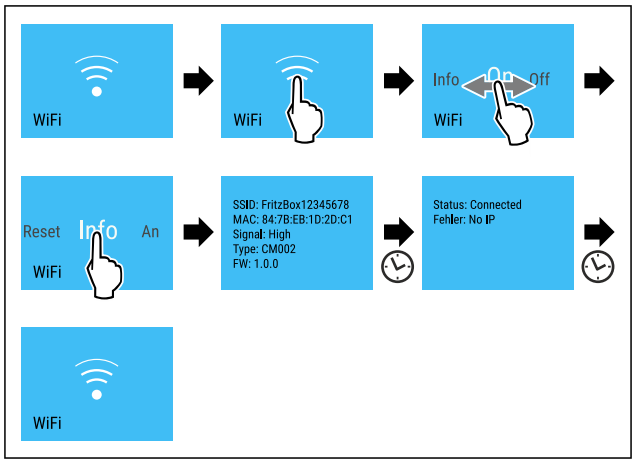

Fig. 94

▶ Carry out action steps according to the illustration.

Device information

Use this function to indicate the model name, index, serial number and service number of your device. You will need the device information when you contact customer service. (see 11.4 Customer Service)

This function also opens the Advanced menu. (see 4 Functionality of the Touch & Swipe display)

Indicating the device information

Fig. 95

Fig. 96

▶ Carry out action steps according to the illustration.
▷ Display indicates device information.

Software

Use this function to indicate the software version of your device.

Indicating the software version

Fig. 97

Fig. 98

▶ Carry out action steps according to the illustration.
▷ Display indicates software version.

Door alarm

Use this function to activate or deactivate the door alarm. The door alarm sounds if the door is open for too long. The door alarm is activated on delivery. You can set how long the door may be open before the door alarm sounds.

The following values can be set:

- 1 minute
- 2 minutes
- 3 minutes
- Off

Setting the door alarm

Fig. 99

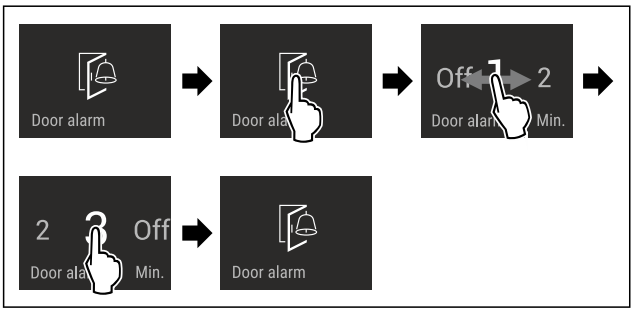

Fig. 100 Example illustration: Change door alarm from 1 minute to 3 minutes.

▶ Carry out action steps according to the illustration.
▷ The door alarm is set.

Deactivating the door alarm

Fig. 102

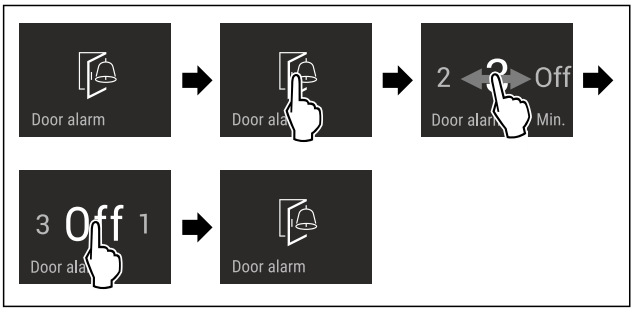

Fig. 103

▶ Carry out action steps according to the illustration.
▷ The door alarm is deactivated.

Demo mode

Demo mode is a special feature for dealers who want to demonstrate appliance features. If you activate demo mode, all refrigeration functions are deactivated.

If you switch on your appliance and “Demo” appears in the status display, then demo mode is already activated.

If you activate and then deactivate demo mode, the appliance will be reset to factory defaults. (see Resetting to factory settings)

Activating demo mode

Fig. 104

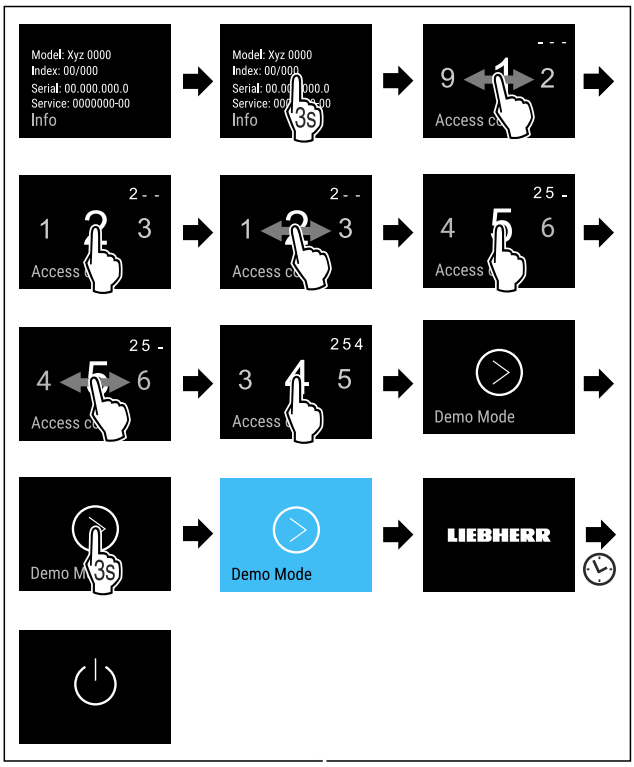

Fig. 105

▶ Carry out action steps according to the illustration.
▷ Demo mode is activated.
▷ Appliance is switched off.
▶ Switch on the appliance. (see 5.1 Switching on appliance (first use))
▷ “DEMO” appears in the status display.

Deactivating demo mode

Fig. 106

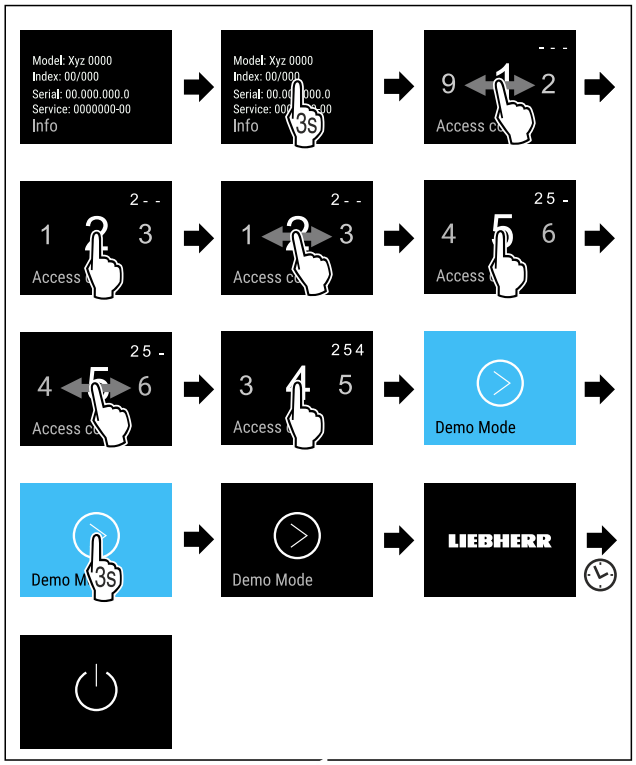

Fig. 107

▶ Carry out action steps according to the illustration.
▷ Demo mode is deactivated.
▷ Appliance is switched off.
▶ Switch on the appliance. (see 5.1 Switching on appliance (first use))
▷ Appliance is reset to factory settings.

Resetting to factory settings

Use this function to reset all settings to factory defaults. All settings you have made so far are reset to their original settings.

Performing a reset

Fig. 108

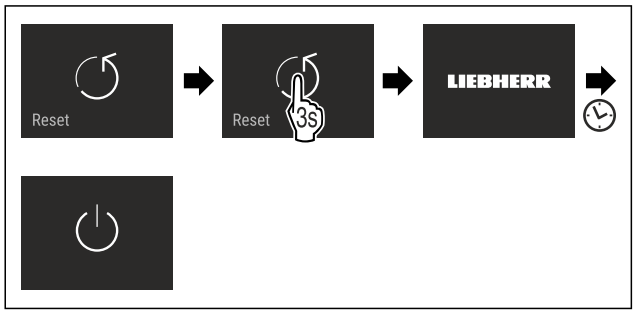

Fig. 109

▶ Carry out action steps according to the illustration.
▷ Device is reset.
▷ Device is switched off.
▶ Restart the device. (see 5.1 Switching on appliance (first use))

8.3 Messages

There are two categories of messages:

Category	Importance
Warning	Warnings appear in the event of a door alarm or malfunction. Simple warnings can be cancelled by yourself. In the event of serious malfunctions, you must contact customer service. (see 11.4 Customer Service)
Reminder	Reminders remind you of general processes. You can carry out these operations to end the message.

8.3.1 Overview of warnings

Behaviour of the appliance in the event of warnings:

- Warning appears in red on the display.
- The alarm tone sounds at an ever-increasing volume.
- The interior lighting pulsates for some warnings.

Message	Cause	Exit the message
Close the door. **Door alarm**	The message appears if the door is open for too long.	Carry out action steps. (see Door alarm)
Error **Error**	The message appears if there is an appliance error. A component of the appliance has a fault.	Carry out action steps. (see Error)
WiFi Error **WLAN error**	The message appears if the appliance could not be connected to the WLAN. (see Establishing the WiFi connection for the first time) The message only appears during the initial setup.	Carry out action steps. (see WLAN error)

8.3.2 Ending warnings

Door alarm

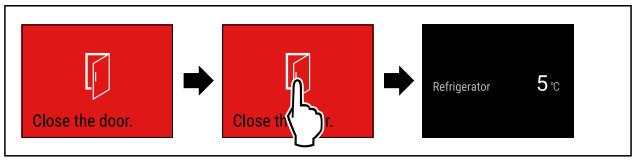

Fig. 110 Example illustration

▶ Carry out action steps according to the illustration.
-or-
▶ Close the door.

▷ The display returns to the status indicator.

You can set how long the door may be open before the door alarm sounds. (see Setting the door alarm)

Error

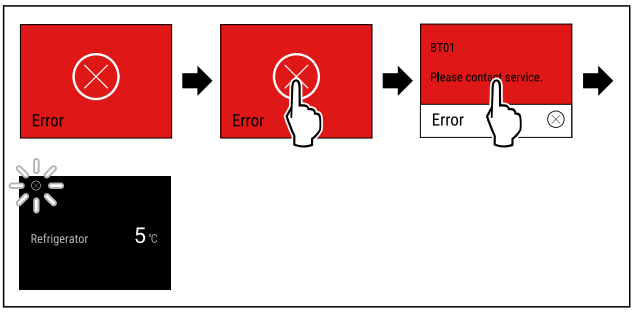

Fig. 111 Example illustration

▶ Briefly touch the display.
▷ Error code is displayed.
▶ Note the error code.
▶ Briefly touch the display.
▷ The display returns to the status indicator.
▶ Contact Customer Service. (see 11.4 Customer Service)

WLAN error

▶ Check WLAN connection.
▶ Reconnect the appliance to the WLAN. (see WiFi)

8.3.3 Overview of reminders

Behaviour of the appliance during reminders:

- Reminder appears yellow on the display.
- Alarm tone sounds.
- The interior lighting pulsates for some reminders.

Message	Cause	Exit the message
FreshAir filter **Replace the FreshAir activated carbon filter**	The message appears when the FreshAir activated carbon filter needs to be replaced.	Carry out action steps. (see Replace the FreshAir activated carbon filter)

8.3.4 Ending reminders

Replace the FreshAir activated carbon filter

Liebherr recommends: Replace the FreshAir activated carbon filter every 6 months.

Note
FreshAir activated charcoal filters can be purchased from the Liebherr-Hausgeräte store at go.liebherr.com/47wtc4.

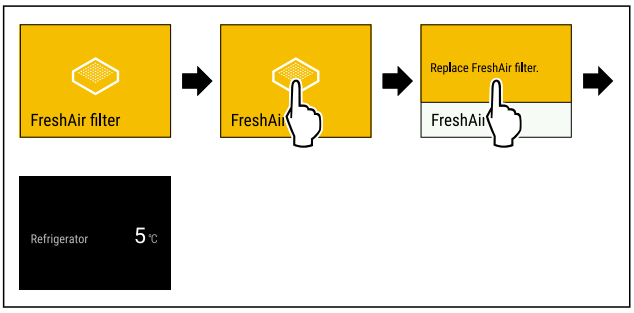

Fig. 112 Example illustration

▶ Briefly touch the display.
▷ Display shows reminder information.
▶ Briefly touch the display.
▶ Replace the activated carbon filter. (see 10.1 FreshAir carbon filter)
▷ Activated carbon filter ensures optimum air quality in the cooling unit.
▷ Reminder appears again after 6 months.

If you no longer wish to receive this reminder, you can deactivate it.

9 Features

9.1 Drawers

You can remove the drawers for cleaning.

The way to remove/insert the drawers varies depending on the pull-out system. Your appliance can contain various pull-out systems.

Note
The energy consumption increases and the cooling power goes down if ventilation is not sufficient.
▶ Always keep the inside vents at the rear wall clear.

9.2 Telescopic unit

The telescopic unit is equipped with two drawers, a fruit and vegetable box and a large container. You can adjust the dividers in the drawers and in the large container or remove the fittings for cleaning. (see 10.2.2 Telescopic unit)

Note
Please note the information on categorising food.
(see 6.2 Fridge section with telescopic unit)

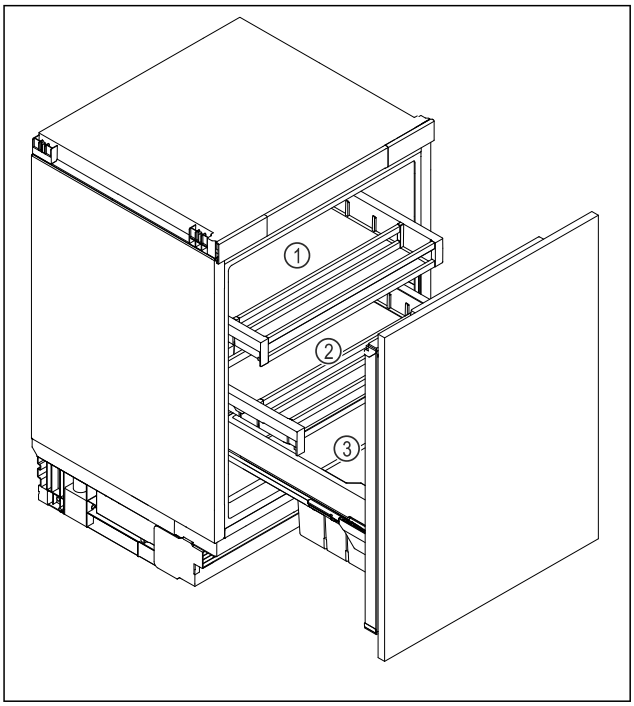

Fig. 113 Example illustration

(1) Top drawer with compartment divider
(2) Bottom drawer with compartment divider
(3) Container with fruit and vegetable box and compartment divider

9.2.1 Moving the compartment dividers

You can move the individual shelf dividers in the telescopic unit in the same way.

Ensure that the following requirements are met:

❑ Telescopic unit is pulled out as far as it will go.
❑ Drawer is pulled out.

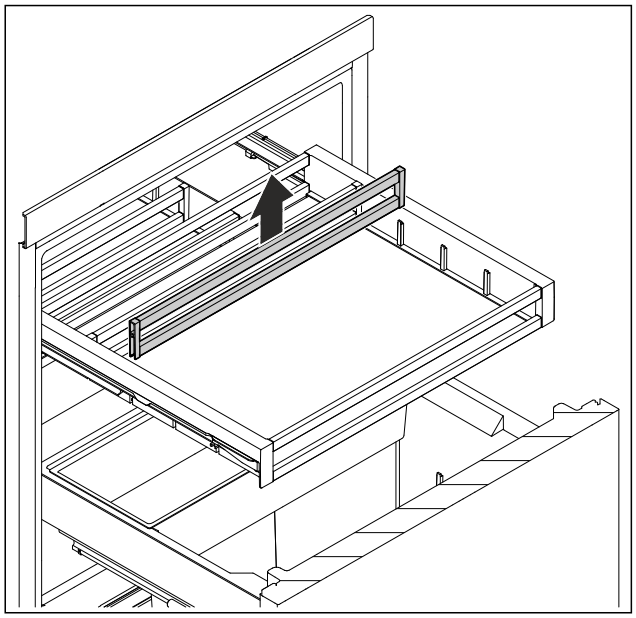

Fig. 114 Example illustration

▶ Remove the compartment divider upwards.

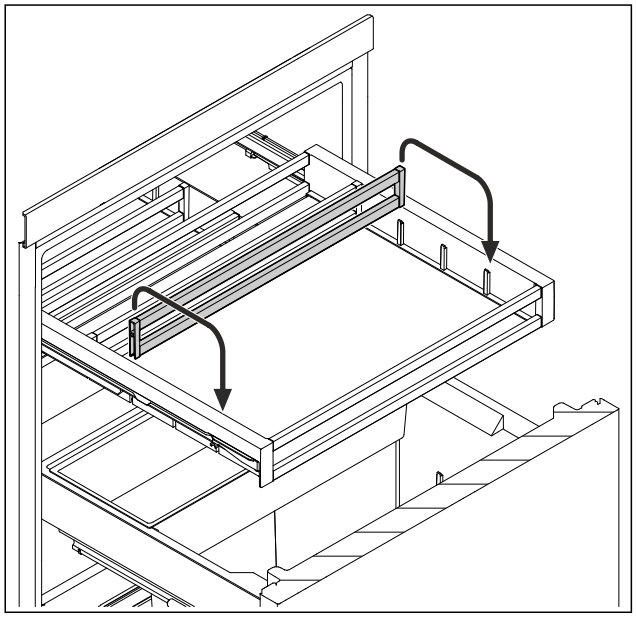

Fig. 115 Example illustration

▶ Insert the compartment divider at the desired position.

9.3 Butter dish

9.3.1 Opening/closing the butter dish

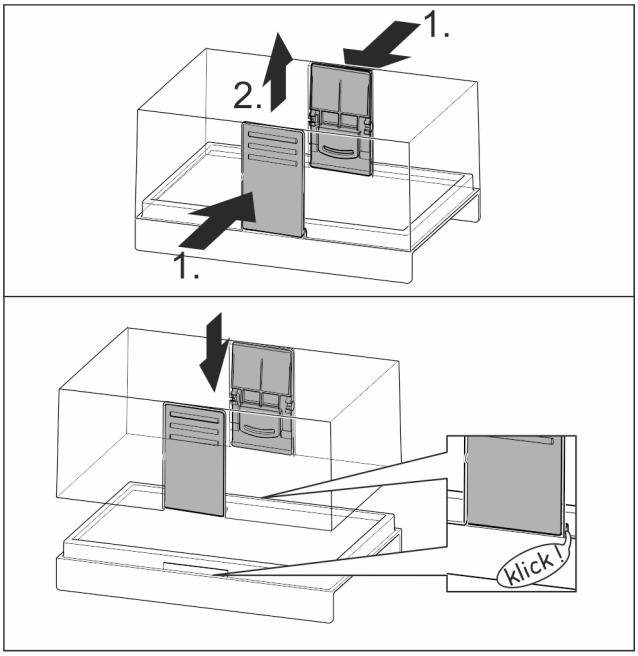

Fig. 116

9.3.2 Dismantling the butter dish

You can take the butter dish apart for cleaning.

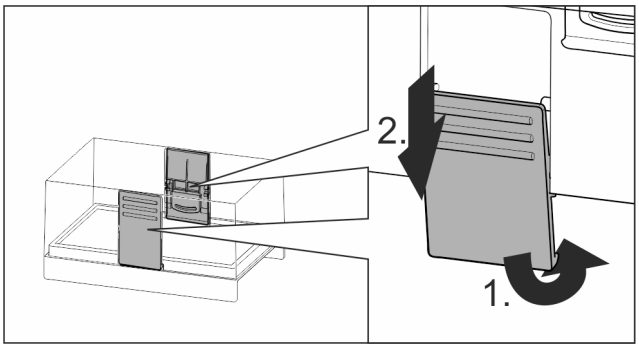

Fig. 117

▶ Disassembling the butter dish.

9.4 Egg rack

You can pull out and turn the egg rack. You can use both sides of the egg rack so you can label specifics like the purchase date.

9.4.1 Using the egg rack

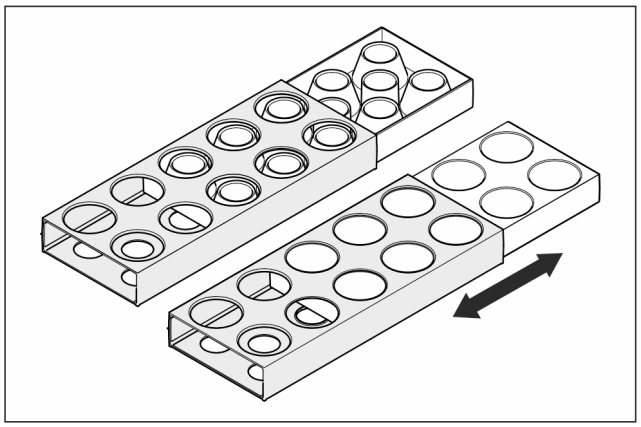

Fig. 118

▶ Top layer: for storing hen eggs.
▶ Bottom layer: for storing quail eggs.

9.5 FlexCube

The FlexCube has different sized openings, so you can store small items such as tubes, open yoghurt pots or quail eggs in it. The FlexCube fits into all Liebherr door racks, for example. If necessary, you can also set up several FlexCubes next to each other.

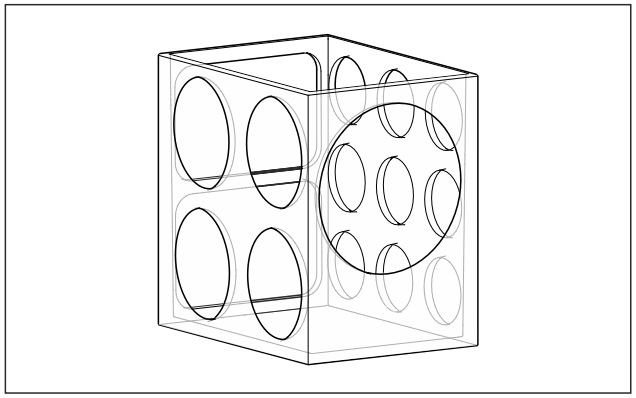

Fig. 119 Example illustration

Note
These accessories can be purchased from the Liebherr-Hausgeräte shop at go.liebherr.com/47wtc4.

9.5.1 Using the FlexCube

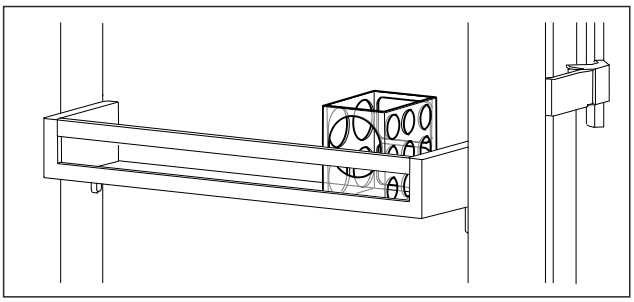

Fig. 120 Example illustration

▶ Insert the FlexCube in the door rack.

-or-

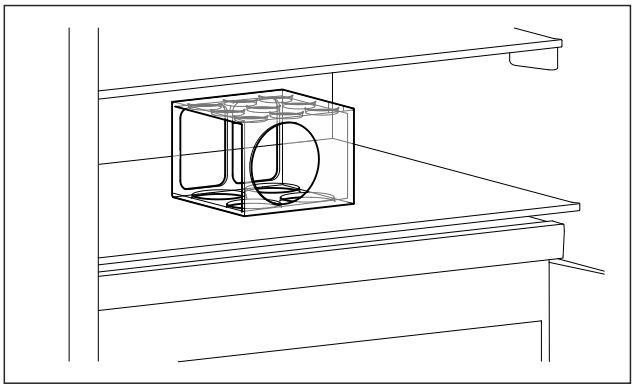

Fig. 121 Example illustration

▶ Place FlexCube on shelf.

▶ Sort small parts into the FlexCube for storage.

10 Maintenance

10.1 FreshAir carbon filter

The FreshAir carbon filter is in the compartment above the fan.

It guarantees the best air quality.

- ❑ Replace the carbon filter every 6 months.
  When the reminder is set, a message on the display prompts you to change it.
- ❑ The carbon filter can be disposed of with the regular household waste.

Note
FreshAir activated charcoal filters can be purchased from the Liebherr-Hausgeräte store at go.liebherr.com/47wtc4.

10.1.1 Removing the FreshAir carbon filter

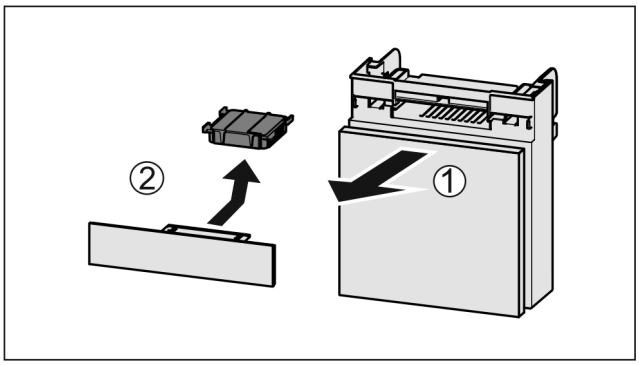

Fig. 122

▶ Pull out the compartment *Fig. 122 (1)*.
▶ Remove the carbon filter *Fig. 122 (2)*.

10.1.2 Inserting the FreshAir carbon filter

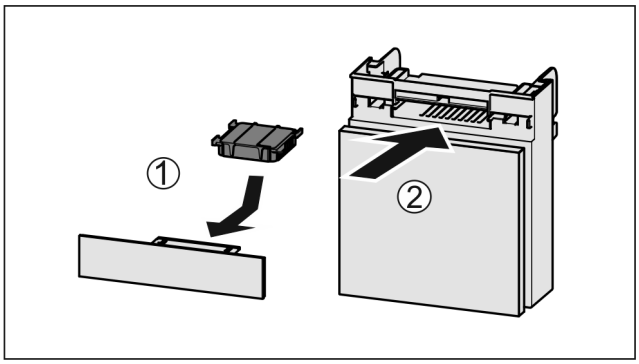

Fig. 123

▶ Insert the carbon filter as shown in the diagram *Fig. 123 (1)*.

▷ The carbon filter clicks into place.
If the carbon filter is pointing downwards:

▶ Push the compartment in *Fig. 123 (2)*.

▷ The carbon filter is now ready for use.

10.2 Disassembling / assembling pull-out systems

10.2.1 Notes on disassembly

You can disassemble some of the pull-out systems for cleaning. Your appliance can contain a variety of pull-out systems.

The following pull-out systems can be disassembled or cannot be disassembled:

Pull-out system	can be disassembled / cannot be disassembled
Full extension drawer in telescopic unit	can be disassembled
Telescopic unit	can be disassembled (see 10.2.2 Telescopic unit)

10.2.2 Telescopic unit

The drawers, fruit and vegetable box, compartment dividers and large bin can be removed for cleaning.

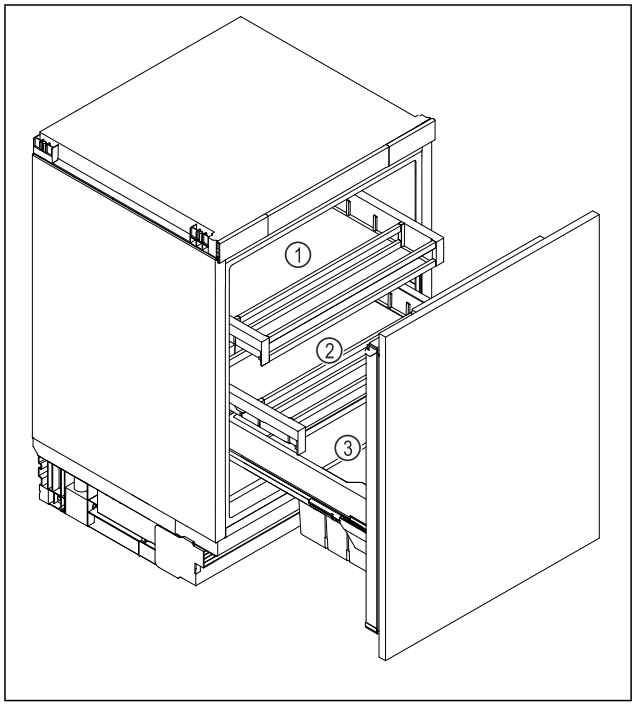

Fig. 124 Example illustration

(1) Top drawer with compartment divider

(2) Bottom drawer with compartment divider

(3) Container with fruit and vegetable box and compartment divider

Removing the drawer

Remove the individual drawers in the telescopic unit in the same way.

Ensure that the following requirements are met:

❑ Drawer is emptied.

❑ Telescopic unit is pulled out as far as it will go.

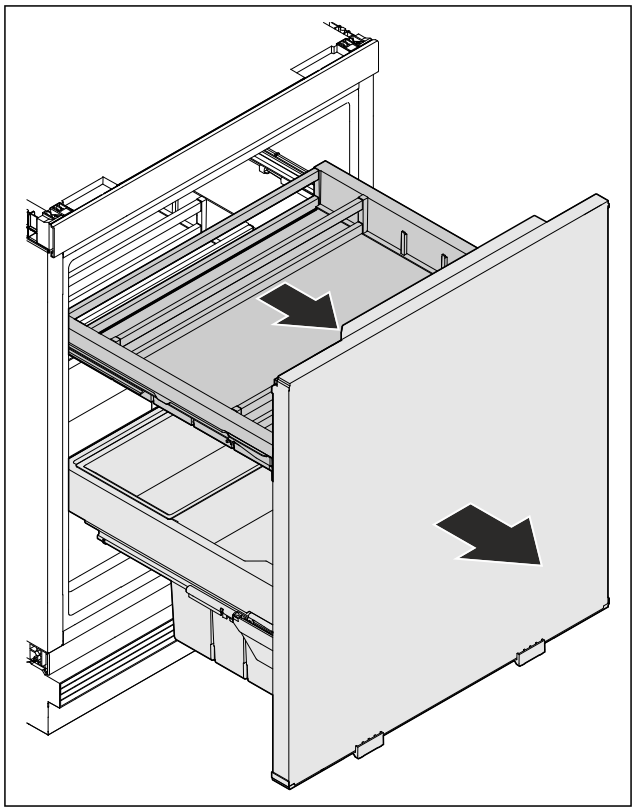

Fig. 125 Example illustration

▶ Pull the drawer out as far as it will go.

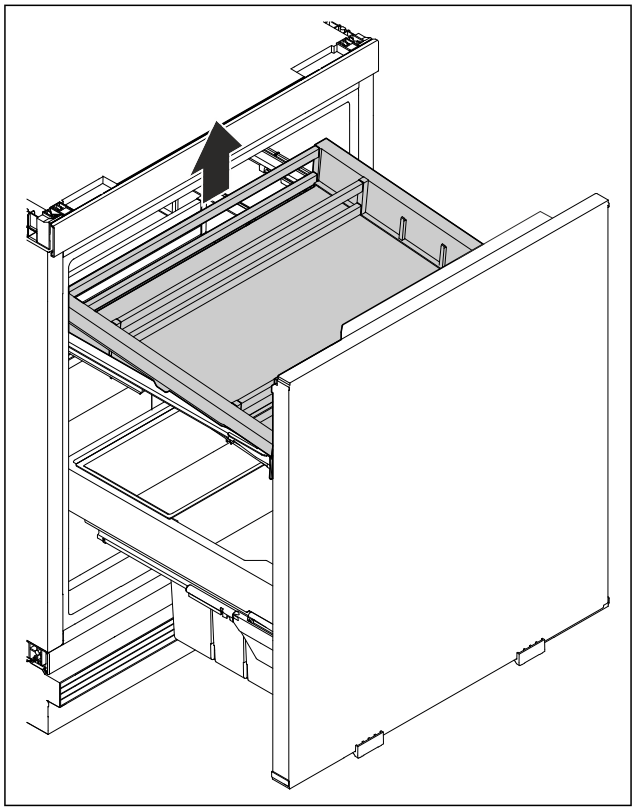

Fig. 126 Example illustration

▶ Pull the rear drawer up.

▷ Drawer detaches from the rails.

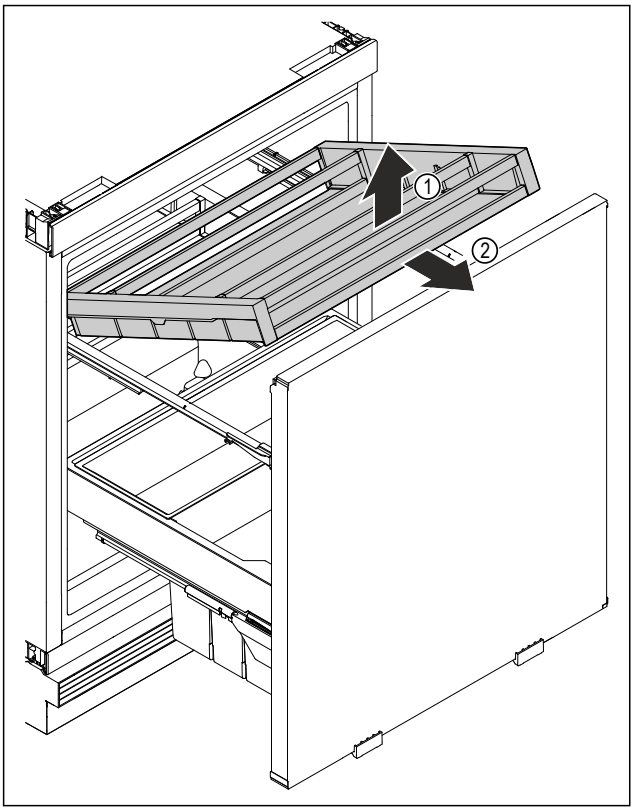

Fig. 127 Example illustration

▶ Pull the drawer out forwards at an angle.
▷ The drawer has been removed.

Removing the compartment dividers

You can move the individual compartment dividers in the telescopic unit in the same way.

Ensure that the following requirements are met:

❑ Telescopic unit is pulled out as far as it will go.
❑ Drawer is pulled out or removed.

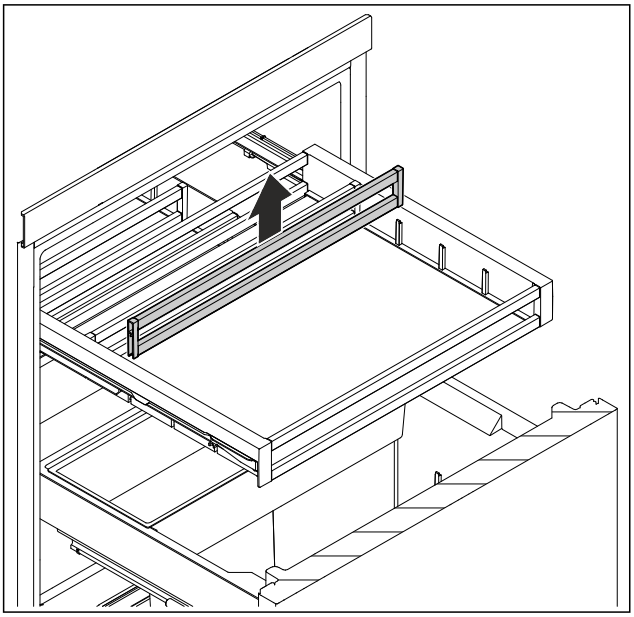

Fig. 128 Example illustration

▶ Remove the compartment divider upwards.

Removing the fruit and vegetable box

Ensure that the following requirements are met:

❑ Lower telescopic unit is pulled out as far as it will go.
❑ Drawers are pushed in.

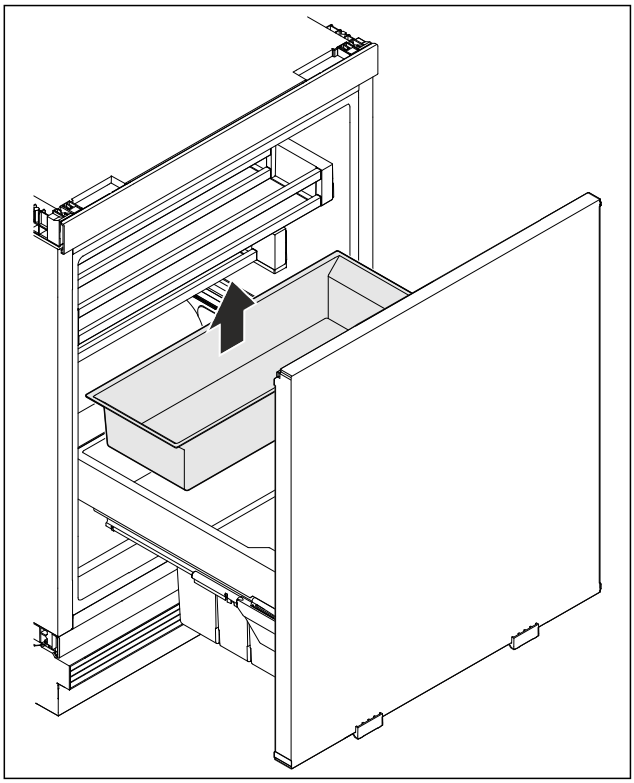

Fig. 129 Example illustration

▶ Remove the fruit and vegetable box upwards.

Removing the container

Ensure that the following requirements are met:

❑ Lower telescopic unit is pulled out as far as it will go.
❑ Drawers are pushed in.
❑ Fruit and vegetable box is removed.

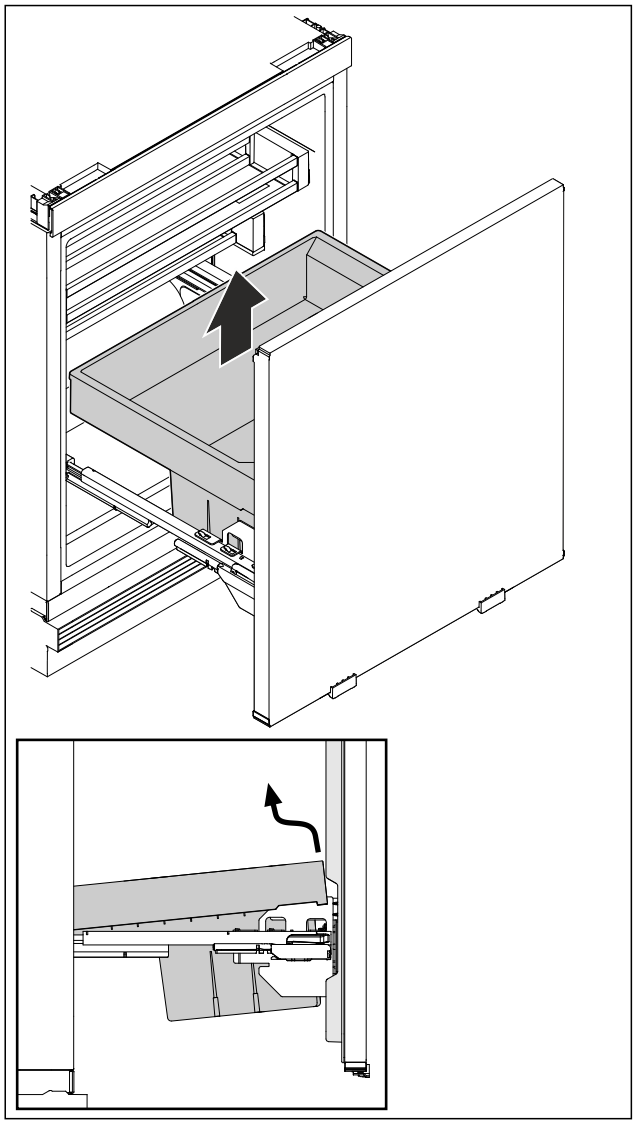

Fig. 130 Example illustration

▶ Lift the container forwards.
▶ Remove the container diagonally upwards.

Inserting the container

Ensure that the following requirements are met:

❑ Lower telescopic unit is pulled out as far as it will go.
❑ Drawers are pushed in.

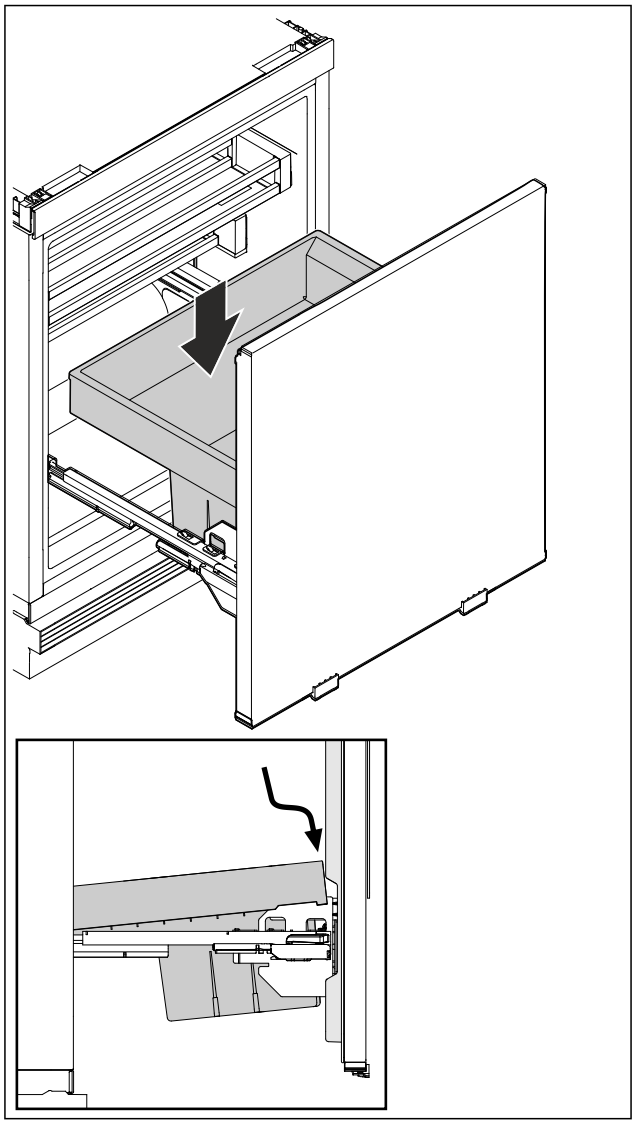

Fig. 131 Example illustration

▶ Place the container at the rear on the rails on the right and left.
▶ Lower the front of the container so that the container encloses the rails on the right and left.
▷ Container is firmly seated in the telescopic unit.

Inserting the fruit and vegetable box

Ensure that the following requirements are met:

❑ Lower telescopic unit is pulled out as far as it will go.
❑ Drawers are pushed in.
❑ The container has been inserted.

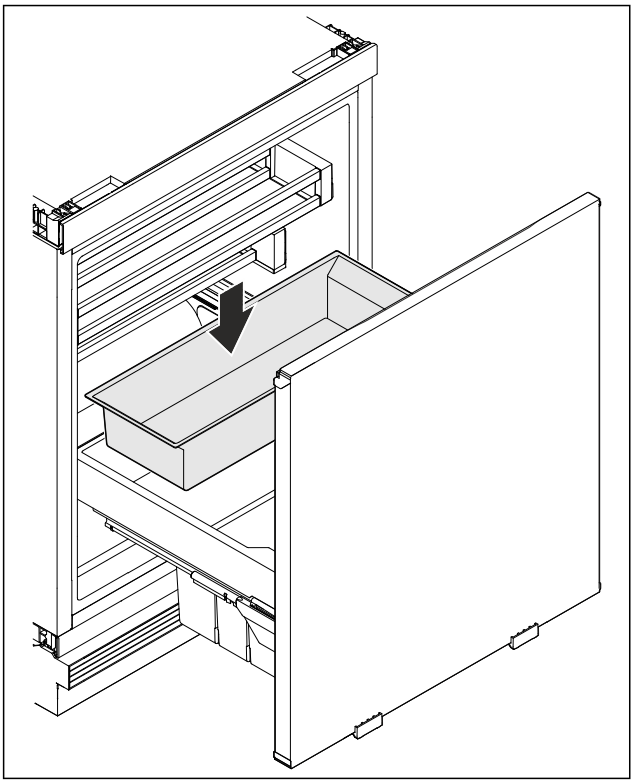

Fig. 132 Example illustration

▶ Insert the fruit and vegetable box from above.

Inserting the drawer

Insert the individual drawers in the telescopic unit in the same way.

Ensure that the following requirements are met:

❑ Telescopic unit is pulled out as far as it will go.

NOTICE
Risk of damage due to incorrectly inserted drawer!
Damage to the fan in the appliance. If you do not insert the top drawer correctly, the drawer may hit the appliance's fan when you close the telescopic unit.
▶ Insert the top drawer as instructed.

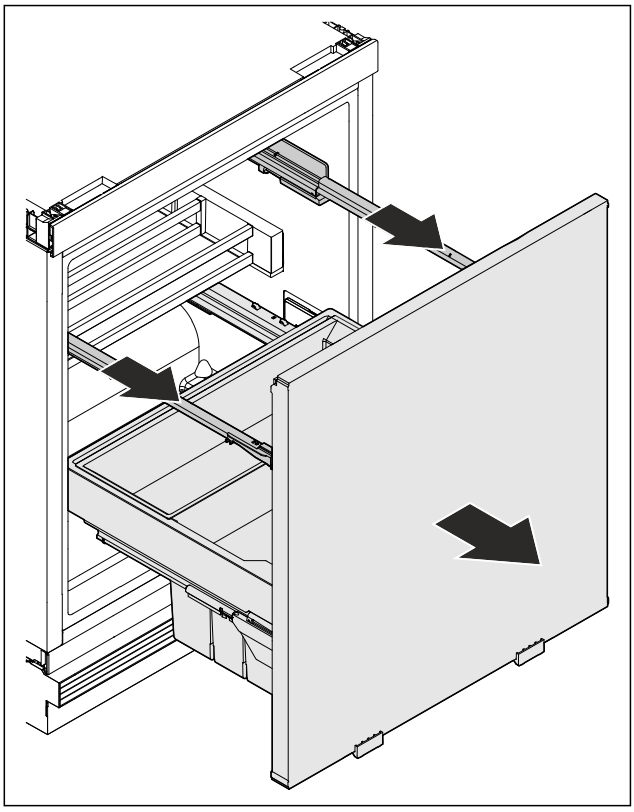

Fig. 133 Example illustration

▶ Pull out the rails.

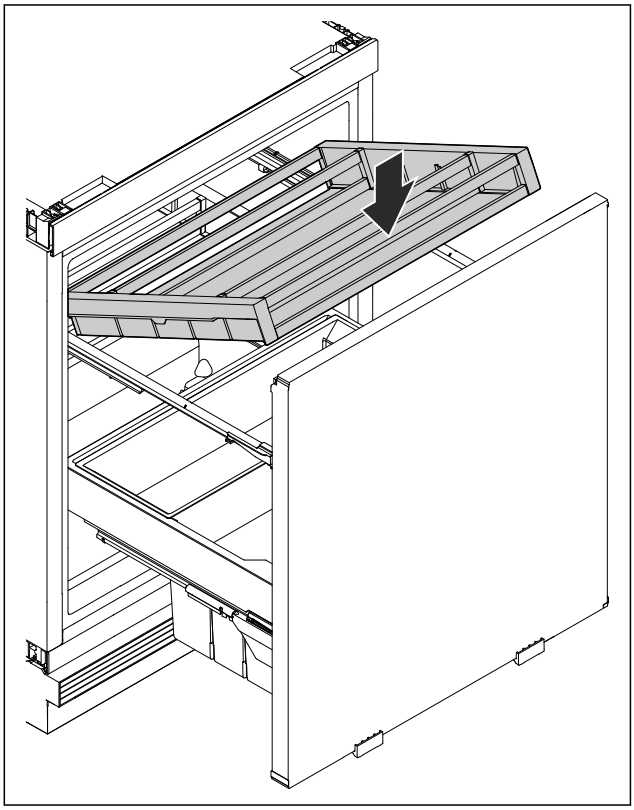

Fig. 134 Example illustration

▶ Place the drawer on the rails from above and behind at an angle.
▶ Lower the drawer forwards.
▶ Push the drawer down forwards.
▷ The drawer locks in.

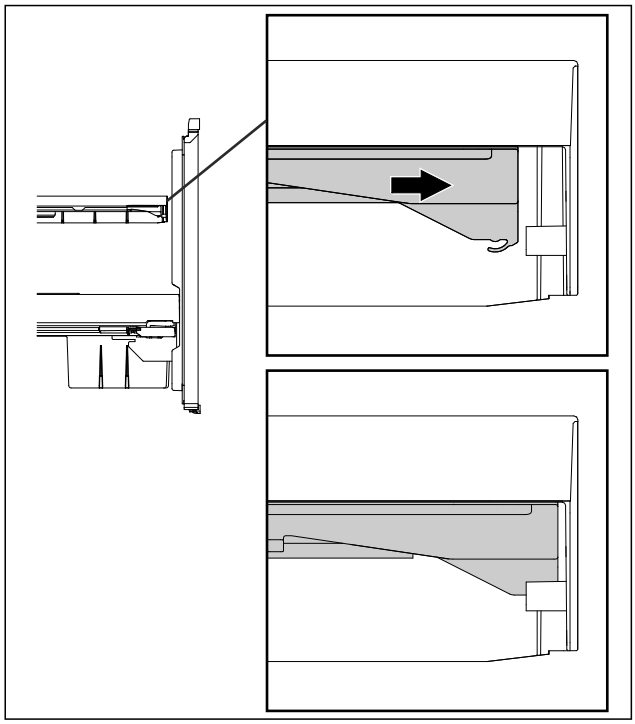

Fig. 135 Example illustration

- ▶ Push the drawer as far as it will go towards the front of the telescopic unit.
- ▶ Push in the drawer carefully.

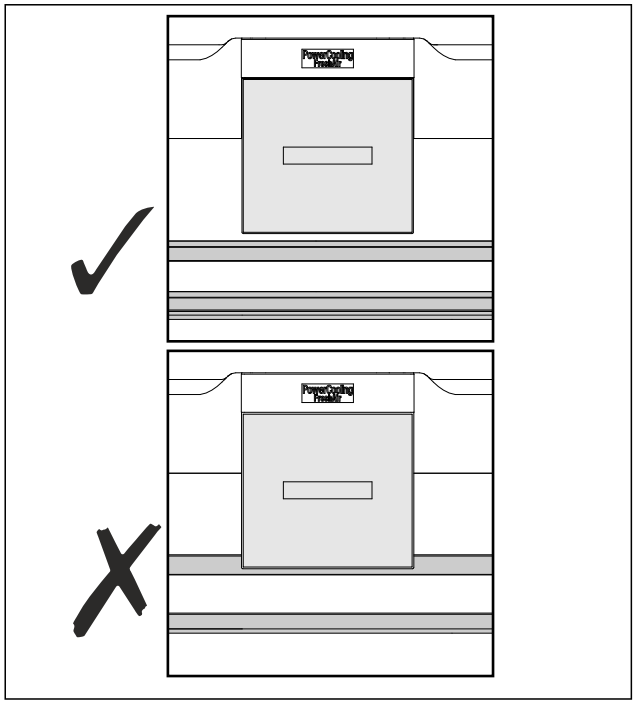

Fig. 136 Example illustration: Fan and drawer rails in the interior of the appliance

- ▶ Check that the rear rail has sufficient clearance under the fan when the top drawer is pushed in.

10.3 Defrosting the appliance

WARNING
Improper defrosting of the appliance!
Injuries and damage.
- ▶ Do not use mechanical equipment or other methods to speed up the defrosting process other than those recommended by the manufacturer.
- ▶ Do not use electrical heating or steam-cleaning appliances, naked flames or defroster sprays to defrost.
- ▶ Do not use sharp objects to remove ice.

Defrosting is performed automatically. The water from the thawing process drains through the outlet and evaporates.

Water drops or a thin layer of frost or ice can form on the back wall; this is a completely normal part of the appliance's function. This must not be removed.
- ▶ Clean the drain opening at regular intervals. (see 10.4 Cleaning the appliance)

10.4 Cleaning the appliance

10.4.1 Preparation

WARNING
Danger of electric shock!
- ▶ Remove the refrigerator connector or interrupt the power supply.

WARNING
Danger of fire!
- ▶ Do not damage the refrigeration circuit.

- ▶ Empty the appliance.
- ▶ Unplug the mains plug.

-or-

- ▶ Activate the CleaningMode. (see CleaningMode)

10.4.2 Cleaning the interior

NOTICE
Improper cleaning!
Damage to the appliance.
- ▶ Only use soft cleaning cloths and ph-neutral all-purpose cleaners.
- ▶ Do not uses abrasive sponges or steel wool which may cause scratches.
- ▶ Do not use any sharp or abrasive cleaning agents, nor any that contain sand, chloride or acid.

- ▶ Plastic surfaces: clean by hand with a soft clean cloth, lukewarm water and a little detergent.
- ▶ Metal surfaces: clean by hand with a soft clean cloth, lukewarm water and a little detergent.
- ▶ Drain hole: remove deposits using a thin item (for example a cotton bud).

10.4.3 Clean the components

NOTICE
Improper cleaning!
Damage to the appliance.
▶ Only use soft cleaning cloths and ph-neutral all-purpose cleaners.
▶ Do not uses abrasive sponges or steel wool which may cause scratches.
▶ Do not use any sharp or abrasive cleaning agents, nor any that contain sand, chloride or acid.

Clean with a soft, clean cloth, lukewarm water and some detergent:

- Drawer

Clean with a damp cloth:

- Retractable rails
  Please note: The grease in the tracks is used for lubrication and must not be removed!

Wash in the dishwasher up to 60 °C:

- Egg rack
- Butter dish
- FlexCube

▶ To disassemble components: see the relevant section.
▶ Clean the components.

10.4.4 After cleaning

▶ Wipe the appliance and the components dry.
▶ Connect and switch on the appliance.
The temperature is cold enough:
▶ Place the food inside.
▶ Repeat cleaning regularly.

11 Customer help

11.1 Technical specifications

Temperature range	
Cooling	2 °C to 9 °C

Lighting	
Class[1]	Light source
This product contains one or more energy efficiency class G light sources.	LED

[1] *The appliance may contain light sources with different energy efficiency classes. The lowest energy efficiency class is indicated.*

For appliances with a WiFi connection:

Frequency specification	
Frequency band	2.4 GHz
Maximum radiated power	< 100 mW
Purpose of the wireless equipment	Integration in the local WiFi network for data communication

11.2 Operating noise

The appliance makes different noises when it is on.

- At **higher temperatures** the appliance uses less energy but works for longer. It is **quieter**.
- With **high cooling capacity**, food is cooled more quickly. The sound is **louder**.

  Examples:
  - Functions on (see 8.2 Appliance functions)
  - Food recently added
  - High ambient temperature
  - Door open for a while

Noise	Possible cause	Type of noise
Bubbling and splashing	Coolant flowing into the cooling circuit.	Normal operating noise
Hissing	Coolant sprays into the cooling circuit.	Normal operating noise
Humming	The appliance is cooling. The volume depends on the cooling output.	Normal operating noise
Clicking	Components are switched on and off.	Normal switching noise
Rattling or humming	Valves or flaps are working.	Normal switching noise

Noise	Possible cause	Type of noise	Lifting
Vibration	Improper installation	Defective noise	Check the installation. Level the appliance.
Rattling	Components, items inside the appliance	Defective noise	Secure components. Leave enough space between the items.

11.3 Technical fault

Your appliance is designed and built to ensure it works reliably and has a long service life. In the unlikely event that a fault occurs during operation, please check whether it is due to an operating error. If so, you will be charged for the callout and repair costs even if it falls within the warranty period.
You can fix the following faults yourself.

11.3.1 Appliance function

Defect	Cause	Remedy
The appliance is not working.	→ The appliance is not switched on.	▶ Switch the appliance on.

Defect	Cause	Remedy
	→ The power plug is not properly plugged into the socket.	▶ Check the power plug.
	→ There is something wrong with the power outlet fuse.	▶ Check the fuse.
	→ Power cut	▶ Keep the appliance closed.
	→ The IEC socket is not plugged into the appliance correctly.	▶ Check the IEC socket.
Temperature is not cold enough.	→ The appliance door is not closed properly.	▶ Close the appliance door.
	→ Not enough ventilation.	▶ Keep ventilation grille clear, and clean it.
	→ The ambient temperature is too high.	▶ Problem solution: (see 1.8 Climate classes)
	→ The appliance was opened too many times or for too long.	▶ Wait to see if the required temperature corrects itself. If not, contact Customer Service. (see 11.4 Customer Service)
	→ The temperature is set incorrectly.	▶ Turn down the temperature and check after 24 hours.
	→ The appliance is too close to a heat source (oven, radiator, etc).	▶ Move the appliance or the heat source.
	→ The appliance was not correctly installed in the recess.	▶ Check if the appliance was installed correctly and that the door closes properly.

11.3.2 Features

Defect	Cause	Remedy
The internal light does not come on.	→ The appliance is not switched on.	▶ Switch the appliance on.
	→ The door was open for longer than 15 minutes.	▶ Interior lighting switches off automatically after about 15 minutes when the door is open.
	→ The LED interior light is faulty or the lid is damaged.	▶ Contact Customer Service. (see 11.4 Customer Service)

11.4 Customer Service

First check whether you can rectify the fault yourself (see 11 Customer help) . If you cannot rectify the problem, contact Customer Service.

You can find the address in the enclosed brochure “Liebherr-Service” or at home.liebherr.com/service.

WARNING

Unprofessional repair!
Injuries.

- ▶ Have any repairs and action - not expressly specified - on the appliance and mains cable carried out by service personnel only. (see 10 Maintenance)
- ▶ A damaged mains cable may only be replaced by the manufacturer, the manufacturer’s Customer Service or a similarly qualified person.
- ▶ In the case of appliances with an IEC connector, the change may be made by the customer.

11.4.1 Contacting Customer Service

Make sure that the following appliance information is available:

- ❑ Appliance designation (model and index)
- ❑ Service no. (Service)
- ❑ Serial no. (S no.)

▶ Call up the appliance information via the display. (see Device information)

-or-

▶ Refer to the type plate for appliance information. (see 11.5 Model plate)

▶ Note down the appliance information.
▶ Notify customer service: Report errors and the appliance information.
▷ This will help us to provide you with a faster, more accurate service.
▶ Follow further instructions from Customer Service.

11.5 Model plate

The type plate is located on the bottom inside of the machine.

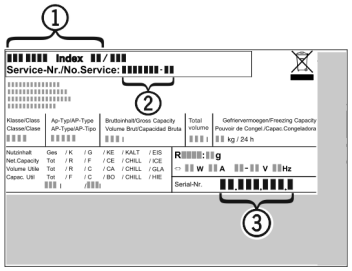

Fig. 137

(1) Appliance description **(3)** Serial no.
(2) Service no.

▶ Note the data on the model plate.

12 Shutting down

▶ Empty the appliance.
▶ Switch off appliance. (see Switching the appliance off and on)
▶ Pull the mains plug out of the socket.
▶ Remove the IEC socket if required: Pull the IEC socket out of the appliance plug and move it to the left and right at the same time.
▶ Clean appliance. (see 10.4 Cleaning the appliance)
▶ Leave the door open, so that no unpleasant odours arise.

13 Disposal

Ensure that the following requirements are met:

❑ Meaning of the symbols on the appliance: are familiar.
❑ Notes on disposal are familiar. (see 1.6 Information concerning disposal)

13.1 Preparing the appliance for disposal

▶ Shutting your appliance down. (see 12 Shutting down)

13.2 Disposing of the appliance in an environmentally friendly manner

WARNING
Risk of fire due to leaking refrigerant and oil!
The refrigerant inside the appliance is environmentally friendly, but flammable. The oil it contains is also flammable. Escaping refrigerant and oil can ignite in high concentrations and in contact with an external heat source.
▶ Do not damage the refrigerant circuit pipes or the compressor.

▶ Observe the notes on transporting the appliance. (see 3.5 Transporting the appliance)
▶ Remove the appliance without damaging it.
▶ Dispose of appliance according to specifications.

Scan QR Code and find digital operating and installation instructions.

home.liebherr.com

20261006 7083980-00

Liebherr-Hausgeräte GmbH
Memminger Straße 77-79
88416 Ochsenhausen
Deutschland