Operating and installation instructions

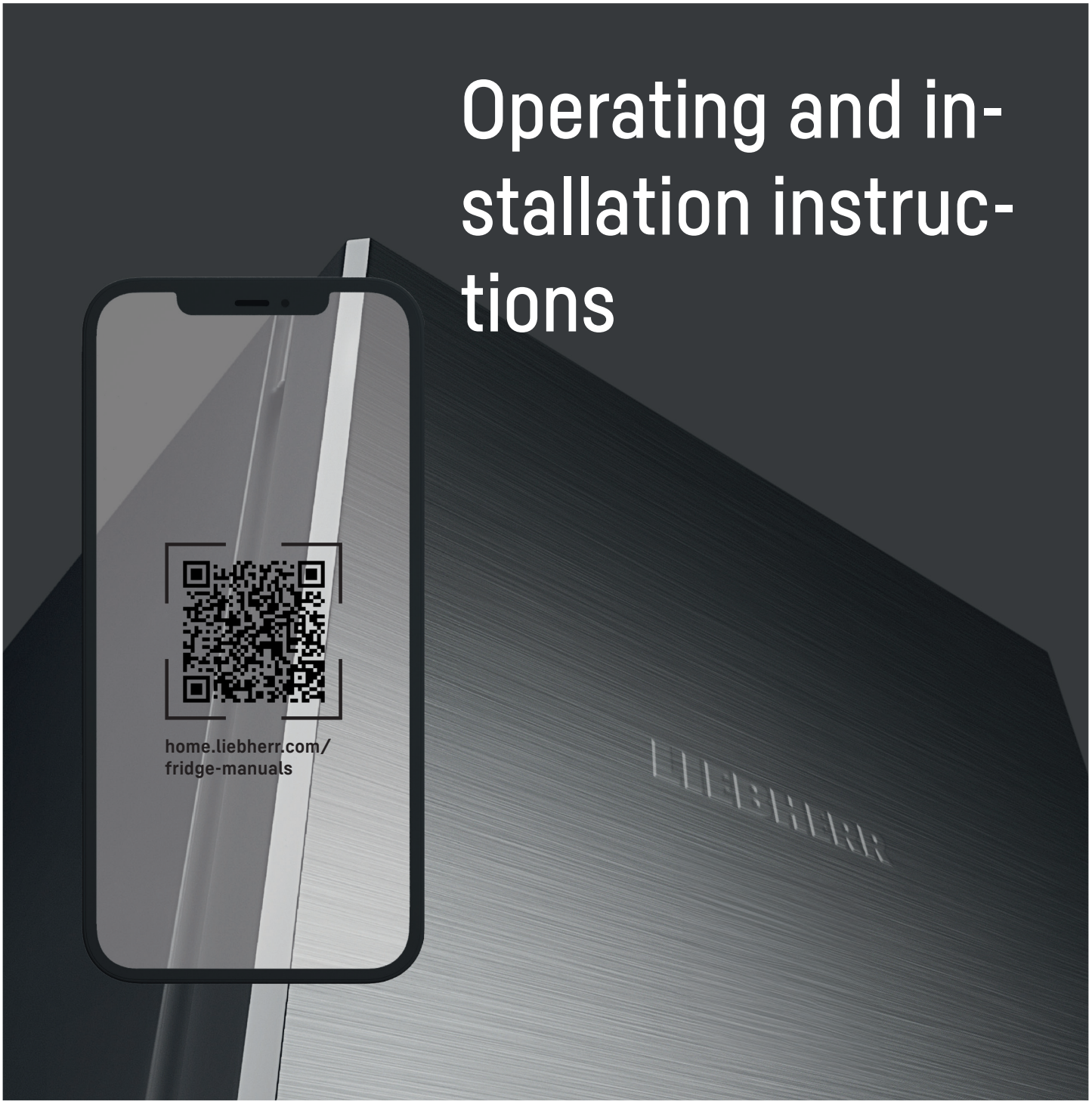

EN ORIGINAL OPERATOR'S MANUAL

LIEBHERR

Contents

1 General safety information ... 3
1.1 Intended use ... 3
1.2 Foreseeable erroneous use ... 3
1.3 User group ... 3
1.4 Warning notices – Risks for the user ... 3
1.5 Faults, damage and repairs ... 4
1.6 Information concerning disposal ... 4
1.7 Conformity ... 4
1.8 Climate classes ... 4
1.9 SVHC substances in accordance with the REACH Regulation ... 4
1.10 EPREL database ... 4
1.11 Open source licences ... 4
1.12 Spare parts ... 5
1.13 Warning levels ... 5

2 Appliance at a glance ... 5
2.1 Scope of delivery ... 5
2.2 Overview of appliances and equipment ... 5
2.3 SmartDevice ... 5

3 Setting up and connecting ... 6
3.1 Installation requirements ... 6
3.2 Appliance dimensions ... 6
3.3 Recess dimensions ... 7
3.4 Custom panel weights ... 8
3.5 Transporting the appliance ... 8
3.6 Unpacking the appliance ... 8
3.7 Removing the transport lock ... 8
3.8 Explanation of symbols used ... 8
3.9 Reversing the door ... 9
3.10 Installing multiple appliances ... 11
3.11 Installing the appliance in the recess ... 12
3.12 Unit fronts ... 18
3.13 After installation ... 19
3.14 Connecting the appliance to the power supply ... 19
3.15 Disposing of packaging ... 20

4 Functionality of the Touch & Swipe display ... 20
4.1 Navigation and symbol explanation ... 20
4.2 Menus ... 20
4.3 Sleep mode ... 21

5 Putting into operation ... 21
5.1 Switching on appliance (first use) ... 21

6 Storage ... 22
6.1 Information regarding storage ... 22
6.2 Freezer compartment ... 22
6.3 Storage times ... 23

7 Saving energy ... 23

8 Controls ... 23
8.1 Controls and displays ... 23
8.1.1 Status display ... 23
8.1.2 Display symbols ... 23
8.2 Appliance functions ... 23
8.2.1 Notes on the appliance functions ... 23
Switching the appliance off and on ... 23
Temperature ... 24
SuperFrost ... 24
PartyMode ... 25
SabbathMode ... 25
EnergySaver ... 26
Input lock ... 26
Language ... 26
Temperature unit ... 27
Display brightness ... 27
WiFi ... 27
Device information ... 28
Software ... 28
Start defrosting cycle ... 28
Door alarm ... 29
Demo mode ... 29
Resetting to factory settings ... 30
8.3 Messages ... 30
8.3.1 Overview of warnings ... 30
8.3.2 Ending warnings ... 31
8.3.3 Overview of reminders ... 31

9 Features ... 31
9.1 Drawers ... 31
9.2 Glass shelves ... 32
9.3 VarioSpace ... 33
9.4 Ice cube tray with cover ... 33

10 Maintenance ... 34
10.1 Disassembling / assembling pull-out systems ... 34
10.2 Defrosting the appliance ... 35
10.3 Cleaning the appliance ... 35

11 Customer help ... 35
11.1 Technical specifications ... 35
11.2 Operating noise ... 36
11.3 Technical fault ... 36
11.4 Customer Service ... 37
11.5 Model plate ... 37

12 Shutting down ... 38

13 Disposal ... 38
13.1 Preparing the appliance for disposal ... 38
13.2 Disposing of the appliance in an environmentally friendly manner ... 38

The manufacturer is continually working on the further development of all types and models. Please be aware that we reserve the right to make changes to the shape, equipment and technology.

Symbol	Explanation
	Read instructions Please read the information in these instructions carefully to understand all of the benefits of your new appliance.

*** Depending on model and options**

Symbol	Explanation
	Additional information on the Internet The digital manual with additional information and in other languages can be found via the QR code on the front of the manual or by entering the service number at **home.liebherr.com/fridge-manuals**. The service number can be found on the serial tag: 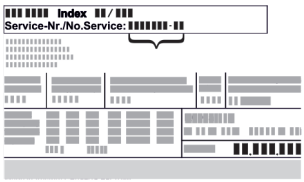 *Fig.* Example illustration
	Check appliance Check all parts for transport damage. If you have any complaints, please contact your agent or customer service.
	Differences These instructions apply to a range of models, so differences are possible. Sections that apply to certain models only are marked with an asterisk (*).
	Instructions and results Instructions are marked with a ▶. Results are marked with a ▷.
	Videos Videos about the appliances are available on the YouTube channels of Liebherr-Hausgeräte.

Open source licences:

The appliance contains software components that use open source licences. Information on the open source licences used can be found here: **home.liebherr.com/open-source-licences**

This user information applies to the following appliances:

IFN..	35.. / 39..
SIFN..	39.. / 41.. / 45.. / 51..

Note
If your appliance has an N in its appliance designation, it is a NoFrost appliance.

1 General safety information

Keep this user information in a safe place so that you can refer to it at any time.

If you pass on the appliance, pass this user information on to subsequent owners.

To use the appliance properly and safely, read this user information carefully before installation and use. Always follow the instructions, safety instructions and warnings contained therein. They are important so that you can install and operate the appliance safely and properly.

1.1 Intended use

- This appliance is intended for household use and similar applications such as:
  - in staff kitchen areas in shops, offices and other work areas
  - in agriculture and by guests in hotels, motels and other accommodation
  - bed and breakfasts
  - in catering and similar wholesale operations
- Further uses:
  - All other types of application are impermissible.

1.2 Foreseeable erroneous use

The following applications are expressly prohibited:

- Storage and cooling of:
  - Chemically unstable, flammable or corrosive substances
  - Explosive substances, such as aerosol containers with flammable propellant gas
  - Medication, blood plasma, laboratory compounds or similar substances and products subject to the Medical Device Directive 2007/47/EC
- Use in explosive areas

Improper use of the appliance will result in damage or spoilage of the stored foods.

1.3 User group

- This appliance must not be used by persons (including children) with reduced physical, sensory or mental capabilities, or by persons with a lack of experience and knowledge, unless they are supervised by a person responsible for their safety or have been given instructions on how to use the appliance. Children must be supervised to ensure that they do not play with the appliance.
- Children aged between 3 and 8 are allowed to load and unload the fridge-freezer.

1.4 Warning notices – Risks for the user

- WARNING: Keep ventilation openings in the equipment housing or in installations clear of obstructions.
- WARNING: Do not use any mechanical devices or other means to speed up the defrosting process other than those recommended by the manufacturer.
- WARNING: Do not damage the coolant circuit.
- WARNING: Do not operate electrical appliances inside the refrigerator/freezer compartment that are not of the type recommended by the manufacturer.
- WARNING: When installing the appliance, ensure that the mains lead is not trapped or damaged.
- WARNING: Do not place portable multiple sockets or power supply units at the rear of the appliance.

Once the appliance has been installed, it must still be possible to disconnect it from the mains.

- Accessible mains plug (above, below or next to the appliance)
- Tripping of the fuse in the building's electrical installation in accordance with the installation regulations.

WARNING: Fire hazard/flammable substances.

The symbol is located on the compressor and may also appear in other places on the appliance. It marks the danger posed by flammable substances. Do not remove the sticker.

- The more refrigerant there is in the appliance, the larger than room must be in which it is located. In rooms that are too small, a leak can product a flammable gas/air

mixture. For every 8 g of refrigerant, the installation room must be at least 1 m^3 in size. Information on the refrigerant contained is given on the type plate inside the appliance.
- Clean regularly surfaces that can come in contact with food and accessible drainage systems.
- Package raw meat or fish in clean, closed containers. This will prevent meat or fish from touching or dripping onto other food.
- If the fridge-freezer is left empty for a long period, switch it off, defrost it, clean it, dry it and leave the door open to prevent mould from forming.
- Avoid prolonged skin contact with cold surfaces or with cold food. Use gloves for protection, for example.
- Alcoholic beverages and other containers bearing alcohol must be sealed tight for storage. Any leaking alcohol may ignite due to electrical parts.
- Only open the door for a short time. This prevents the temperature inside the appliance from rising.
- Do not reach between the door and the appliance when opening and closing. Fingers may become trapped.
- WARNING: This appliance must be secured in accordance with the instruction manual to prevent any risks arising from a lack of stability.
- Follow the instructions regarding installation, fixing, required dimensions and connections. (see 3 Setting up and connecting)

1.5 Faults, damage and repairs

- Mains connection with cooling appliance plug:
  If the mains lead of this appliance is damaged, it must be replaced with a special connection line available from the manufacturer or its customer service department. The customer may make the change.
- Repairs and interventions on the appliance may only be carried out by the customer service or by other qualified personnel trained for this purpose.
- In the event of malfunctions and appliance faults, pull out the mains plug or switch off the fuse. Always hold the plug when pulling out the mains plug. Never tug on the cable.

1.6 Information concerning disposal

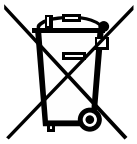

The crossed-out rubbish bin symbol is a note that the appliance must not be disposed of with unsorted household waste and must be placed in a separate collection. It contains recyclable materials and may be reusable.

The symbol may be found on the compressor. It pertains to the oil in the compressor and indicates the following danger: **Can be fatal if swallowed or with penetration of the respiratory tract.** This information is only significant for recycling. No risk exists with normal use.

This or a similar sticker may be on the rear of the appliance. It indicates that there are vacuum insulation panels (VIP) or perlite panels in the door and/or housing. This information is only significant for recycling. Do not remove the sticker.

- The old appliance must be properly and therefore professionally disposed of in accordance with the local applicable regulations and legislation. When transporting the old appliance do not damage the refrigerant circuit, so that the refrigerant inside (information on the type plate) and the oil do not leak out uncontrolled.
- Please note that it is the customer's responsibility to delete any personal data that may be held.
- For Germany: The appliance can be disposed of free of charge via the class 1 collection containers at the local recycling/reusable material centres. When purchasing a new refrigerator/freezer and a sales area > 400 m^2, the old appliance is also taken back free of charge via the trade.
- EU: Please check with your local authorities to find out how to dispose of old appliances.

1.7 Conformity

The coolant circuit has been tested for leak-tightness. When installed, the appliance complies with the relevant safety regulations and directives.

For the EU market:	The appliance complies with Directive 2014/53/EU.
For GB market:	The appliance complies with the Radio Equipment Regulations 2017 SI 2017 No. 1206.

The full text of the EU Declaration of Conformity is available at the following web address: www.liebherr.com

1.8 Climate classes

Depending on its climate class, the appliance is designed for operation within certain ambient temperature limits. The climate class for your appliance is printed on the type plate.

Note

▶ In order to guarantee fault-free operation comply with the specified ambient temperatures.

Climate class	for ambient temperatures from
SN	10 °C to 32 °C
N	16 °C to 32 °C
ST	16 °C to 38 °C
T	16 °C to 43 °C
SN-ST	10 °C to 38 °C
SN-T	10 °C to 43 °C

1.9 SVHC substances in accordance with the REACH Regulation

- You can use the following link to check whether your appliance contains SVHC substances in accordance with the REACH Regulation:
  https://go.liebherr.com/z3eewm

1.10 EPREL database

- From 1 March 2021, the information on energy labelling and eco-design requirements will be available in the European product database (EPREL). The product database can be accessed via the following link https://eprel.ec.europa.eu/. Here, you are asked to enter the model identifier. You will find the model identifier on the type plate.

1.11 Open source licences

- The appliance contains software components that use open source licences. Information on the open source licences used can be found here:

home.liebherr.com/open-source-licences

1.12 Spare parts

- The spare parts availability for functional parts and stockable parts of the equipment is 15 years.

1.13 Warning levels

⚠ **DANGER**	Identifies an immediately dangerous situation that will result in death or serious bodily injuries if it is not prevented.
⚠ **WARNING**	Identifies a dangerous situation that could result in death or serious bodily injury if it is not prevented.
⚠ **CAUTION**	Identifies an immediately dangerous situation that could result in slight or moderate injuries if it is not prevented.
ATTENTION	Identifies a hazardous situation that could result in property damage if it is not prevented.
Note	Identifies useful information and tips.

2 Appliance at a glance

2.1 Scope of delivery

Check all parts for transport damage. Contact your dealer or customer service in the event of complaints. (see 11.4 Customer Service)

Your new appliance comes with the following parts:
- Built-in appliance
- Features (depending on the model)
- Installation materials (depending on the model)
- “Quick Start Guide”
- “Installation Guide”*
- Service Brochure

2.2 Overview of appliances and equipment

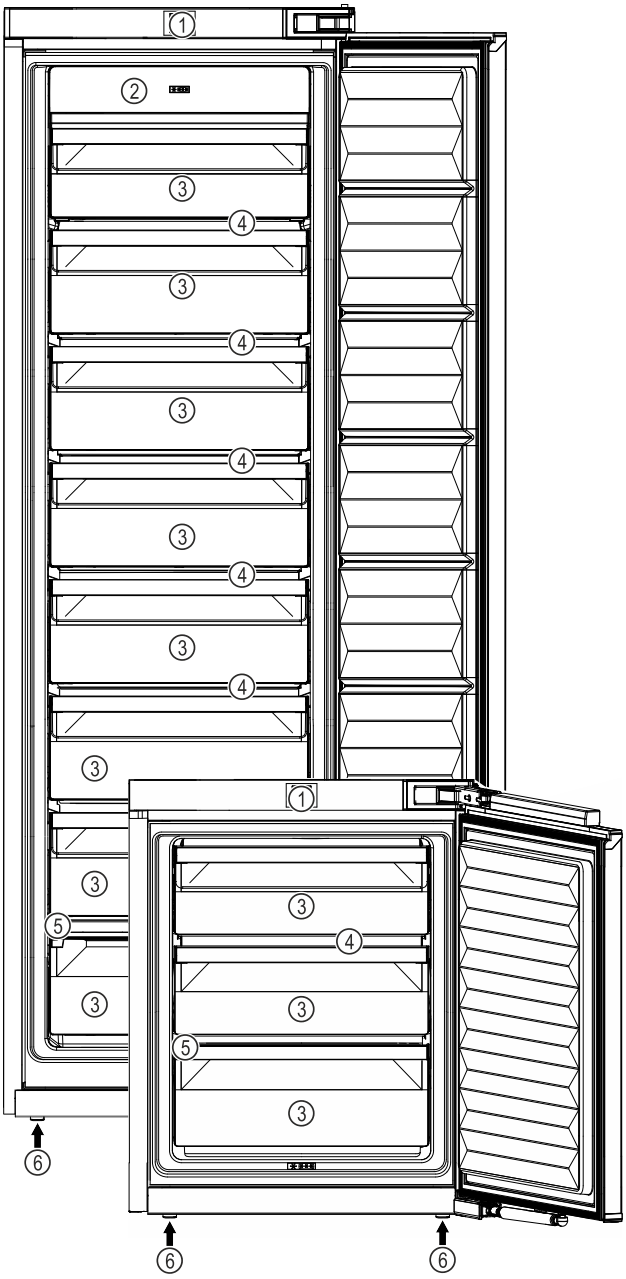

Fig. 1 Example illustration

(1) Controls
(2) NoFrost
(3) Drawer
(4) VarioSpace
(5) Type plate
(6) Adjustable foot

2.3 SmartDevice

SmartDevice is the networking solution for your freezer.

If your appliance SmartDevice-enabled or compatible, you can quickly and easily connect your appliance to your WiFi. With the SmartDevice app, you can operate your appliance from a mobile device. Additional functions and setting options are available in the SmartDevice SmartDevice app.

SmartDevice-enabled appliance:	Your appliance is capable of being a SmartDevice. To be able to connect your device to WiFi, you need to download the SmartDevice app.

More information about SmartDevice: **smartdevice.liebherr.com**

Downloading the SmartDevice app:

After installing and configuring the SmartDevice app, you can connect your appliance to your Wi-Fi (see WiFi) using the SmartDevice app and the appliance's Wi-Fi function.

Note
The SmartDevice function is not available in the following countries: Russia, Belarus, Kazakhstan.

3 Setting up and connecting

3.1 Installation requirements

The installation conditions are crucial to ensure that you can operate your appliance safely, efficiently and without problems.

- Observe all safety instructions.
- Consider the location and position in the room.

WARNING
Danger of fire due to incorrect positioning!
If the mains cable or plug touches the back of the appliance, the vibration can damage the mains cable or the plug resulting in a short circuit.

▶ Make sure the mains cable is not trapped under the appliance when you position the appliance.
▶ Stand the appliance so that it is not touched by connectors or main cables.
▶ Do not connect any appliances to sockets in the area of the back of the appliance.
▶ Do **not** place and operate multi-sockets/power distributors and other electronic devices (such as halogen transformers) at the back of the appliances.

WARNING
Fire hazard due to dampness!
If live parts or the mains lead become damp this may cause short circuits.

▶ The appliance is designed for use in enclosed areas. Do not operate the appliance outdoors or in areas where it is exposed to splash water or damp conditions.

WARNING
Risk of fire due to leaking refrigerant and oil!
The refrigerant inside the appliance is environmentally friendly, but flammable. The oil it contains is also flammable. Escaping refrigerant and oil can ignite in high concentrations and in contact with an external heat source.

▶ Do not damage the refrigerant circuit pipes or the compressor.

3.1.1 Installation site

- Only set up and use the appliance in enclosed spaces.
- Only operate the appliance when it is installed.
- If the appliance is installed in a very damp environment, condensation may form on the appliance exterior. Always make sure there is good ventilation and aeration at the installation site.
- The more refrigerant there is in the appliance, the larger than room must be in which it is located. In rooms that are too small, a leak can product a flammable gas/air mixture. For every 8 g of refrigerant, the installation room must be at least 1 m^3 in size. Information on the refrigerant contained is given on the type plate inside the appliance.
- The floor on which the appliance stands must be horizontal and level.

3.1.2 Position in space

- Do not install the appliance in direct sunlight or near radiators or similar sources of heat.
- You can install the appliance directly next to an oven.
- If the appliance is installed directly next to an oven, the energy consumption may increase slightly. This is dependent on the service life and usage intensity of the oven.
- Only fit the appliance into solid units.
- Use in hazardous areas is not permitted.

3.2 Appliance dimensions

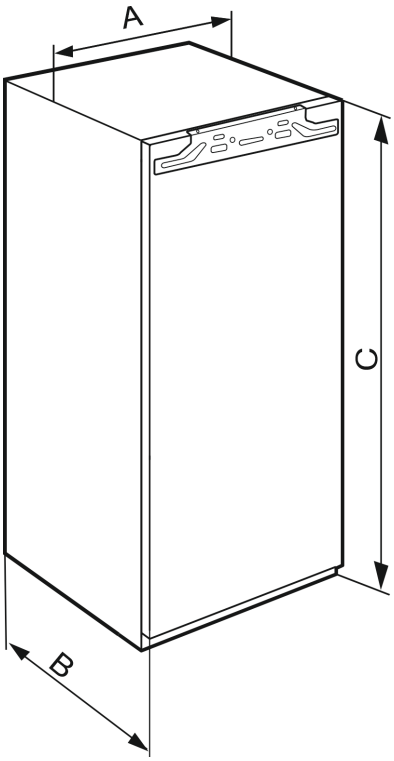

Fig. 2

IFN..(i) 35..	
A (mm)	559
B (mm)	546
C (mm)	712

Niche height 720 - single-door appliances

IFN..(i) 39.. / IR..(i) 39.. / SIBa20i 3905 / SIFN..i 39..	
A (mm)	559
B (mm)	546

*** Depending on model and options**

IFN..(i) 39.. / IR..(i) 39.. / SIBa20i 3905 / SIFN..i 39..	
C (mm)	872

Niche height 880 - single-door appliances

IR(B)..(i) 41.. / IRBbsbi 4170 / SIFN..i 41..	
A (mm)	559
B (mm)	546
C (mm)	1213

Niche height 1220 - single-door appliances

IR(B)..(i) 45.. / IRBbsbi 4570 / SIFN..i 45..	
A (mm)	559
B (mm)	546
C (mm)	1395

Niche height 1400 - single-door appliances

IR(B)(P)..(i) 51.. / IRD..i 51.. / IRBbsci 5170 / IRBbsci 5171 / IRBPbsci 5170 / IKB 51Vc50i / IKB 51Vc51i / IK 51Ve00 / IK 51Ve01 / IK 51Vd00 / SIFN..(i) 51.. / SIFNbsdi 51.. / IK(B).. 1780 / IK(B).. 1784 / SIGN 51Vd28	
A (mm)	559
B (mm)	546
C (mm)	1770

Niche height 1780 - single-door appliances

3.3 Recess dimensions

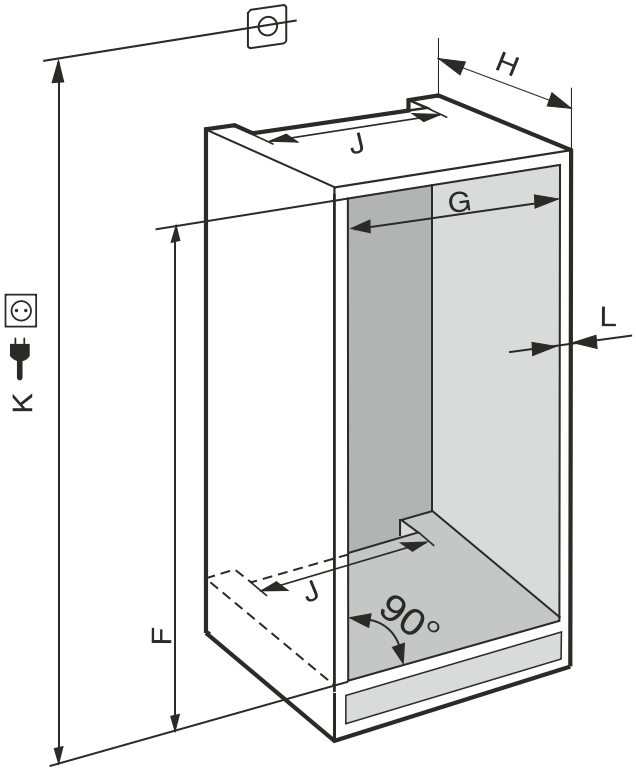

Fig. 3 ***(K):*** *max. 2100 mm*

Observe the following information for devices with a fixed water connection:

- Water connection
- Connecting the device to the water supply

IFN..(i) 35..	
F (mm)	714 to 730
G (mm)	560 to 570
H (mm)	min. 550, recommended 560
J (mm)	min. 500
L (mm)	max. 19

IFN..(i) 39.. / IR..(i) 39.. / SIBa20i 3905 / SIFN..i 39..	
F (mm)	874 to 890
G (mm)	560 to 570
H (mm)	min. 550, recommended 560
J (mm)	min. 500
L (mm)	max. 19

IR(B)..(i) 41.. / IRBbsbi 4170 / SIFN..i 41..	
F (mm)	1216 to 1236
G (mm)	560 to 570
H (mm)	min. 550, recommended 560
J (mm)	min. 500
L (mm)	max. 19

IR(B)..(i) 45.. / IRBbsbi 4570 / SIFN..i 45..	
F (mm)	1397 to 1413
G (mm)	560 to 570
H (mm)	min. 550, recommended 560
J (mm)	min. 500
L (mm)	max. 19

IC(B)(N)..(i) 51.. / ICBNbsci 5173 / IKG 51Ve03 / IKGN 51Vc03 / ICNbsci 5173 / IKGN 51Ve03 / IKGBN 51Vd23i / IR(B)(P)..(i) 51.. / IRD..i 51.. / IRBbsci 5170 / IRBbsci 5171 / IRBPbsci 5170 / IKB 51Vc50i / IKB 51Vc51i / IK 51Vd00 / IK 51Ve00 / IK 51Ve01 / IK(B).. 1780 / IK(B).. 1784 / IKGNc 1783 / SICN..i 51.. / SIFN..(i) 51.. / SIFNbsdi 51.. / SIGN 51Vd28 / IC(B)Ndx 5173	
F (mm)	1772 to 1788
G (mm)	560 to 570
H (mm)	min. 550, recommended 560
J (mm)	min. 500
L (mm)	max. 19

The specified energy consumption was determined with a kitchen unit depth of 560 mm. The appliance will work properly at a kitchen unit depth of 550 mm, but with a slightly higher energy consumption.

▶ Check the wall thickness of adjacent cabinets: They must have a minimum of 16 mm .

▶ Only fit the appliance into stable, solid kitchen units. Secure the unit against tipping.

▶ Align the cabinets with a spirit level and a try square. If necessary, level them by putting something underneath them.

▶ Make sure floor and the side panels of the cabinet are at right angles to each other.

3.3.1 Ventilation requirements

NOTICE
Covered vents!
Damage. Appliance can overheat, which can reduce the service life of various parts of the appliance and lead to operational impairments.
▶ Always make sure there is good ventilation.
▶ Always keep vents or ventilation grids in the appliance housing and in the kitchen furniture (fully integrated appliance) unobstructed.
▶ Always keep the fan air vents unobstructed.

Always follow the required ventilation gaps:
- The depth of the ventilation shaft at the back of the cabinet must be at least 38 mm.
- At least 200 cm^2 is required for the ventilation gap cross sections in the plinth and the housing cabinet.
- As a rule, the larger the ventilation cross-section, the more efficiently the appliance will run.

Sufficient ventilation is required for the operation of the appliance. The ventilation grids provided ensure an effective ventilation cross-section on the appliance of 200 cm^2. If you replace the ventilation grids with a cover plate the ventilation cross-section must be as least as large as the ventilation grid provided by the manufacturer.

3.4 Custom panel weights

NOTICE
An excessively heavy custom panel can potentially cause damage!
If the custom panel is too heavy, damage to the hinges cannot be ruled out, which may compromise the functionality of the unit.
▶ Before fitting the custom panel, ensure the custom panel does not exceed the permissible weight.

Recess height (mm)	Maximum weight of custom panel (kg)
720	16
880	16
1020	13
1220	19
1400	21
1580	22
1780	26

Single-door fridges and freezers

3.5 Transporting the appliance

3.5.1 Transporting the appliance for initial use

Ensure that the following requirements are met:
❑ The appliance is packaged.
❑ The appliance is upright.

▶ Transport the appliance with the help of two people.
▶ Unpacking the appliance. (see 3.6 Unpacking the appliance)

3.5.2 Transporting the appliance after initial use

Observe the following instructions if you wish to transport or move the appliance again after initial use.

Ensure that the following requirements are met:
❑ The appliance is emptied.
❑ The appliance is upright.
❑ Appliance with door(s): Door is secured against accidental opening.
❑ Appliance with telescopic unit: The telescopic unit is secured against accidental opening.
❑ Appliance is removed.

▶ Transport the appliance with the help of two people.

3.6 Unpacking the appliance

NOTICE
Risk of damage if the unit is moved!
If you move the unit across the floor without any protection, it may damage the floor.
▶ Make sure you cover the floor properly before removing the packaging from the unit.

▶ Check the appliance and packaging: If you suspect that the goods have been damaged in transit, please contact the supplier before connecting them.

NOTICE
Damage to property caused by pointed or sharp objects!
Using pointed or sharp objects when removing packaging material may damage the appliance.
▶ Do not use any pointed or sharp objects to remove the packaging material.

▶ Remove the packaging materials.

3.7 Removing the transport lock

▶ Remove the transport lock from the appliance door.

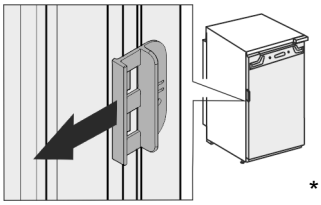

*

3.8 Explanation of symbols used

	There is a danger of injury during this step! Observe the safety instructions!
	The instruction is valid for several models. Only perform this step if it applies to your appliance.
	For installation, please refer to the detailed description in the text section of the instructions.
	Section is valid for either a single-door appliance or a double-door appliance.
	Choose between the following options: Appliance with door hinge on the right or appliance with door hinge on the left.

* Depending on model and options

	Installation step required for IceMaker and/or InfinitySpring.
	Only loosen or lightly tighten the screws.
	firmly tighten the screws.
	Check whether the following step is necessary for your model.
	Check that the components used are correctly installed/fitted.
	Measure the specified dimension and correct if necessary.
	Tool for installation: Metre stick
TORX® 20	Tool for installation: Cordless screwdriver and use A lengthwise bit insert is recommended for good access to the screws.
	Tool for installation: Spirit level
SW7 SW10	Tool for installation: Open-end wrench with AF 7 and AF 10
	Two people are required for this step.
	The step takes place at the marked location on the appliance.
	Aid for installation: String
	Aid for installation: Protractor
	Aid for installation: Screwdriver
	Aid for installation: Scissors
	Aid for installation: Marking pen, wipeable
	Included: Remove components
	Dispose of components that are no longer required in accordance with local regulations.

3.9 Reversing the door

Tool

Fig. 4

NOTICE
Live parts!
Damage to electrical components.
▶ Remove the mains plug before you reverse the door.

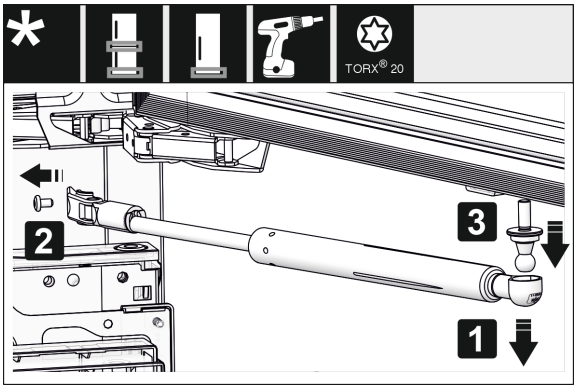

Fig. 5

▶ Removing the soft stop damper: Remove the soft stop damper from the ball stud (1). Unscrew the retainer (2). Remove the ball stud with a screwdriver (3).

Note
If the closing damper is only slightly above the floor, you can only remove the ball pins when the door is removed.

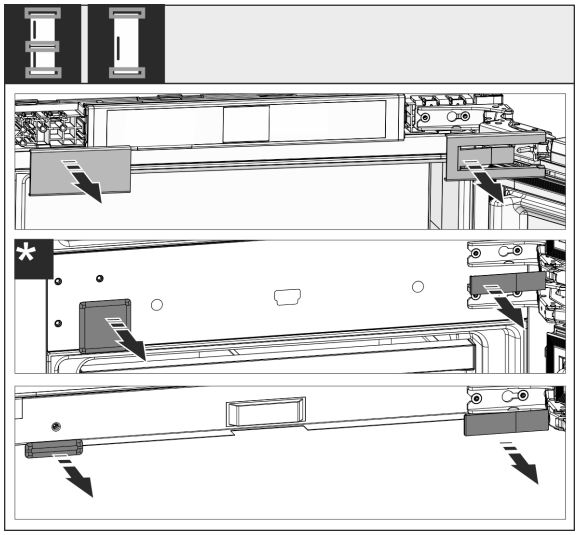

Fig. 6

▶ Remove covers.

Note
When removing the covers, ensure that the surface does not get scratched.

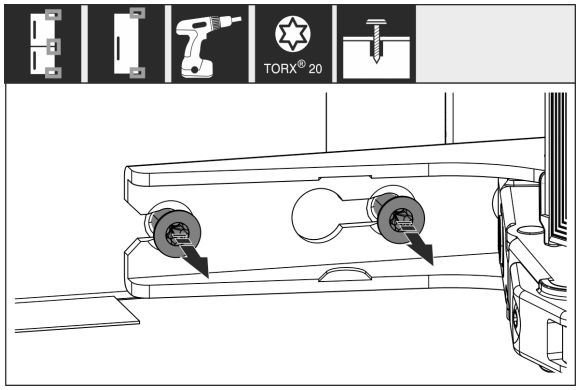

Fig. 7

▶ Loosen the screws on **all** hinges but do not remove them.

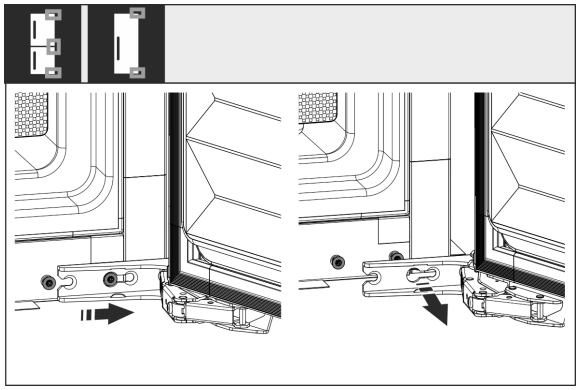

*Fig. 8 **

▶ Removing the door: Push the door forward and then out, unhang it and put it to one side.

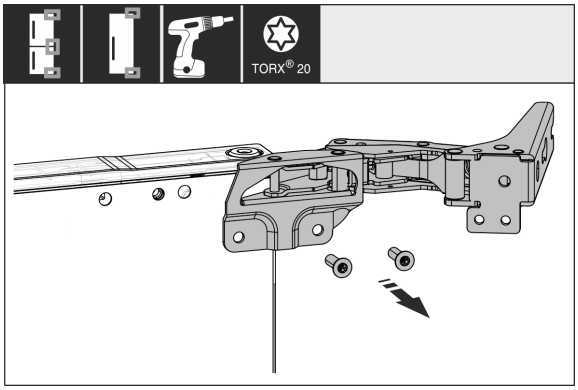

Fig. 9

▶ Unscrew all hinges and set aside together with the screws.

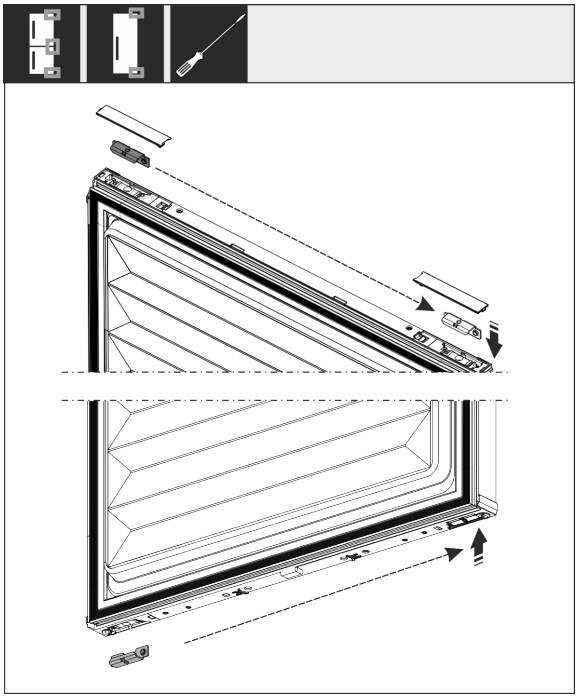

Fig. 10

▶ Loosen and shift the bracket at the top and bottom of the door. The bracket must be shifted so you can screw on the hinges.

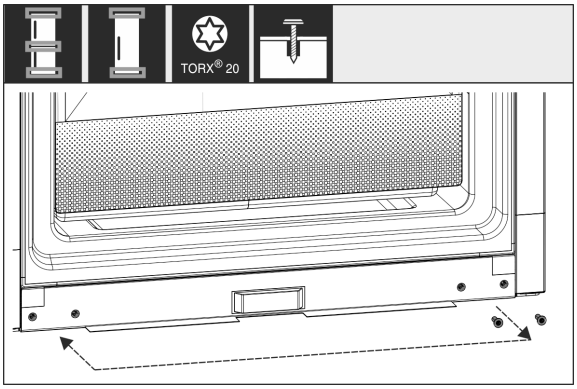

Fig. 11

▶ Shift the screws to fasten the hinge. Do not screw tightly after shifting – you need to hang the hinges later.

*** Depending on model and options**

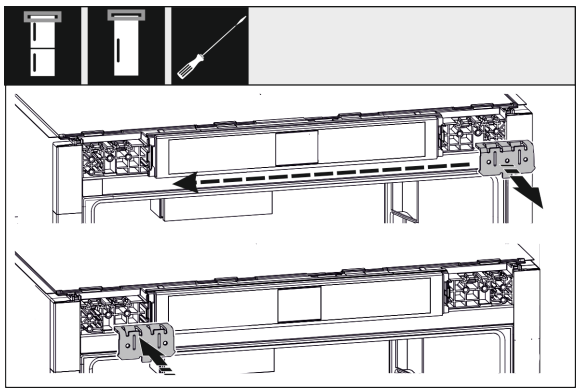

Fig. 12

▶ Move the fixing bracket to the opposite side.

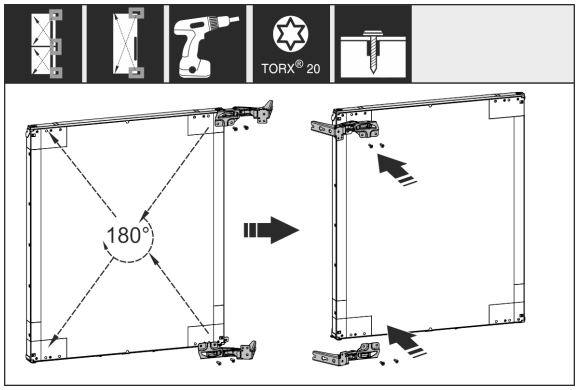

Fig. 13

▶ Turn all hinges 180° to the opposite side and screw firmly.

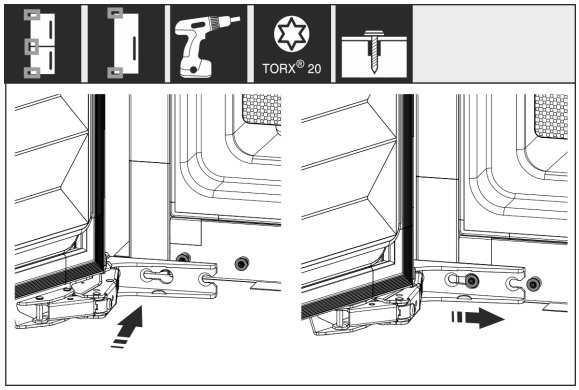

*Fig. 14 **

▶ Refitting the door: Hang the door with its hinges and tighten the screws.

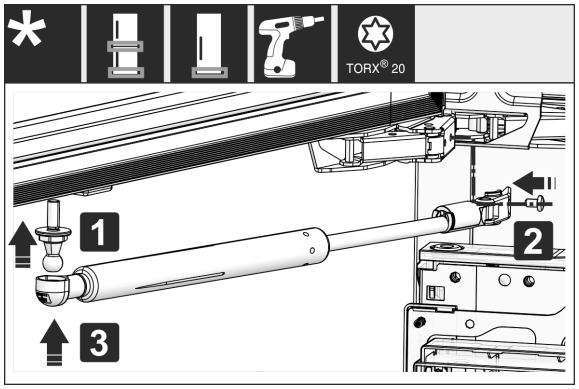

Fig. 15

▶ Refitting the closing dampers: Screw in the ball studs (1), tighten the bracket (2) and hang the closing dampers in the ball studs.

▶ Check all screws and retighten if necessary.

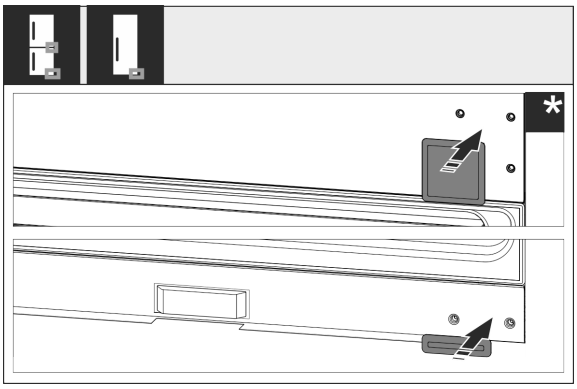

Fig. 16

▶ Reassemble the bottom and centre cover. Only replace the remaining covers after installing the appliance back into the cabinet.

3.10 Installing multiple appliances

The appliances have been developed for different installation methods. If you wish to install several appliances next to each other or on top of each other, ensure that the following requirements are met:

- ❑ Only install appliances next to or on top of each other if they have been developed for this.
- ❑ Observe notices and the following table.

NOTICE
Risk of damage due to condensate!

▶ Do not place the appliance directly next to another cooling/refrigeration unit.

NOTICE
Risk of damage due to condensation!

▶ Do not place the appliance directly on top of another cooling/refrigeration unit.

Model	Installation method
All models	Standalone
Models with a model designation starting with **S...**.	Side-by-Side (SBS)
Models up to a maximum niche height of 880 mm and with a heated ceiling can be installed “on top of each other”. Top appliance: up to a maximum niche height of 140 mm	On top of each other

Models and their installation method

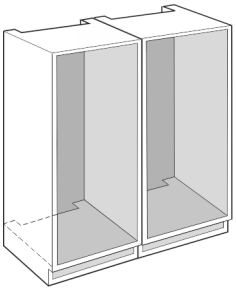

Fig. 17

Install each appliance into a separate unit niche.

3.11 Installing the appliance in the recess

Tool

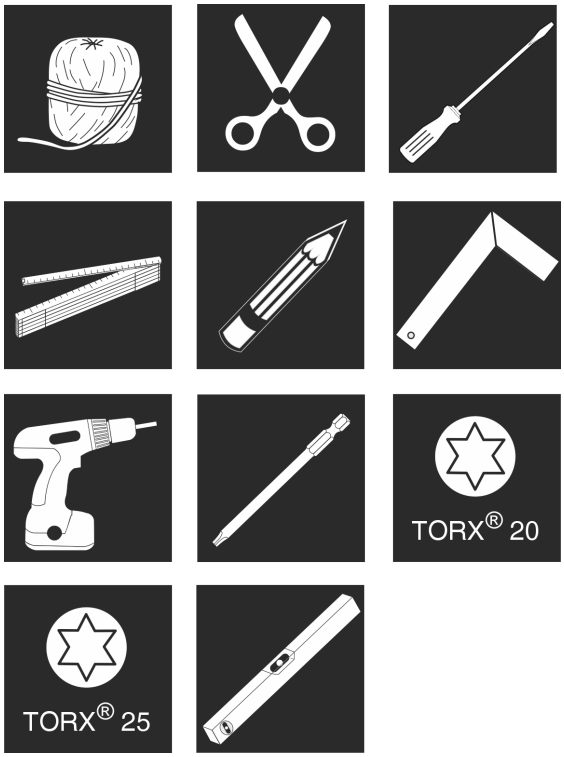

Fig. 18

Supplied assembly parts

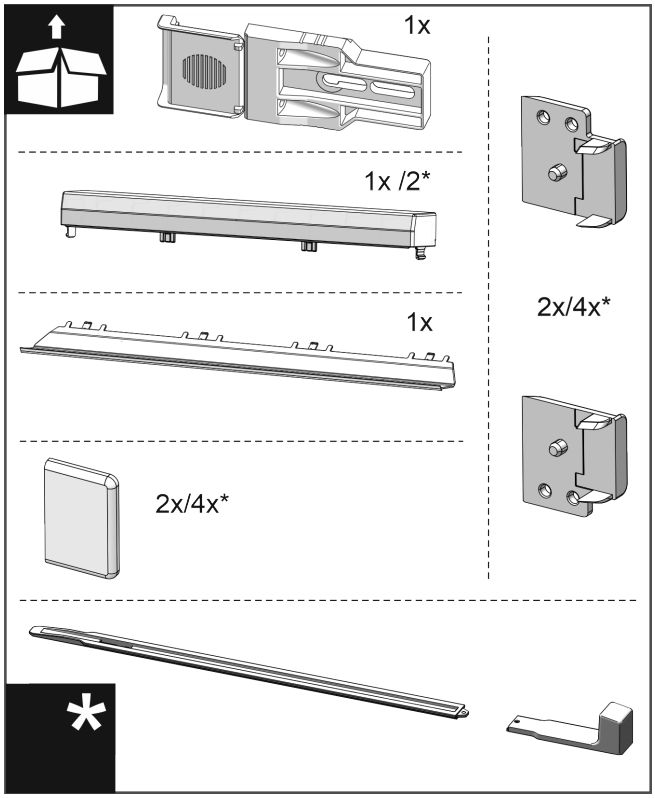

Fig. 19

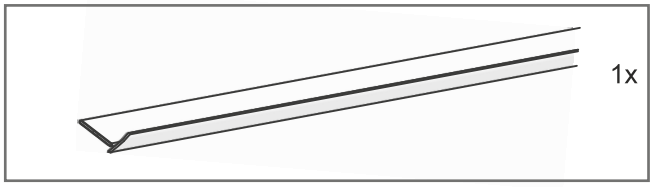

Fig. 20

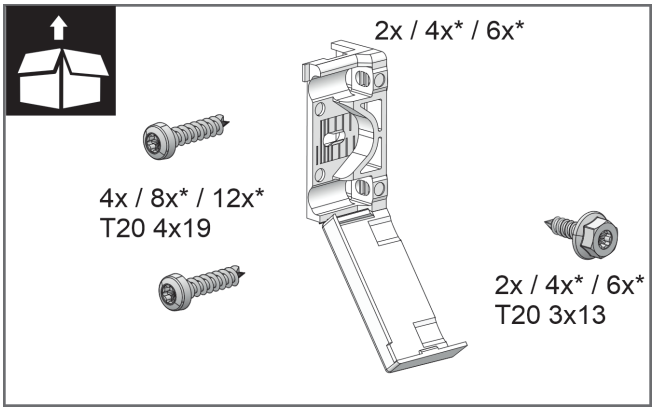

Fig. 21

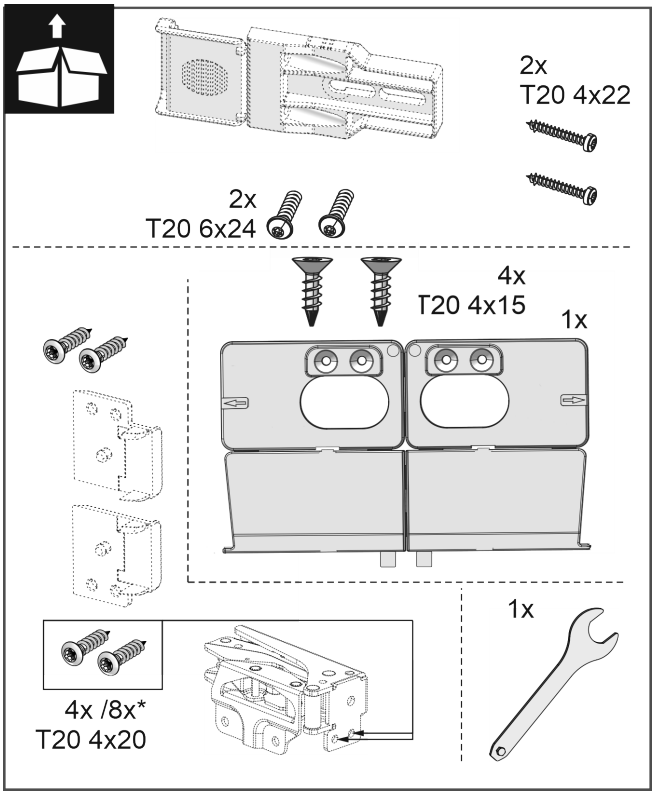

Fig. 22

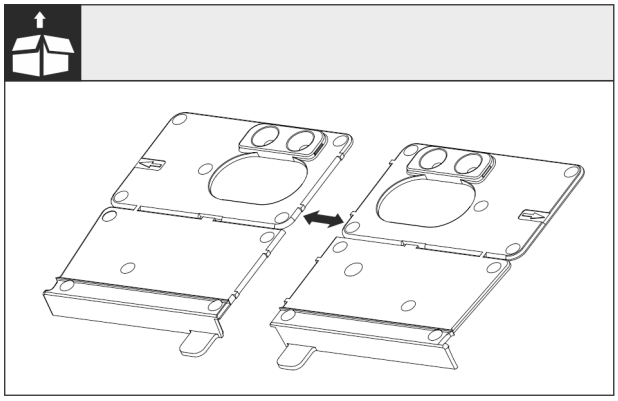

*** Depending on model and options**

Fig. 23

▶ Disconnect the base installation bracket at the perforation.

NOTICE

Correct installation depth of the appliance.

▶ Using the mounting bracket ensures the correct installation depth of the appliance.

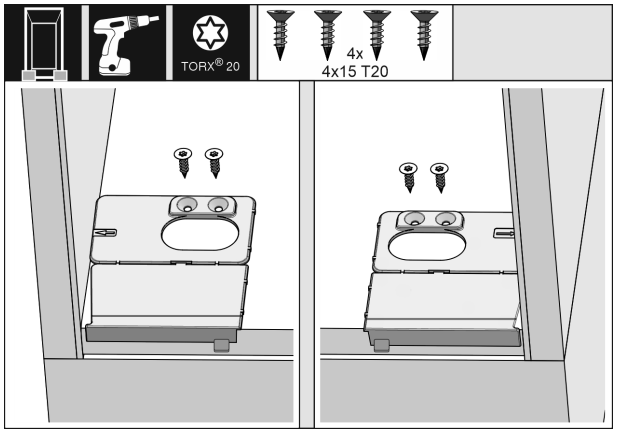

Fig. 24

▶ Screw the mounting brackets on the left and right of the recess floor, flush to the side wall.

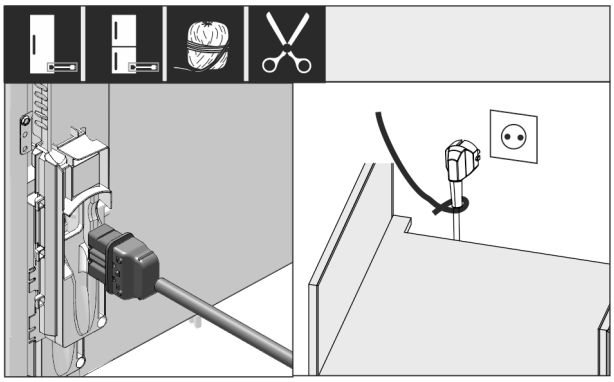

Fig. 25

▶ Remove the mains cable from the package.

▶ Plug the mains cable's IEC socket completely into the appliance plug on the back of the appliance. Ensure that the IEC socket is tight.

▶ Use a cord to lay the mains plug to a freely accessible socket.

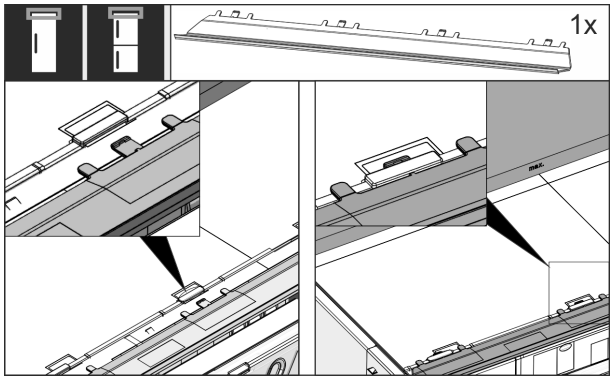

Fig. 26

▶ Insert the adapter panel on the top of the appliance. The panel can be moved to both sides.

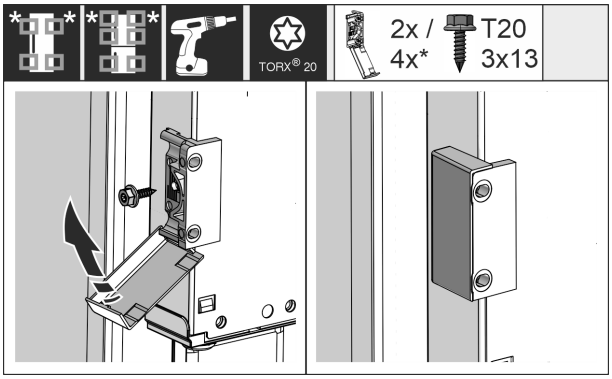

Fig. 27

▶ Fit the mounting bracket. Attach the mounting bracket at the height of the custom door panel handle. For a large door, use four mounting brackets.

▶ After assembly, fold the covers onto the bracket.

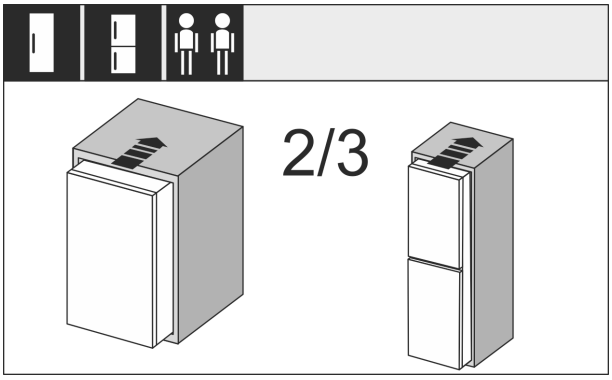

Fig. 28

▶ Insert the appliance 2/3 of the way into the recess.

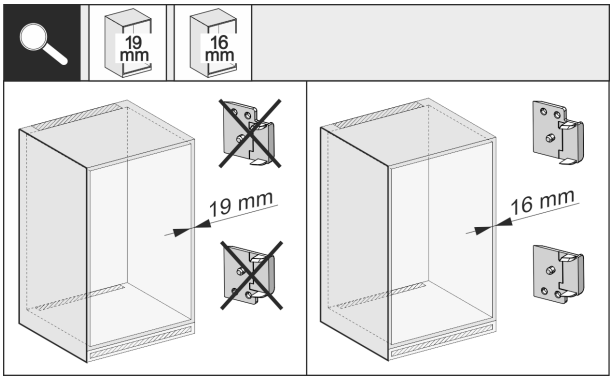

Fig. 29

▶ Check whether the unit side wall is 16 mm or 19 mm thick.

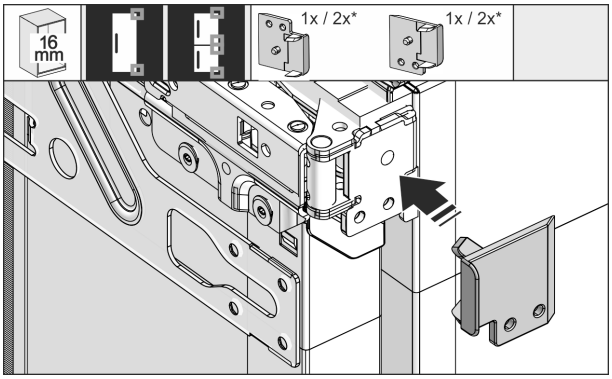

Fig. 30

▶ 16 mm thick unit side walls: Put a spacer on all hinges.

▶ 19 mm thick unit side walls: You do not need a spacer.

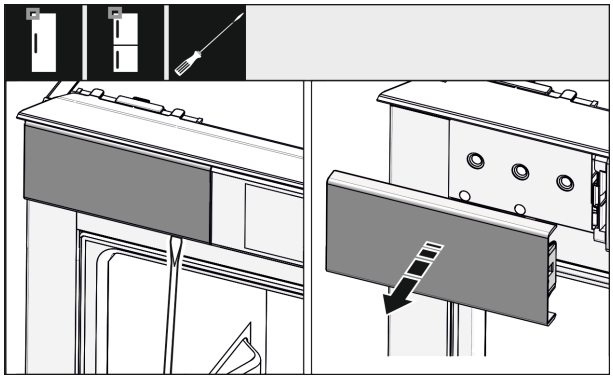

Fig. 31

▶ Use a screwdriver to loosen the cover at the top left and remove it.

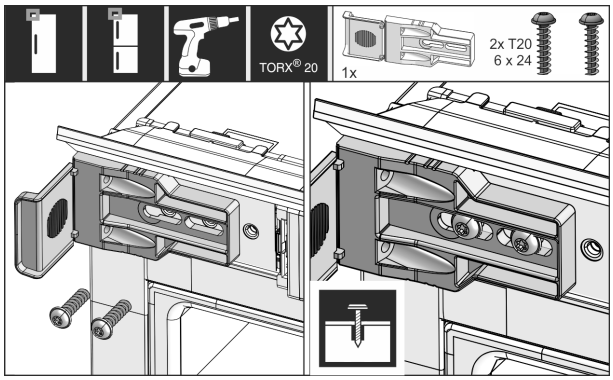

Fig. 32

▶ Loosely tighten the mounting bracket screw. The bracket should still be easy to move.

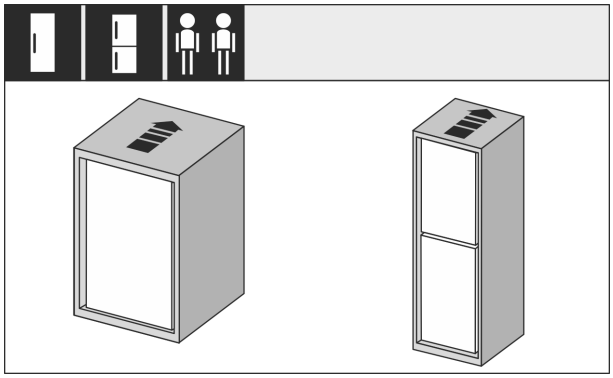

Fig. 33

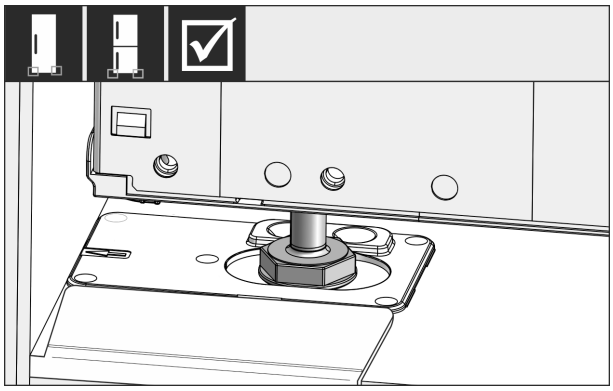

Fig. 34

WARNING

Risk of fire due to short circuit!

▶ When you push the appliance into the niche: do not kink, jam or damage the mains cable.

▶ The appliance must not be operated with a defective mains cable.

▶ Push the appliance all the way into the unit recess. The adjustable feet must rest in the recesses in the brackets on both sides.

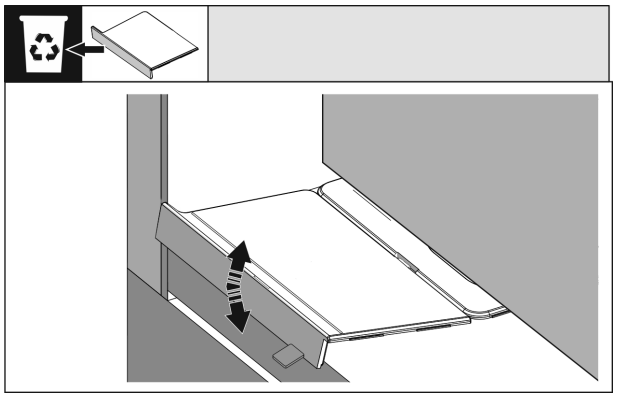

Fig. 35

▶ Remove the floor mounting bracket stopper. Loosen the stopper by moving it and, if necessary, pull it off using pliers.

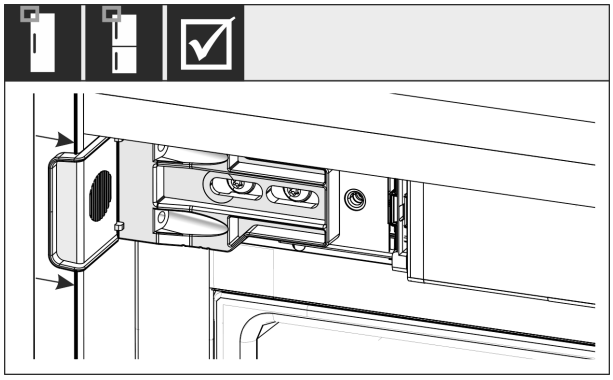

Fig. 36

▶ Check that the appliance is flush in the cabinet recess. The mounting bracket must be attached to the side wall of the cabinet recess.

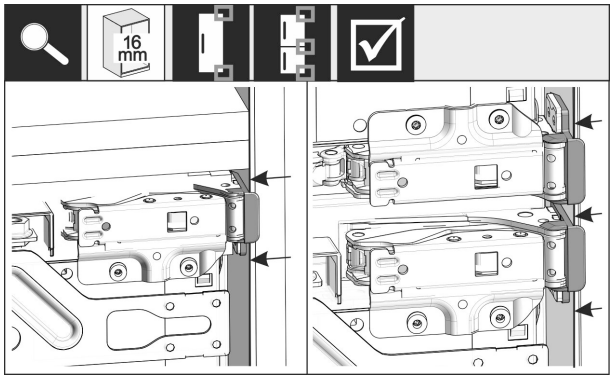

Fig. 37

Note

With 16 mm unit side walls, the spacers fit against the unit recess on the hinge side.

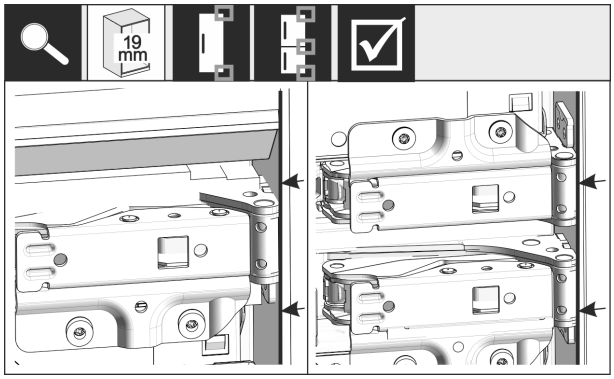

Fig. 38

▶ 19 mm thick unit side walls: Align the front of the hinges flush with the unit side wall.

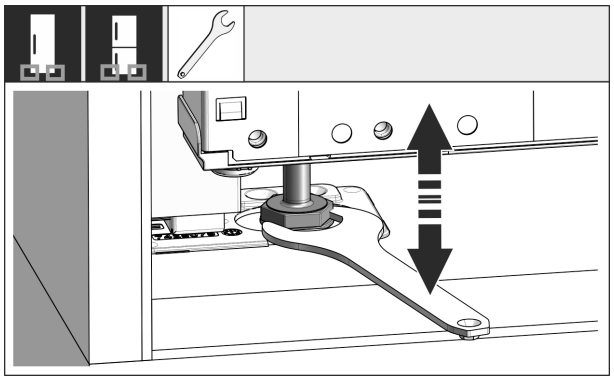

Fig. 39

▶ If necessary, use the adjustable feet to correct the tilt of the appliance.

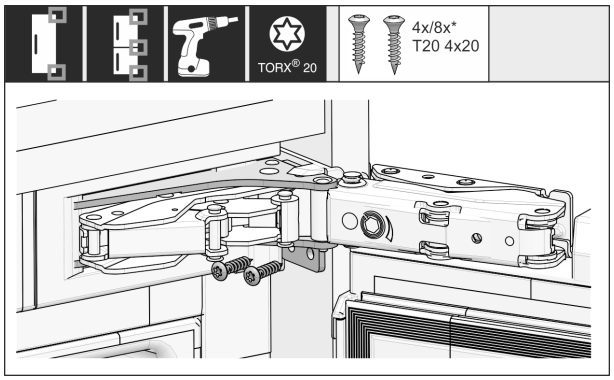

Fig. 40

▶ Screw on the appliance on the hinge side.

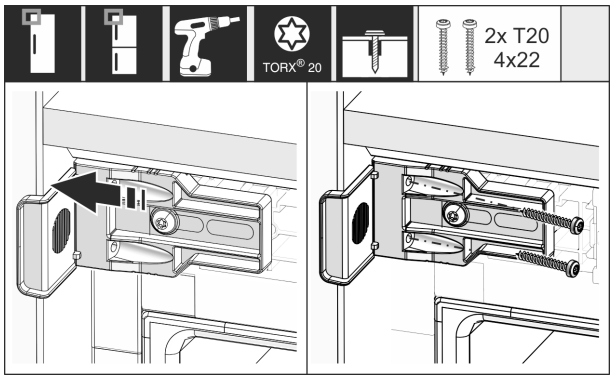

Fig. 41

▶ Move the bracket so it sits flush on the side wall of the cabinet recess.

▶ Tighten all the screws securely.

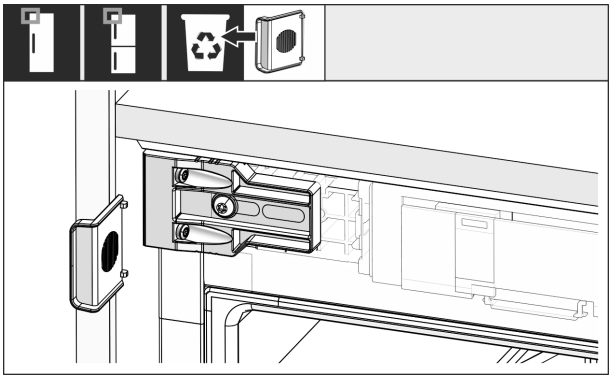

Fig. 42

▶ Remove the stop from the bracket on the handle side and dispose of it.

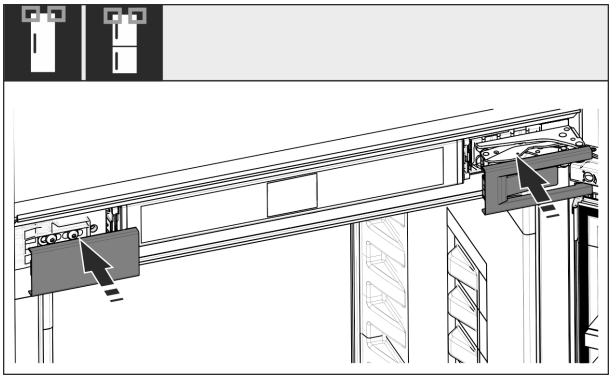

Fig. 43

▶ Put covers into position.

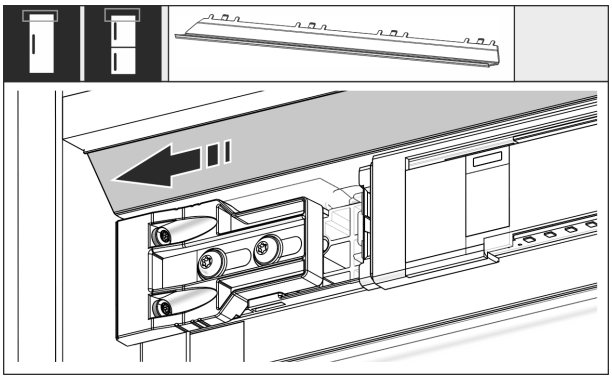

Fig. 44

▶ Slide the panel so that it sits flush with the side of the cabinet wall.

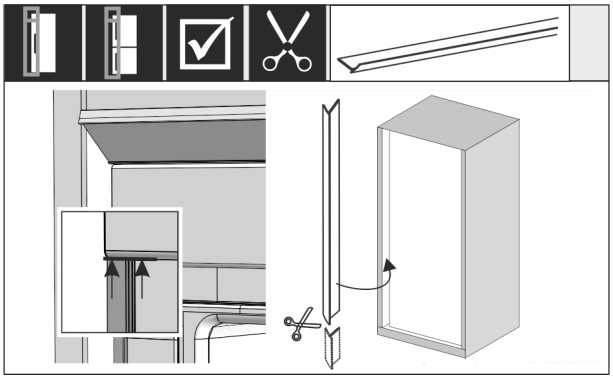

Fig. 45

▶ If necessary: Shorten the sealing strip as necessary with a sharp pair of scissors.

▶ Position the sealing strip below the top cover and press it in. The sealing strip is magnetic.

From a niche height of 1400 mm, install levelling rails:

Fig. 46

You must installed levelling rails under the appliance from a niche height of 1400 mm. The levelling rails **reduce the noise level**. Two levelling rails and an installation handle are enclosed as standard from a niche height of 1400 mm.

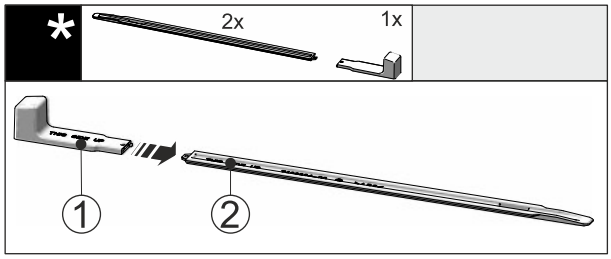

Fig. 47

▶ Attach the installation handle *Fig. 47 (1)* to the levelling rail *Fig. 47 (2)*.

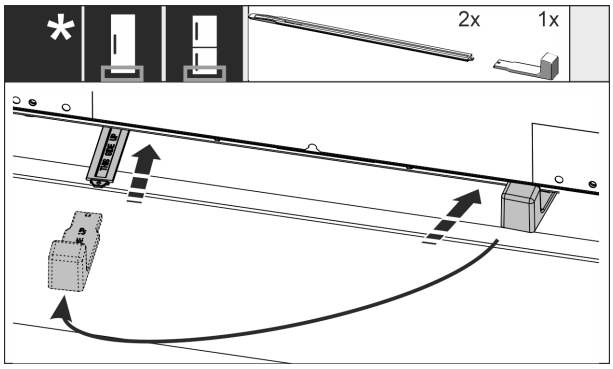

Fig. 48

▶ Push the levelling rail into the guide under the appliance base until it reaches the stop.
▶ Remove the installation handle and attach it to the second levelling rail.
▶ Proceed in the same way for the second levelling rail.

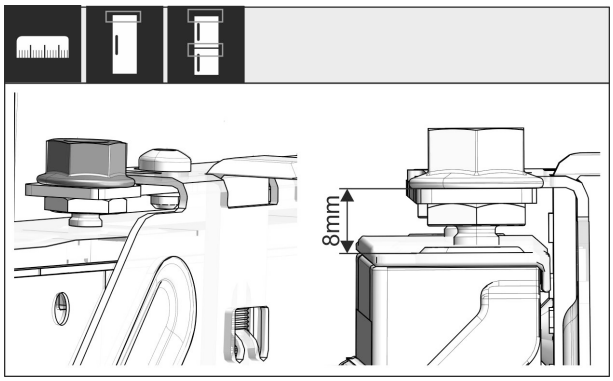

Fig. 49

▶ Close the door.
▶ Check the preset of 8 mm from the upper edge of the appliance door to the crosspiece support.

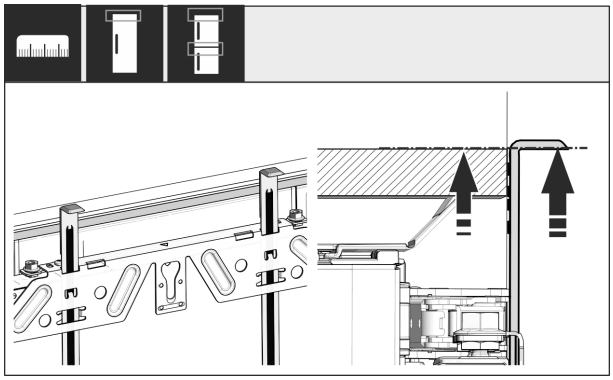

Fig. 50

▶ Push the assembly aids to the unit door height. Lower stop edge of the assembly aid = upper edge of the door to be assembled.

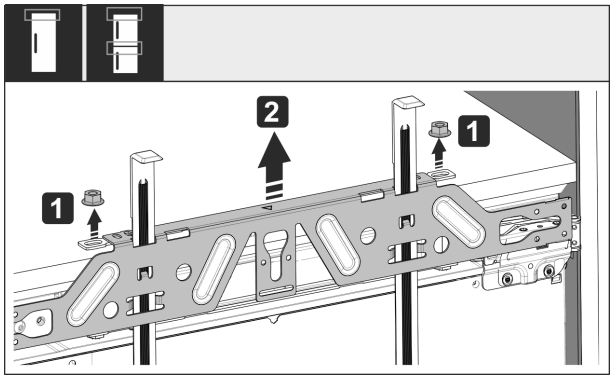

Fig. 51

▶ Loosen locknuts *Fig. 51 (1)*.
▶ Remove crosspiece *Fig. 51 (2)*.

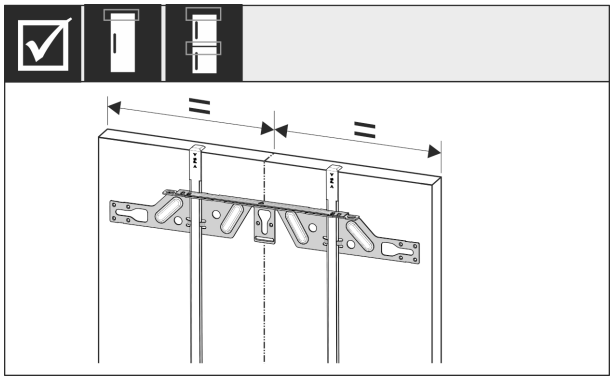

Fig. 52

▶ Hang the crosspiece on the inside of the unit door and make sure it is central.

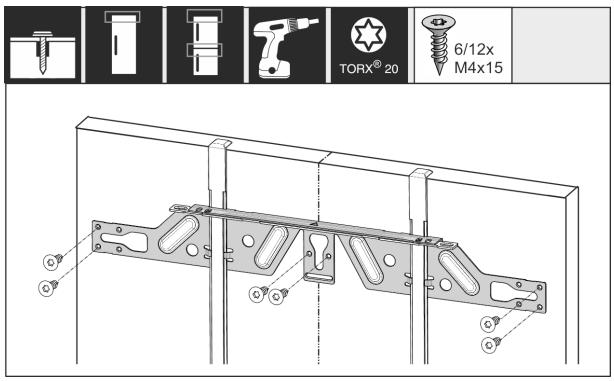

Fig. 53

▶ Fix the crosspiece using at least 6 screws for chipboard doors and at least 4 screws for panel doors.

*** Depending on model and options**

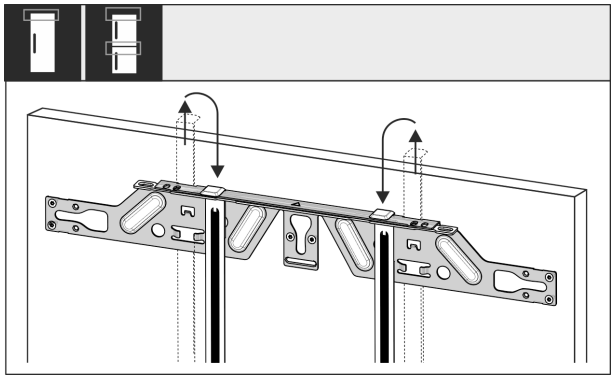

Fig. 54

▶ Remove the fitting aids, turn round and insert into the adjacent opening.

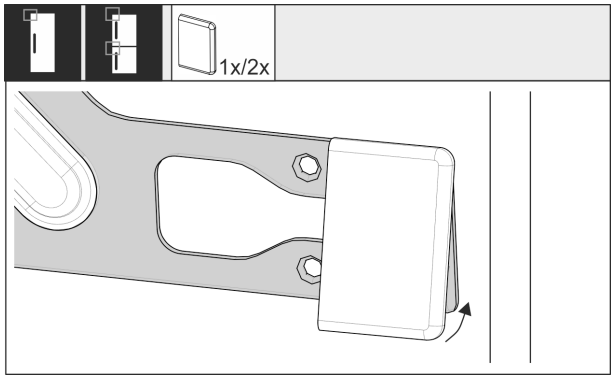

Fig. 55

▶ Put the cover on the crosspiece on the handle side.

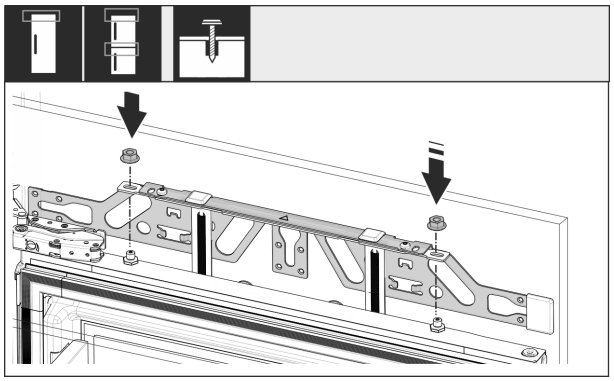

Fig. 56

▶ Attach the custom panel and loosely screw the lock nuts onto the adjusting bolts.

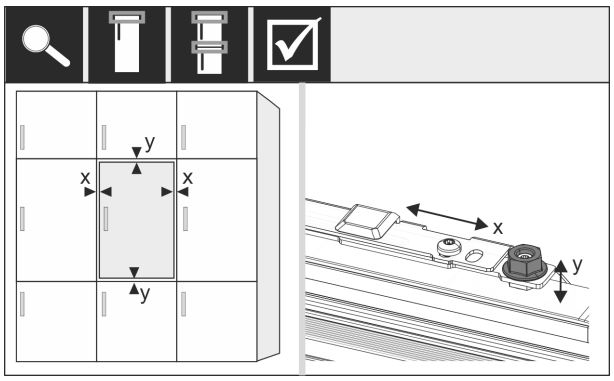

Fig. 57

▶ Align the custom panel in the X and Y direction using the adjusting bolts.

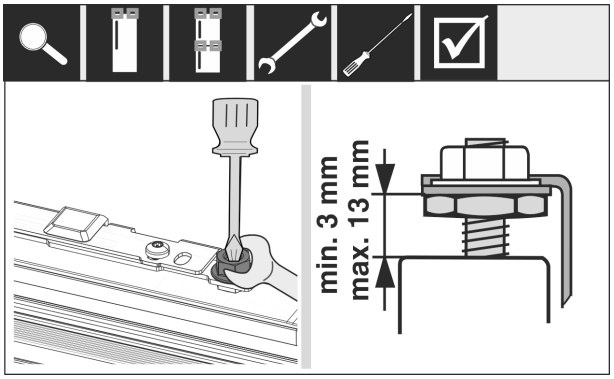

Fig. 58

▶ Tighten the lock nuts.

▶ Check the adjusted height.

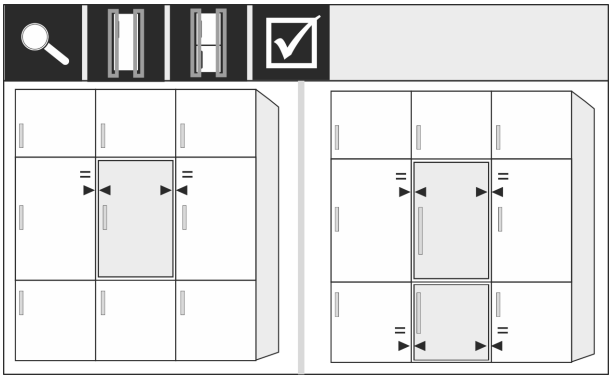

Fig. 59

For front panels thicker than 19 mm:

▶ Check the dimensions, weights and information in the following sections: (see 3.4 Custom panel weights) (see 3.12 Unit fronts)

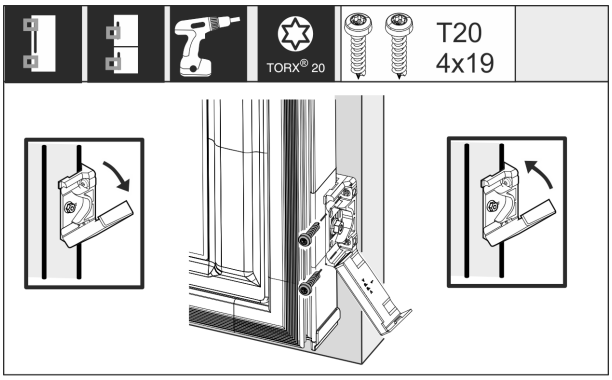

Fig. 60

Mounting the fastening bracket on the custom panel:

▶ Open the cover.

Mounting the fastening bracket on the custom panel:

▶ Align the front edge of the mounting bracket parallel with the custom door panel edge and screw the bracket down tightly.

Mounting the fastening bracket on the custom panel:

▶ Fold up the cover.

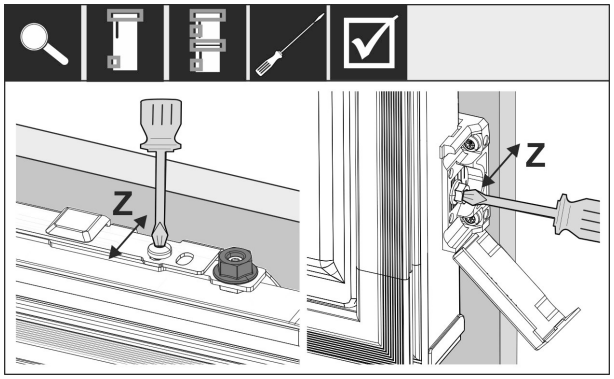

Fig. 61

Align the custom panel in the Z direction:

▶ Loosen the adjusting screw on the crosspiece and the screw on the mounting bracket.
▶ Move the door.

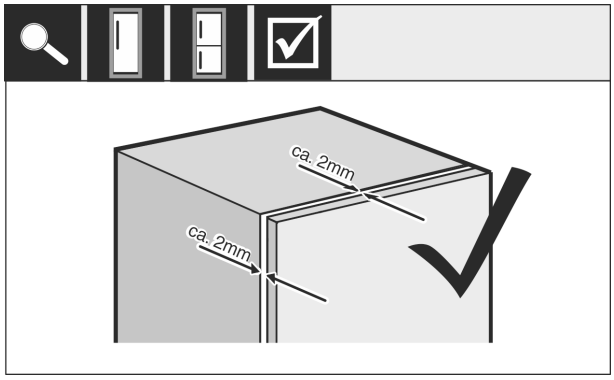

Fig. 62

▶ Check the gap between the custom panel and the unit body.
▶ Check all the screws and tighten them if necessary.

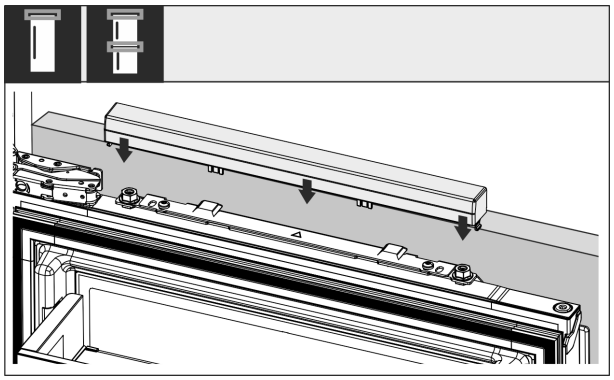

Fig. 63

▶ Put on the top cover.

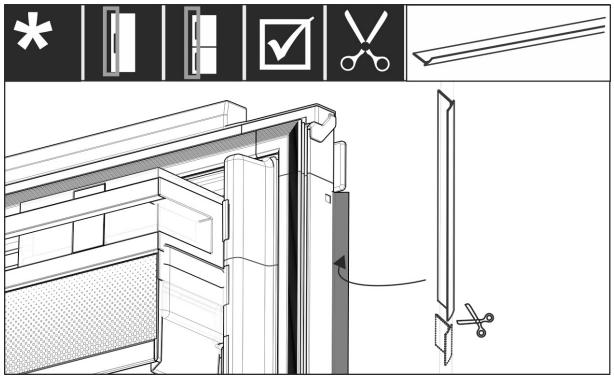

Fig. 64

▶ Cut the sealing strip to the required length.
▶ Insert the sealing strip between the front panel and the appliance door.

To make sure the appliance is correctly installed and there will not be any icing up, condensation or malfunctions, the following criteria apply:

- The door must close properly.
- The custom door panel must not touch the body of the unit.
- The seal on the upper corner on the handle side must be fitted securely.

▶ Check recess installation according to the criteria above.

3.12 Unit fronts

3.12.1 Dimensions

You require one unit door or two unit doors depending on the appliance variant. The size of the applicable unit door(s) depends on the total niche size and the unit body thickness.

Note
Observe the corresponding appliance and niche dimensions, and installation sketches.

General specifications:

- Please note our appliance-specific recommendations on size and weight for fixed door installation. (see 3.4 Custom panel weights)
- The unit body thickness should be at least 16 mm and no more than 19 mm.

Additional unit door above, below or adjacent:

- The vertical gap dimension between the unit doors must be 4 mm.
- The horizontal gap dimension between the unit doors must be 4 mm. Check the collision properties here. (see 3.12.3 Adjusting the joint gap without collisions)

Weight and hinges:

- If the unit fronts are heavy, the stress on the hinge is very high. The hinge may be damaged. Please note the maximum weight specification for your appliance in the chapter Furniture front weights (see 3.4 Custom panel weights) .
- If the unit front exceeds the maximum permissible weight, an appliance with sliding door technology can help, as the weight is divided over several concealed hinges on the unit.
- If you use long unit fronts that extend a long way over the appliances, we recommend an additional hinge (e.g. Kamat) that has exactly the same pivot point as the fixed door hinge used on your appliance. Using a further hinge (Kamat) divides the weight over several points. We recommend using a milled compensation fitting for high unit fronts, in order to counteract warping (convex/ concave).

3.12.2 Fitting the unit front(s)

Note the following when installing:

- The unit front must be installed symmetrically to the fridge door.
- The adjacent unit front is on the exact same level.
- The adjacent unit front has the same edge radius as the appliance front.
- The unit front is level and not strained.
- The unit front has a minimum depth setting of around 2 mm to the body.

▶ Install the appliance in the niche. (see 3.11 Installing the appliance in the recess)
▶ Fasten the unit front to the appliance door. (see 3.11 Installing the appliance in the recess)
▶ Adjust the gap.

▶ Check the unit front for collisions. (see 3.12.3 Adjusting the joint gap without collisions)

3.12.3 Adjusting the joint gap without collisions

3.12.3 Joint gap with adjoining furniture side panel

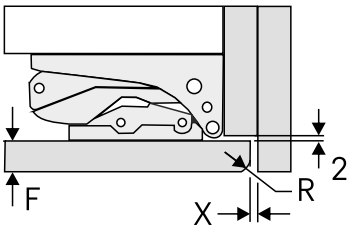

Fig. 65 Joint gap with adjoining furniture side panel
(F) Front thickness **(X)** Min. joint gap
(R) Unit front corner radius

Front thickness F [mm]	Unit front corner radius R [mm]	Min. joint gap X (vertical) [mm]
16 to 20	0 to 3	3
22	0	4
	1	4
	2	3
	3	3
24	0	8
	1	7
	2	6
	3	6
26	Not recommended.	

3.12.3 Joint gap with adjoining unit door

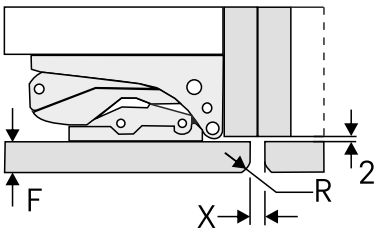

Fig. 66 Joint gap with adjoining unit door
(F) Front thickness **(X)** Min. joint gap
(R) Unit front corner radius

Front thickness F [mm]	Unit front corner radius R [mm]	Min. joint gap X (vertical) [mm]
16 to 20	0 to 3	2
22	0	4
	1	3
	2	3
	3	2
24	0	6
	1	5
	2	5
	3	4
26	0	8
	1	7
	2	7
	3	6

3.13 After installation

▶ Remove all transport safety fittings from the interior.

NOTICE
Damage to property caused by pointed or sharp objects!
Using pointed or sharp objects when removing packaging material may damage the appliance.
▶ Do not use any pointed or sharp objects to remove the packaging material.

▶ Remove protective films from the interior: Peel the film off flat along the surface of the component to minimise its adhesive force.
▶ Clean the appliance. (see 10.3 Cleaning the appliance)
▶ Note down the type (model, number), appliance name, appliance/serial number, date of purchase and retailer's address.

3.14 Connecting the appliance to the power supply

WARNING
Danger of electric shock and injury due to damaged appliance or damaged mains cable!
Danger of cuts and fatal injuries. If the appliance or the mains cable is damaged during transport, you may be electrocuted. You could also cut yourself on damaged parts of the appliance housing.
▶ Check the appliance and the mains cable for damage after transport.
▶ Never put the appliance into operation if the appliance or the mains cable are damaged.
▶ Contact Customer Service.

You can connect your appliance to the mains using the power cable supplied separately. The mains power cable has an appliance coupler at one end and a mains plug at the other end.

Make sure that the following requirements are fulfilled:
- The appliance and power cable are undamaged.
- The appliance is installed in accordance with the regulations. (see 3.11 Installing the appliance in the recess)
- Requirements for the electrical connection are met.
- Dimensions for connection in accordance with regulations are known and observed.
- Mains voltage and frequency correspond to the specifications on the type plate.
- The socket is earthed according to the regulations and fused.
- The fuse tripping current is between 10 A and 16 A.
- The socket is easily accessible and is not behind the appliance. (see 3.3 Recess dimensions)

NOTICE
Danger of damage to incorrect operation!
Damage to the electrical components of the appliance.
▶ Only use the supplied mains cable.

WARNING
Danger of fire due to incorrect connection!
Burns.
Damage to the appliance.
▶ Do not use an extension cable.
▶ Do not use distributor blocks.

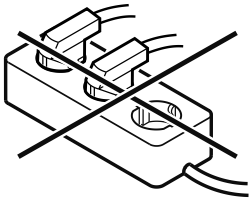

NOTICE
Danger of damage to incorrect connection!
Damage to the appliance.
▶ Do not connect the appliance to a stand-alone inverter, e.g. solar power systems and petrol generators.

▶ Connect the mains cable plug to the power supply. Ensure that the plug is tightly in the socket.
▷ The Liebherr logo appears in the display.
▷ The display switches to the standby symbol.
▷ If no action occurs within 60 seconds: The standby symbol fades or disappears.
▷ The appliance is connected. For information regarding first use, see the following section or the operating instructions.

3.15 Disposing of packaging

WARNING
Danger of suffocation due to packing material and plastic film!
▶ Do not allow children to play with packing material.

The packaging is made of recyclable materials:
- corrugated board/cardboard
- expanded polystyrene parts
- polythene bags and sheets
- polypropylene straps
- nailed wooden frame with polyethylene panel*

▶ Take the packaging material to an official collecting point.

4 Functionality of the Touch & Swipe display

You operate your appliance using the Touch & Swipe display. You select appliance functions in the Touch & Swipe display (hereafter referred to as display) by tapping them. If you do not perform any action on the display for 10 seconds, the display either jumps back to the higher-level menu or directly to the status display.

4.1 Navigation and symbol explanation

In the illustrations, different symbols are used to navigate the display. The following table describes these symbols.

Symbol	Description
	Briefly touch the display: Activates/deactivates function. Confirms selection. Opens submenu.
	Touch the display for a specified time (e.g. 3 seconds): Activates/deactivates function or value.
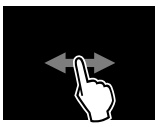	**Swipe left or right:** Navigate in the menu.
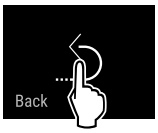	**Briefly touch the Back symbol:** Jumps back one menu level.
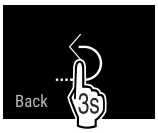	**Press and hold the Back symbol for 3 seconds:** Jumps back to the status display.
	Arrow with clock: It takes more than 10 seconds for the following message to appear in the display.
	Arrow with a time indication: It takes the specified amount of time until the following message appears in the display.
	"Open Settings menu" symbol: Navigates to the Settings menu and opens the settings menu. If necessary: Navigate to the desired function in the Settings menu. (see 4.2.1 Opening the Settings menu)
	"Open Advanced menu" symbol: Navigates to the Advanced menu and opens the advanced menu. If necessary: Navigate to the desired function in the Advanced menu. (see 4.2.2 Opening the expanded menu)
No action for 10 seconds	If you do not perform any action on the display for 10 seconds, the display either jumps back to the higher-level menu or directly to the status display.
Close the door and open it again.	If you close the door and immediately open it again, the display jumps directly back to the status display.

Note: Illustrations of the display are shown in the English version.

4.2 Menus

The appliance functions are distributed over various menus:

* Depending on model and options

Menu	Description
Main menu	When you switch the appliance on, you are automatically in the main menu. From here you can navigate to the most important appliance functions, to the Settings menu and to the Advanced menu.
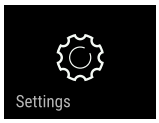 Settings menu	The Settings menu contains additional appliance functions for setting up your appliance.
Advanced menu	The advanced menu contains special appliance functions for setting up your appliance. Access to the Advanced menu is protected by the numerical code **1 5 1**.

4.2.1 Opening the Settings menu

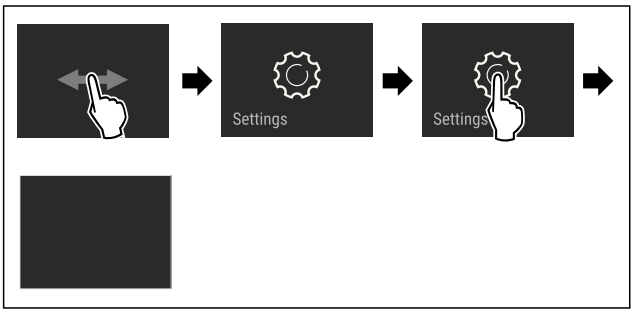

Fig. 67 Example illustration

▶ Carry out action steps according to the illustration.
▷ Settings menu is open.
▶ If necessary: Navigate to the desired function.

4.2.2 Opening the expanded menu

Fig. 68

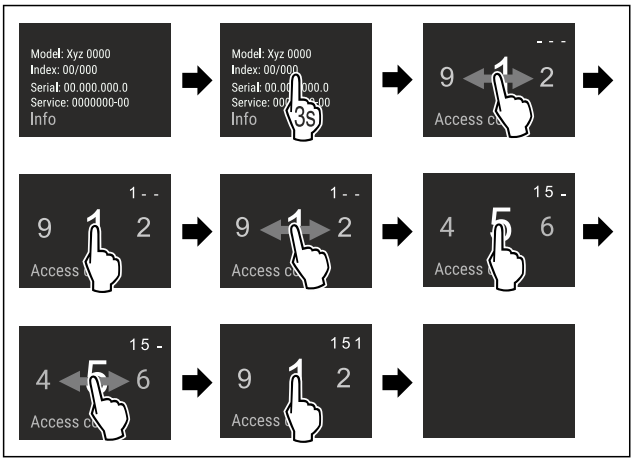

*Fig. 69 Example illustration, access with numerical code **151***

▶ Carry out action steps according to the illustration.
▷ The expanded menu is open.
▶ If necessary: Navigate to the desired function.

4.3 Sleep mode

If you do not touch the display for 1 minute, the display switches to sleep mode. In sleep mode, the display brightness is dimmed.

4.3.1 Ending sleep mode

▶ Touch the display briefly with your finger.
▷ Sleep mode is ended.

5 Putting into operation

5.1 Switching on appliance (first use)

Make sure that the following requirements are fulfilled:

- ❑ The appliance is properly installed and connected according to the installation instructions.
- ❑ All adhesive strips, adhesive and protective films and transport locks are removed from inside and on the appliance.
- ❑ All marketing leaflets are removed from the drawers.
- ❑ You are familiar with the functionality of the Touch & Swipe display. (see 4 Functionality of the Touch & Swipe display)

Switch on the appliance using the Touch & Swipe display:

▶ If the display is in sleep mode: Briefly touch the display.
▶ Carry out action steps according to the illustration.

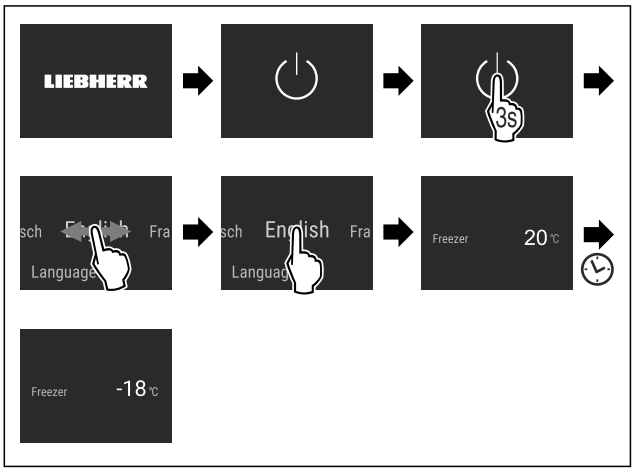

Fig. 70 Example illustration

▷ Status display appears.
▷ The appliance cools to the temperature set at the factory.
▷ The appliance starts in demo mode (status display with DEMO appears): If the appliance starts in demo mode, you can deactivate demo mode within the next 5 minutes. (see Demo mode)

More information:

- Start the SmartDevice for the first time. (see 2.3 SmartDevice) and (see WiFi)

Note
The manufacturer recommends:
▶ **Store frozen foods** at -18 °C or colder.
▶ Observe the notes on storing food. (see 6.1 Information regarding storage)

Note
Accessories can be purchased from the Liebherr-Hausgeräte store at go.liebherr.com/47wtc4.

6 Storage

6.1 Information regarding storage

WARNING
Fire hazard from electrical appliances!
If you use electrical appliances in the food area of your appliance, they can cause a fire.
▶ Do not use electrical appliances in the food area of the appliance unless recommended by the manufacturer.

Note
The energy consumption increases and the cooling power goes down if ventilation is not sufficient.
▶ Always keep air slots clear.

Observe the following specifications for storage:
- Package food properly.
- Leave space between goods to ensure good air circulation.
- Store food according to the instructions on the packaging.
- Always observe the best-before date indicated on the packaging.

Note
Failure to follow these guidelines can lead to foodstuffs spoiling.

6.2 Freezer compartment

Here, a dry, frosty storage climate is created at -18 °C. A frosty storage climate is suitable for storing frozen food for several months, for making ice cubes or freezing fresh food.

6.2.1 Freezing food

Freezing quantity

The maximum amount of fresh food that you can freeze within 24 hours is specified on the type plate (see 11.5 Model plate) under “Freezing capacity ... kg/24h”.

To ensure that food quickly freezes through, adhere to the following quantities per package:
- Fruit and vegetables up to 1 kg
- Meat up to 2.5 kg

Freezing food using SuperFrost

Depending on the quantity to be frozen, you can activate SuperFrost before freezing in order to achieve lower freezing temperatures. (see SuperFrost)
▶ Activate SuperFrost if the amount of food you have to freeze is more than approx. 2 kg.

The time at which you activate SuperFrost depends on the amount of food you have to freeze:

Freezing quantity	Time at which you should activate SuperFrost
Small amount of food to freeze	Activate SuperFrost about 6 hours before freezing. As soon as the appliance automatically deactivates SuperFrost, you can rearrange the food.
Maximum amount of food to freeze	Activate SuperFrost about 24 hours before freezing. As soon as the appliance automatically deactivates SuperFrost, you can rearrange the food.

Arranging your food properly

CAUTION
Risk of injury from broken glass!
Bottles and cans with beverages can burst during freezing. This applies in particular to carbonated beverages.
▶ Only freeze bottles and cans with beverages if you have activated the BottleTimer function in the SmartDevice app.

Appliance height < 1220 mm	
Freezing quantity	Arranging your food properly
Small amount of food to freeze	Distribute packaged groceries throughout all drawers. If possible, place groceries at the back of the drawer near the rear wall.
Maximum amount of food to freeze	Distribute packaged groceries throughout all drawers. If possible, place groceries at the back of the drawer near the rear wall.

Appliance height ≥ 1220 mm	
Freezing quantity	Arranging your food properly
Small amount of food to freeze	Distribute packaged groceries throughout all drawers, but do not place any groceries in the top drawer.
Maximum amount of food to freeze	Distribute packaged groceries throughout all drawers. If possible, place groceries at the back of the drawer near the rear wall.

6.2.2 Defrosting food

WARNING
Risk of food poisoning!
▶ Do not re-freeze thawed food.
▶ Use defrosted foodstuff as soon as possible.

You can defrost food in several ways:
- In a fridge
- In the microwave
- In the oven/fan-assisted oven
- At room temperature

▶ Take out only as much food as necessary.

6.2.3 Freezer tray

You can freeze berries, herbs, vegetables and other small frozen food in the freezer tray without it all freezing together. The frozen food is less likely to get squashed and subsequent portioning is easier.
▶ Distribute food on the freezer tray without packaging and well spaced out.

6.3 Storage times

Refer to the specified storage times as a guide.

In the case of foods with a minimum shelf life, the date indicated on the packaging still applies.

Recommended storage period for various types of food		
Ice cream	at -18 °C	2 to 6 months
Sausages, ham	at -18 °C	2 to 3 months
Bread, baked goods	at -18 °C	2 to 6 months
Game, pork	at -18 °C	6 to 9 months
Fatty fish	at -18 °C	2 to 6 months
Lean fish	at -18 °C	6 to 8 months
Cheese	at -18 °C	2 to 6 months
Poultry, beef	at -18 °C	6 to 12 months
Vegetables, fruit	at -18 °C	6 to 12 months

7 Saving energy

- Pay attention to good ventilation. Do not cover ventilation holes or grids.
- Always keep the fan air slits clear.
- Do not install the appliance in direct sunlight or near radiators or similar sources of heat.
- If the appliance is installed directly next to an oven, the energy consumption may increase slightly. This is dependent on the service life and usage intensity of the oven.
- Energy consumption depends on the installation conditions, e.g. the ambient temperature . A warmer ambient temperature can increase the energy consumption.
- Open the appliance for as short a time as possible.
- The lower the temperature is set the higher the energy consumption.
- Keep all food properly packed and covered. This prevents frost from forming.
- Inserting warm food: allow to cool down to room temperature first.

8 Controls

8.1 Controls and displays

8.1.1 Status display

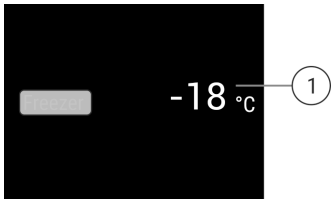

Fig. 71 The status display shows the actual temperature.

(1) Temperature display

The status display shows the actual temperature and is the initial display. Navigation to the functions takes place from there.

8.1.2 Display symbols

Display symbols provide information on the current appliance status:

Symbol	Appliance status
	Standby The appliance or temperature zone is switched off.
	Flashing number Appliance is working. Temperature flashes until the set temperature is reached.
	Flashing symbol Appliance is working. Setting is made.

8.2 Appliance functions

8.2.1 Notes on the appliance functions

The appliance functions are set at the factory so that your appliance is fully functional.

Before you alter, activate or deactivate the device functions, make sure that the following requirements are met:

- ❑ You have read and understood the descriptions of how the display works. (see 4 Functionality of the Touch & Swipe display)
- ❑ You have familiarised yourself with the operating and display elements of your appliance.

Switching the appliance off and on

Use this function to switch the entire appliance off and on.

Switching off the appliance

When you switch the appliance off, then the previously saved settings are saved.

Make sure that the following requirements are fulfilled:

- ❑ Handling instructions (see 12 Shutting down) are carried out.

Fig. 72

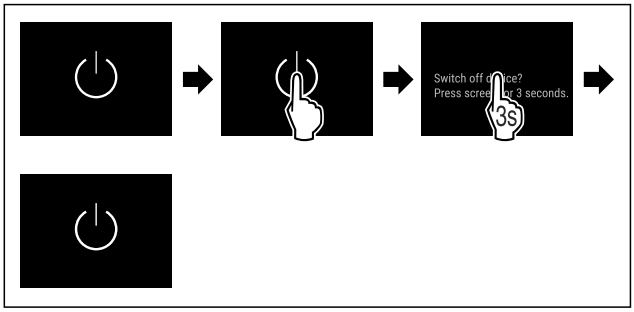

Fig. 73

▶ Carry out action steps according to the illustration.
▷ Appliance is switched off.
▷ The standby symbol appears in the display.
▷ Display turns black.

Switching on the appliance

If the display is in sleep mode:

▶ Briefly touch the display.

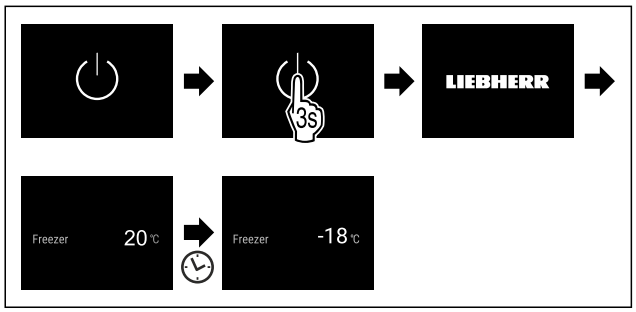

Fig. 74 Example illustration

▶ Carry out action steps according to the illustration.
When the appliance starts in demo mode:
▶ Deactivating demo mode. (see Deactivating demo mode)
▷ The appliance is switched on.
▷ Previous settings are restored.
▷ The appliance cools to the target temperature set.

-18 °C Temperature

Use this function to set the temperature.

The temperature depends on the following factors:

- Frequency of door opening
- Duration of door opening
- Room temperature of the installation site
- Type, temperature and quantity of food

Freezer compartment	Factory-set temperature	Recommended setting
-18 °C	-18 °C	-18 °C

Setting the temperature

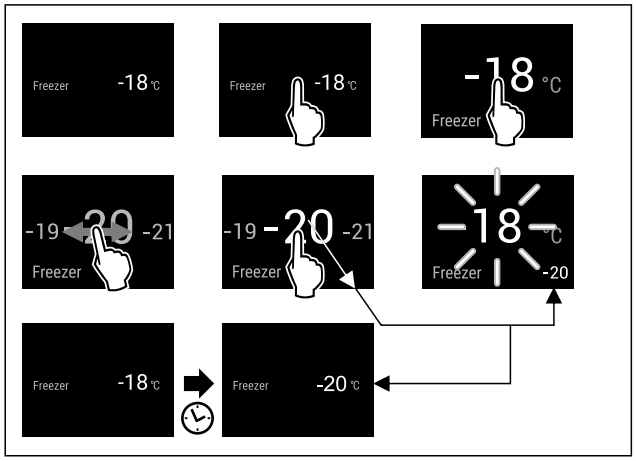

Fig. 75 Example illustration

▶ Carry out action steps according to the illustration.
▷ Temperature is set.

SuperFrost

You can use this function to activate or deactivate SuperFrost. If SuperFrost is activated, then the appliance increases the freezing capacity. It allows you to achieve lower freezing temperatures.

Application:

- Quickly freeze fresh food through to the core.
  This ensures that the nutrition, appearance and taste of frozen food is maintained.
- Increase the cold reserve in stored frozen food before defrosting the appliance.

If the function is active, the appliance operates at higher power. As a result, the appliance's operating noise may be temporarily louder and energy consumption will increase.

If the door is open for too long, e.g. because you are putting food in, the appliance automatically checks whether the actual temperature in the appliance matches the set temperature. If the difference exceeds a certain value, the appliance automatically cools more vigorously. As a result, the temperature shown on the display may be higher than the actual temperature in the appliance. This is normal and your appliance is working correctly.*

Activating SuperFrost

Make sure that the following requirements are fulfilled:

❑ Freezing quantity and time for activation of SuperFrost are taken into account. (see Freezing food using SuperFrost)

Fig. 76

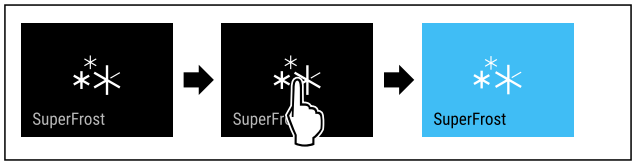

Fig. 77

▶ Carry out action steps according to the illustration.
-or-
▶ Activate with the SmartDevice app.

▷ SuperFrost is activated.
▷ The temperature display turns blue.

Deactivating SuperFrost

SuperFrost is automatically deactivated after 56 to 72 hours depending on the quantity of the food inserted. However, you can also deactivate SuperFrost manually at any time:

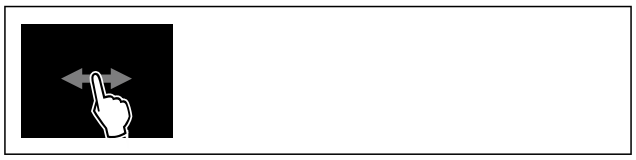

Fig. 78

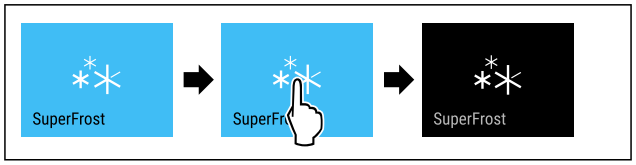

Fig. 79

▶ Carry out action steps according to the illustration.
-or-
▶ Deactivate with the SmartDevice app.

▷ SuperFrost is deactivated.
▷ The appliance continues to run in normal mode.
▷ The appliance cools to the temperature set previously.

*** Depending on model and options**

PartyMode

You can use this function to activate or deactivate PartyMode. PartyMode activates various functions that are useful for a party.

PartyMode activates the following functions:

- SuperFrost (see SuperFrost)

You can adjust all listed functions individually and flexibly. When you deactivate PartyMode, all changes are discarded.

If the function is active, the device operates at higher power. As a result, the device's operating noise may be temporarily louder and energy consumption will increase.

Activating PartyMode

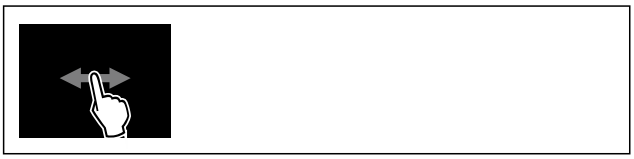

Fig. 80

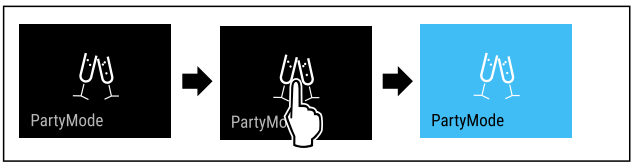

Fig. 81

▶ Carry out action steps according to the illustration.
▷ PartyMode and the associated functions are activated.
▷ The temperature display turns blue.
▷ The current temperature flashes until the target temperature is reached.

Deactivating PartyMode

The PartyMode is automatically deactivated after 24 seconds. However, you can also deactivate PartyMode manually at any time:

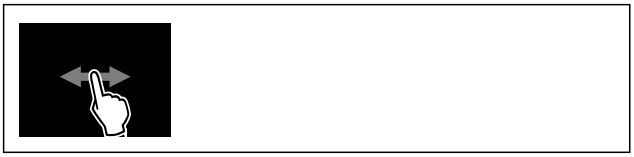

Fig. 82

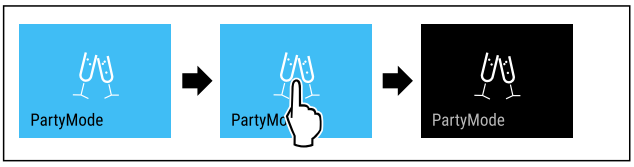

Fig. 83

▶ Carry out action steps according to the illustration.
▷ PartyMode is deactivated.
▷ The appliance cools to the temperature set previously: The current temperature flashes until the target temperature is reached.

SabbathMode

You can use this function to activate or deactivate SabbathMode. If you activate this function, some electronic functions are switched off. As a result, your device meets the religious requirements for Jewish holidays such as Sabbath and complies with STAR-K Kosher certification.

Device status when SabbathMode is active
The status display shows SabbathMode permanently.
All functions on the display are locked except for the **Deactivate SabbathMode function**.
Active functions remain active.
The display remains bright when you close the door.
The interior lighting is deactivated.
Reminders are not implemented. The set time interval stops.
Reminders and warnings are not displayed.
There is no door alarm.
There is no temperature alarm.
The defrosting cycle operates only for the specified time, without considering the appliance consumption.
After a power failure, the appliance returns to SabbathMode.

Device status

Note
This appliance has certification from the “Institute for Science and Halacha”. (www.machonhalacha.co.il)

You can find a list of STAR-K-certified appliances at www.star-k.org/appliances.

Activating SabbathMode

WARNING
Danger of food poisoning from spoiled food!
If you have SabbathMode activated and a power failure occurs, no message appears in the status display about the power failure. Once the power is restored, the appliance continues to operate in SabbathMode. The power failure may mean that food spoils and the consumption of this food could lead to food poisoning.
After a power failure:
▶ Do not consume food that was frozen and has thawed out.

Fig. 84

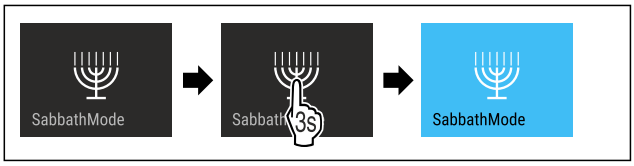

Fig. 85

▶ Carry out action steps according to the illustration.
▷ SabbathMode is activated.
▷ The status display shows SabbathMode permanently.

Deactivating SabbathMode

The SabbathMode is automatically deactivated after 80 hours. However, you can also deactivate SabbathMode manually at any time:

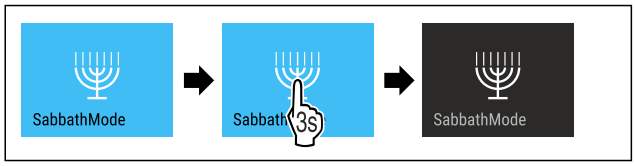

Fig. 86

▶ Carry out action steps according to the illustration.
▷ SabbathMode is deactivated.

EnergySaver

You can use this function to activate or deactivate Energy saving mode. If energy saving mode is activated, the energy consumption decreases and the temperature in the device increases. The food remains fresh, but the shelf life is shortened.

Temperature zone	Recommended setting (see Setting the temperature)	Temperature with active EnergySaver
-18 °C	-18 °C	-16 °C

Temperatures

Activating EnergySaver

Fig. 87

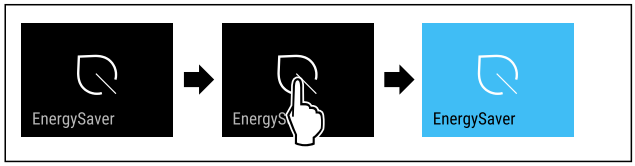

Fig. 88

▶ Carry out action steps according to the illustration.
▷ Energy saving mode is activated.

Deactivating EnergySaver

Fig. 89

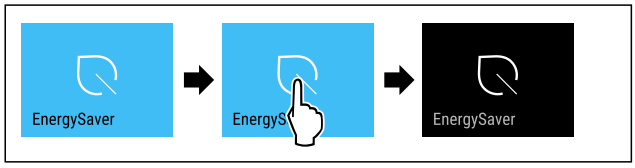

Fig. 90

▶ Carry out action steps according to the illustration.
▷ Energy saving mode is deactivated.

Input lock

You can use this function to activate or deactivate the input lock. The input lock prevents the appliance being operated accidentally, e.g. by children.

Application:

- Avoid unintentional modification of functions.
- Avoid unintentional switching off of the device.
- Avoid unintentional temperature setting.

Activating the input lock

If you activate the input lock, you can continue to navigate in the menus but you cannot select or change other functions.

Fig. 91

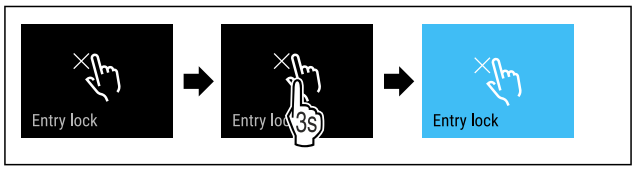

Fig. 92

▶ Carry out action steps according to the illustration.
▷ Input lock is activated.

Deactivating the input lock

Fig. 93

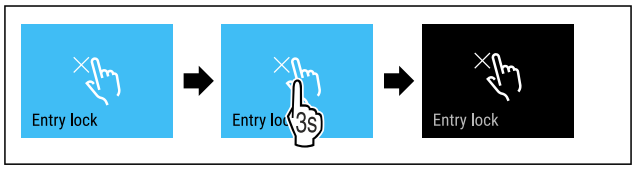

Fig. 94

▶ Carry out action steps according to the illustration.
▷ Input lock is deactivated.

Language

Use this function to set the display language.

You can select the following languages:

- Deutsch
- English
- Français
- Español
- Italiano
- Nederlands
- Čeština
- Polski
- Português
- Bulgarian
- Русский
- 温度单位

Setting the language

Fig. 95

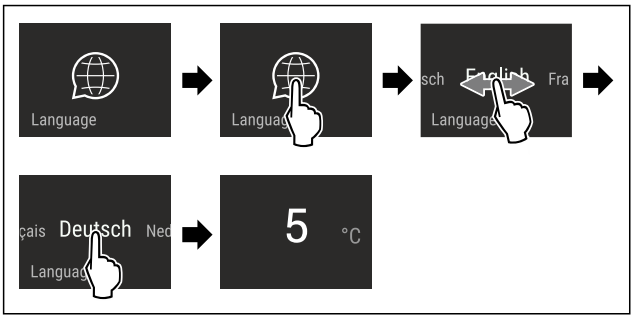

Fig. 96 Example illustration depending on the language and temperature

▶ Carry out action steps according to the illustration.
▷ The language is set.
▷ The display returns to the status display.

Temperature unit

Use this function to set the temperature unit. You can set degrees Celsius or degrees Fahrenheit as the temperature unit.

Setting the temperature unit

Fig. 97

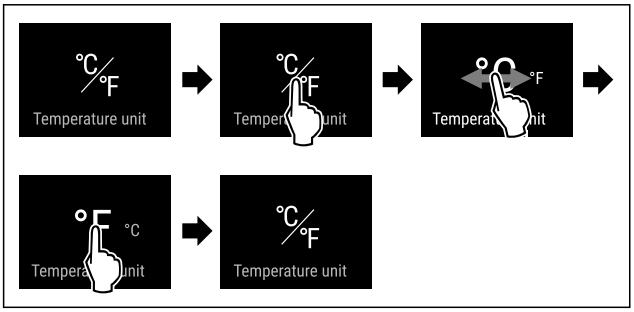

Fig. 99 Example illustration: Switch from degrees Celsius to degrees Fahrenheit.

▶ Carry out action steps according to the illustration.
▷ The temperature unit is set.

Display brightness

Use this function to set the display brightness in stages.

You can select the following brightness levels:

- 40 %
- 60 %
- 80 %
- 100 % (pre-setting)

Setting the brightness

Fig. 100

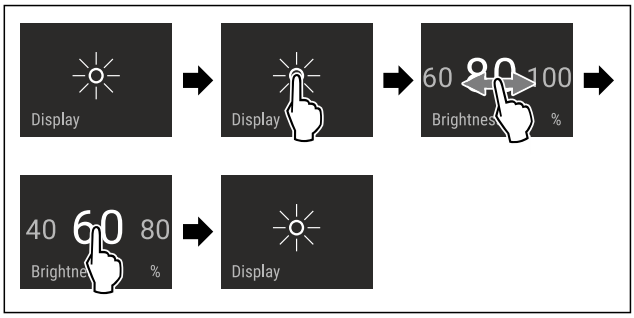

Fig. 101 Example illustration: Switch from 80 % to 60 %.

▶ Carry out action steps according to the illustration.
▷ The brightness is set.

WiFi

Use this function to connect your appliance to WiFi. You can then operate it via the SmartDevice app on a mobile device. You can also use this function to disconnect or reset the WiFi connection.

More information on the SmartDevice: (see 2.3 SmartDevice)

Note
The SmartDevice function is not available in the following countries: Russia, Belarus, Kazakhstan.

Establishing the WiFi connection for the first time

Make sure that the following requirements are fulfilled:

❑ You have installed the SmartDevice app (see apps.home.liebherr.com).
❑ Registration in the SmartDevice app is completed.

Fig. 102

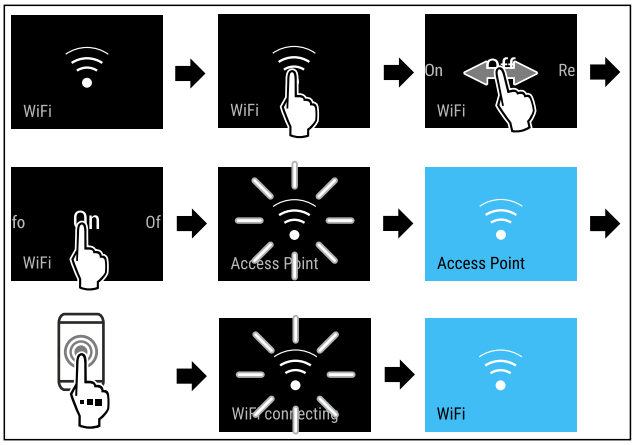

Fig. 103

▶ Carry out action steps according to the illustration.
▷ Connection is established.

Disconnecting from the WiFi

Fig. 104

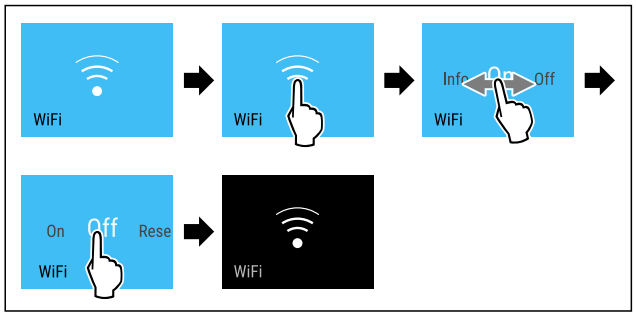

Fig. 105

▶ Carry out action steps according to the illustration.
▷ There is no connection.

Resetting the WiFi connection

Fig. 106

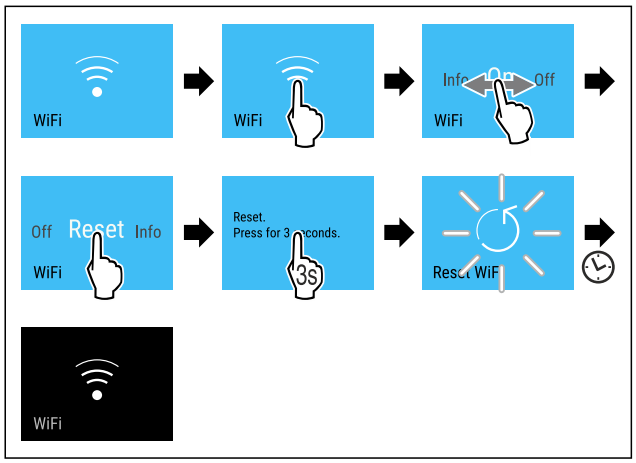

Fig. 107

▶ Carry out action steps according to the illustration.
▷ WiFi connection and other WiFi settings are reset to factory settings.

Showing information about the WiFi connection

Fig. 108

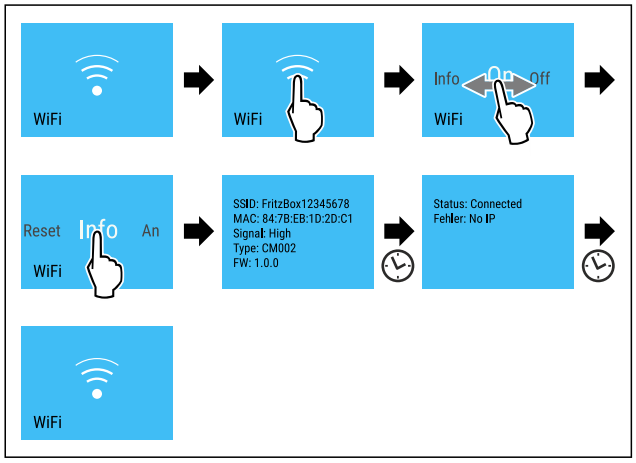

Fig. 109

▶ Carry out action steps according to the illustration.

Device information

Use this function to indicate the model name, index, serial number and service number of your device. You will need the device information when you contact customer service. (see 11.4 Customer Service)

This function also opens the Advanced menu. (see 4 Functionality of the Touch & Swipe display)

Indicating the device information

Fig. 110

Fig. 111

▶ Carry out action steps according to the illustration.
▷ Display indicates device information.

Software

Use this function to indicate the software version of your device.

Indicating the software version

Fig. 112

Fig. 113

▶ Carry out action steps according to the illustration.
▷ Display indicates software version.

Start defrosting cycle

Use this function to start the automatic defrosting cycle manually if it does not start automatically in the event of a fault.

Starting defrosting cycle

Fig. 114

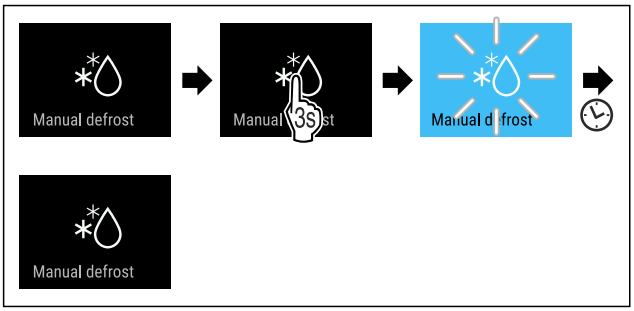

Fig. 115

▶ Carry out action steps according to the illustration.
▷ Defrosting cycle has started: Icon flashes until defrosting cycle is automatically completed.
▷ When defrosting cycle is finished: The device continues to run in normal mode.

Cancelling defrosting cycle

The defrosting cycle will be stopped automatically. However, you can also cancel the defrosting cycle at any time during the defrosting process:

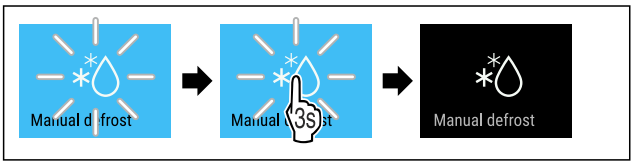

Fig. 116

▶ Carry out action steps according to the illustration.
▷ Defrosting cycle is cancelled.
▷ The device continues to run in normal mode.

Door alarm

Use this function to activate or deactivate the door alarm. The door alarm sounds if the door is open for too long. The door alarm is activated on delivery. You can set how long the door may be open before the door alarm sounds.

The following values can be set:

- 1 minute
- 2 minutes
- 3 minutes
- Off

Setting the door alarm

Fig. 117

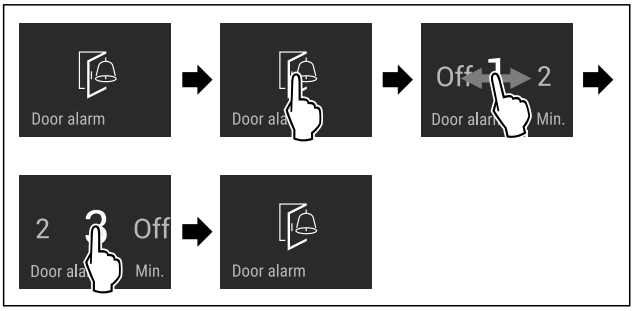

Fig. 118 Example illustration: Change door alarm from 1 minute to 3 minutes.

▶ Carry out action steps according to the illustration.
▷ The door alarm is set.

Deactivating the door alarm

Fig. 120

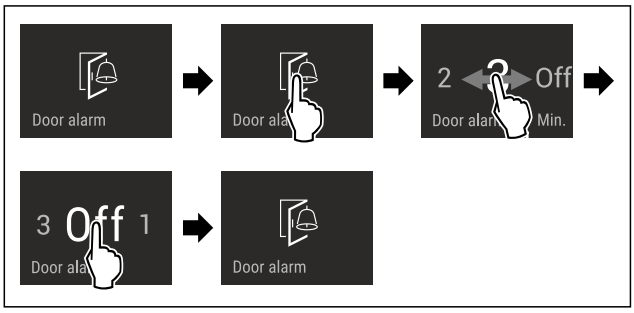

Fig. 121

▶ Carry out action steps according to the illustration.
▷ The door alarm is deactivated.

Demo mode

Demo mode is a special feature for dealers who want to demonstrate appliance features. If you activate demo mode, all refrigeration functions are deactivated.

If you switch on your appliance and “Demo” appears in the status display, then demo mode is already activated.

If you activate and then deactivate demo mode, the appliance will be reset to factory defaults. (see Resetting to factory settings)

Activating demo mode

Fig. 122

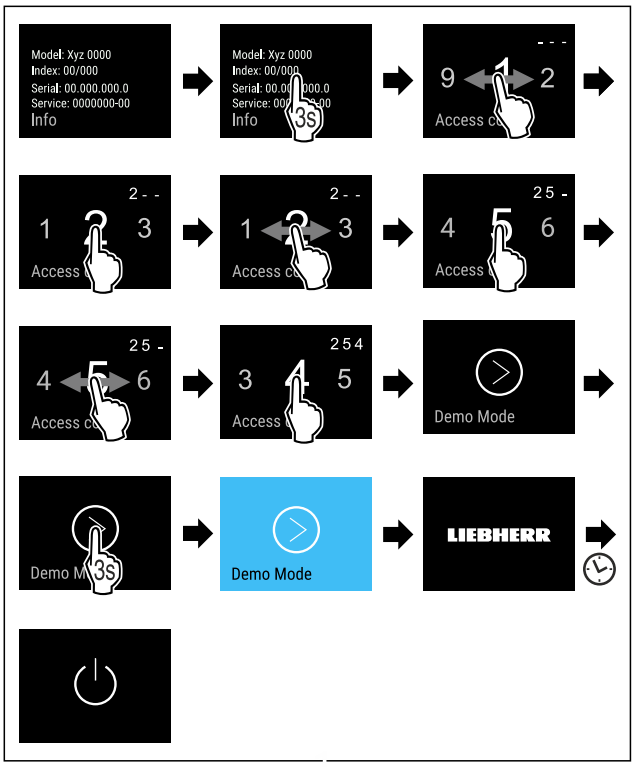

Fig. 123

▶ Carry out action steps according to the illustration.
▷ Demo mode is activated.
▷ Appliance is switched off.
▶ Switch on the appliance. (see 5.1 Switching on appliance (first use))
▷ “DEMO” appears in the status display.

Deactivating demo mode

Fig. 124

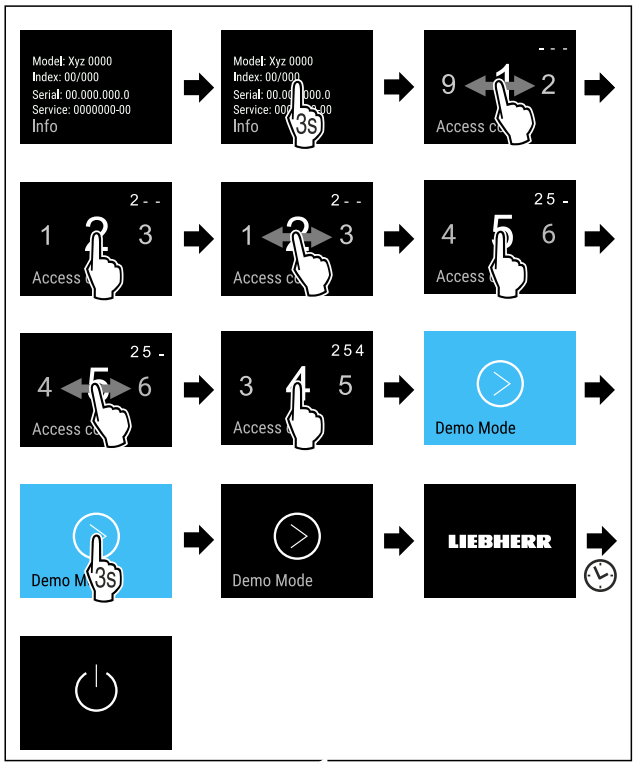

Fig. 125

▶ Carry out action steps according to the illustration.
▷ Demo mode is deactivated.
▷ Appliance is switched off.
▶ Switch on the appliance. (see 5.1 Switching on appliance (first use))
▷ Appliance is reset to factory settings.

Resetting to factory settings

Use this function to reset all settings to factory defaults. All settings you have made so far are reset to their original settings.

Performing a reset

Fig. 126

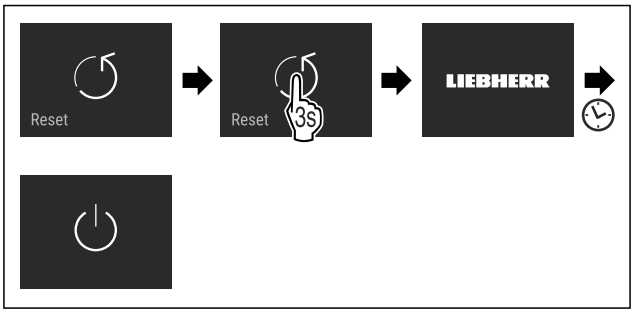

Fig. 127

▶ Carry out action steps according to the illustration.
▷ Device is reset.
▷ Device is switched off.
▶ Restart the device. (see 5.1 Switching on appliance (first use))

8.3 Messages

There are two categories of messages:

Category	Importance
Warning	Warnings appear in the event of a door alarm or malfunction. Simple warnings can be cancelled by yourself. In the event of serious malfunctions, you must contact customer service. (see 11.4 Customer Service)
Reminder	Reminders remind you of general processes. You can carry out these operations to end the message.

8.3.1 Overview of warnings

Behaviour of the appliance in the event of warnings:
- Warning appears in red on the display.
- The alarm tone sounds at an ever-increasing volume.
- The interior lighting pulsates for some warnings.

Message	Cause	Exit the message
Close the door. **Door alarm**	The message appears if the door is open for too long.	Carry out action steps. (see Door alarm)
Power failure **Power outage alarm**	The message appears if the freezing temperature has risen due to a power failure.	
Temperature alarm **Temperature alarm**	The message appears if the freezing temperature does not correspond to the set temperature.	Carry out action steps. (see Temperature alarm)
Error **Error**	The message appears if there is an appliance error. A component of the appliance has a fault.	Carry out action steps. (see Error)

Message	Cause	Exit the message
WLAN error	The message appears if the appliance could not be connected to the WLAN. (see Establishing the WiFi connection for the first time) The message only appears during the initial setup.	Carry out action steps. (see WLAN error)

8.3.2 Ending warnings

Door alarm

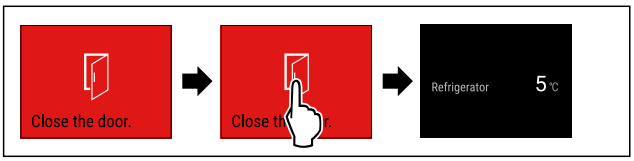

Fig. 128 Example illustration

▶ Carry out action steps according to the illustration.

-or-

▶ Close the door.

▷ The display returns to the status indicator.
▷ The appliance cools more vigorously, which means that the temperature shown on the display may be higher than the actual temperature inside the appliance.*
▷ Appliance noises can be louder.*

You can set how long the door may be open before the door alarm sounds. (see Setting the door alarm)

Power outage alarm

When the power failure has ended, the appliance will automatically cool down to the previously set target temperature without you having to confirm the message. However, for the message to disappear from the display, you must confirm it.

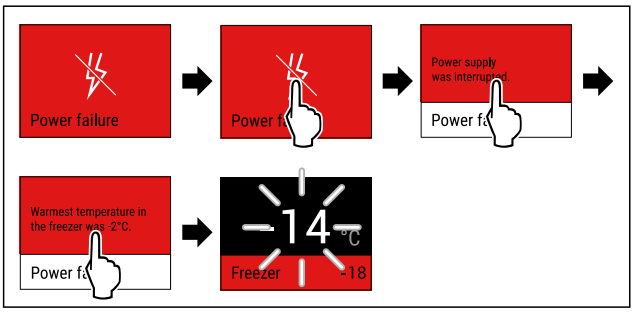

Fig. 129 Example illustration

▶ Briefly touch the display.
▷ Display shows information about the warning.
▶ Briefly touch the display.
▷ Warmest freezing temperature is displayed.
▷ If the freezing temperature was below -9 °C: Food can still be consumed.
If the freezing temperature has risen above -9 °C:
▶ Check the food.
▶ Briefly touch the display.
▷ The display returns to the status indicator: Current temperature and target temperature are displayed.

Temperature alarm

Temperature differences can be caused by:

- You have put in warm, fresh food.
- Too much warm air has got in while you were sorting out the freezer or removing items.
- There has been a longer power failure.
- The appliance is faulty.

▶ Eliminate causes.
▷ The appliance cools to the target temperature set previously.

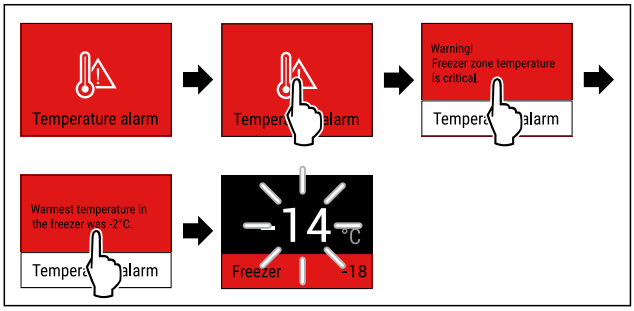

Fig. 130 Example illustration

▶ Briefly touch the display.
▷ Display shows information about the warning.
▶ Briefly touch the display.
▷ Warmest freezing temperature is displayed.
▷ If the freezing temperature was below -9 °C: Food can still be consumed.
If the freezing temperature has risen above -9 °C:
▶ Check the food.
▶ Briefly touch the display.
▷ The display returns to the status indicator: Current temperature and target temperature are displayed.

Error

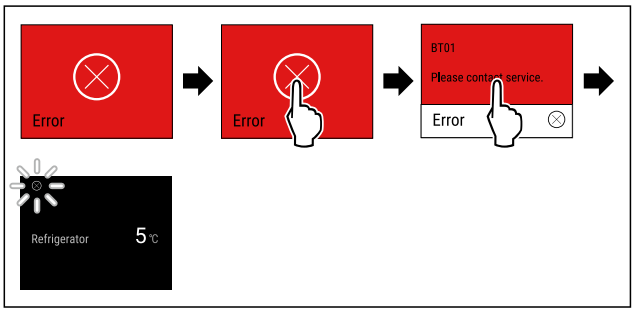

Fig. 131 Example illustration

▶ Briefly touch the display.
▷ Error code is displayed.
▶ Note the error code.
▶ Briefly touch the display.
▷ The display returns to the status indicator.
▶ Contact Customer Service. (see 11.4 Customer Service)

WLAN error

▶ Check WLAN connection.
▶ Reconnect the appliance to the WLAN. (see WiFi)

8.3.3 Overview of reminders

Behaviour of the appliance during reminders:

- Reminder appears yellow on the display.
- Alarm tone sounds.
- The interior lighting pulsates for some reminders.

9 Features

9.1 Drawers

You can remove the drawers for cleaning.

You can remove the drawers to use VarioSpace.

The way to remove/insert the drawers varies depending on the pull-out system. Your appliance can contain various pull-out systems.

Note
The energy consumption increases and the cooling power goes down if ventilation is not sufficient.
▶ Leave the bottom drawer inside the appliance.
▶ Always keep the inside vents at the rear wall clear.

9.1.1 Drawer on appliance base or glass shelf

The drawer runs directly on the appliance base or on a glass shelf. There are no rails.

When you remove the drawers, you can use the glass shelves below them as storage shelves.

Removing drawer

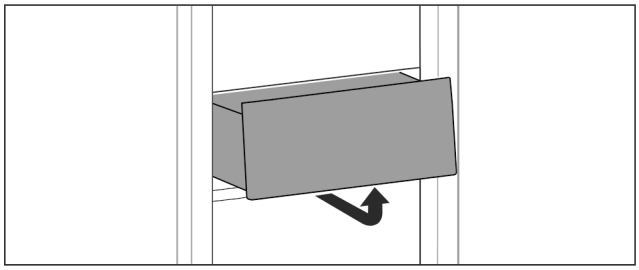

Fig. 132
▶ Remove drawer as shown in the illustration.

Inserting drawer

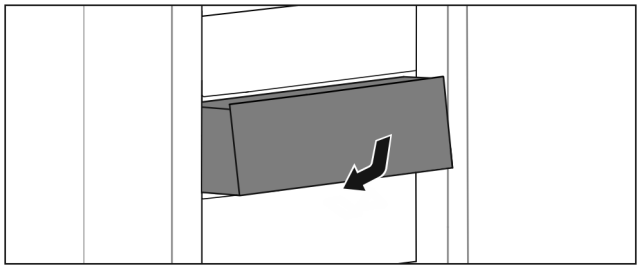

Fig. 133
▶ Insert drawer as shown in the illustration.

9.1.2 Top tilting drawer*

When you pull out the top drawer, it tilts forward. This gives you a better view into the drawer. The function depends on the height of the appliance.

When you remove the tilting drawers, you can use the glass shelf below them as a storage shelf.

Removing drawer

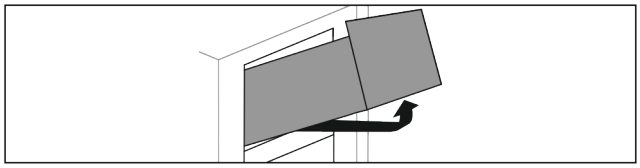

Fig. 134
▶ Pull out drawer as far as it will go.
▶ Lift drawer up at the front and at the same time push up at the back from below.
▶ Remove drawer to the front.

Inserting drawer

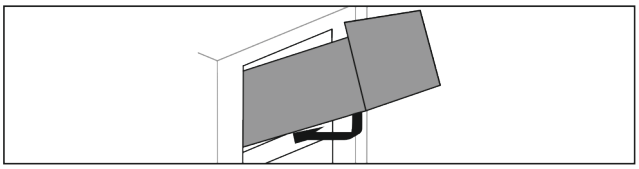

Fig. 135
▶ Position drawer as shown.
▷ The drawer rests on the glass panel.
▶ Lift drawer slightly from below at the back and slide over the lip.
▶ Slide in drawer to the back.

9.1.3 Drawer on moulded rib

The drawer runs directly on the moulded rib. There are no rails.

Removing drawer

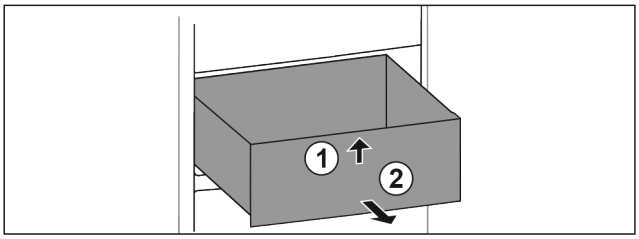

Fig. 136
▶ Pull out drawer as far as it will go.
▶ Lift up drawer at the front. *Fig. 136 (1)*
▶ Remove drawer to the front. *Fig. 136 (2)*

Inserting drawer

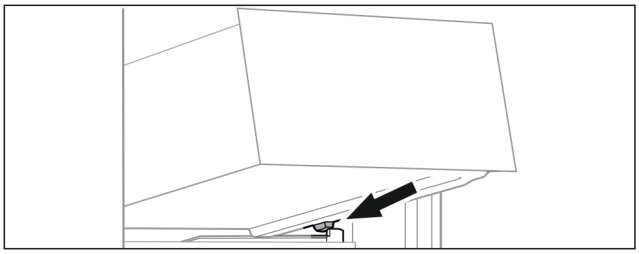

Fig. 137
▶ Place drawer at an angle behind the stoppers on the moulded rib. (see Fig. 137)
▶ Lower drawer.
▶ Slide in drawer to the back.

9.2 Glass shelves

You can remove the glass shelves under the drawers for cleaning.

You can remove the glass shelves under the drawers to use VarioSpace.

9.2.1 Removing / inserting the glass shelf under the tilting drawer*

The glass shelf is located under the top tilting drawer.

Make sure that the following requirements are fulfilled:
❑ Drawer has been removed. (see 9.1.2 Top tilting drawer*)

Removing glass shelf

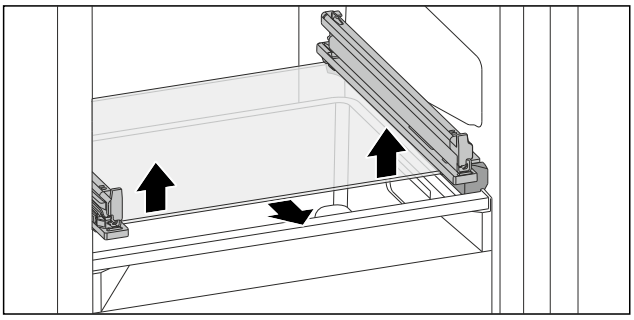

Fig. 138 Tilting drawer glass shelf

▶ Push glass shelf upwards from below on both sides. (see Fig. 138)
▶ Take out the glass shelf to the front.

Inserting glass shelf

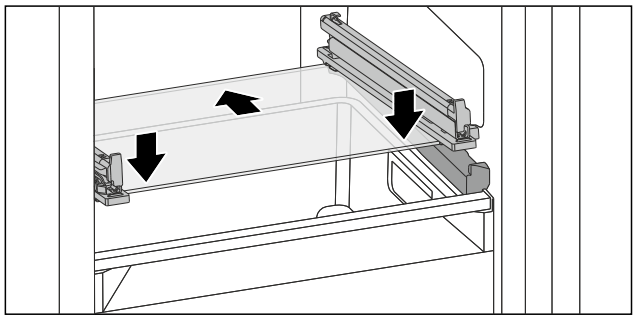

Fig. 139 Tilting drawer glass shelf

▶ Position glass shelf at an angle behind the stoppers. (see Fig. 139)
▶ Lower glass shelf.
▶ Slide in glass shelf to the back.
▷ Glass shelf clicks into place.

9.2.2 Removing / inserting the glass shelf

Depending on the equipment, the glass shelf may be located under the drawer.*

Make sure that the following requirements are fulfilled:

❑ Glass shelf under the drawer: The drawer has been removed. (see 9.1 Drawers)

Removing glass shelf

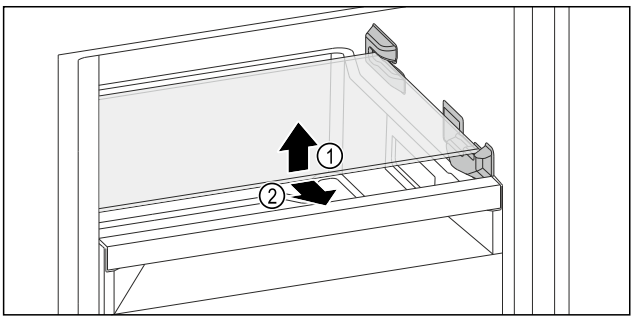

Fig. 140 Example illustration, glass shelf

▶ Lift the glass shelf forwards.
▶ Remove the glass shelf forwards.

Inserting glass shelf

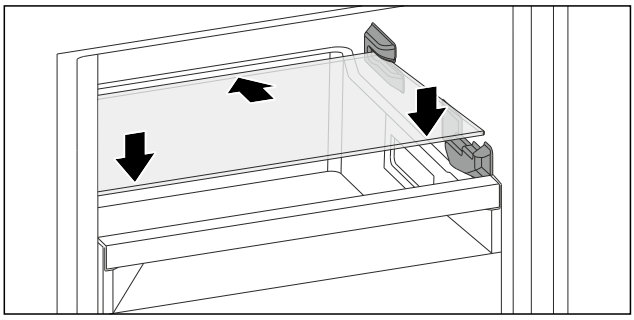

Fig. 141 Example illustration, glass shelf

▶ Place the glass shelf at an angle behind the stoppers.
▶ Lower glass shelf.
▶ Slide in glass shelf to the back.

9.3 VarioSpace

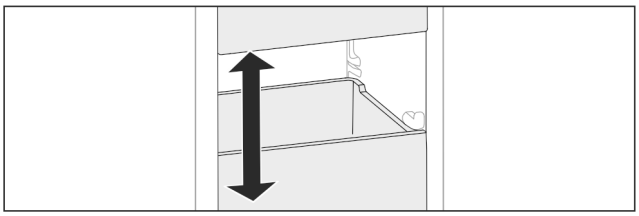

Fig. 142

You can remove drawers and glass panels from your appliance. This provides more room for large food items such as poultry, joints of meat, large game, and tall baked products. You can then freeze these items whole for later preparation.

▶ Note the weight limits on the drawers and glass panels (see 11.1 Technical specifications) .

9.4 Ice cube tray with cover

9.4.1 Using the ice cube tray

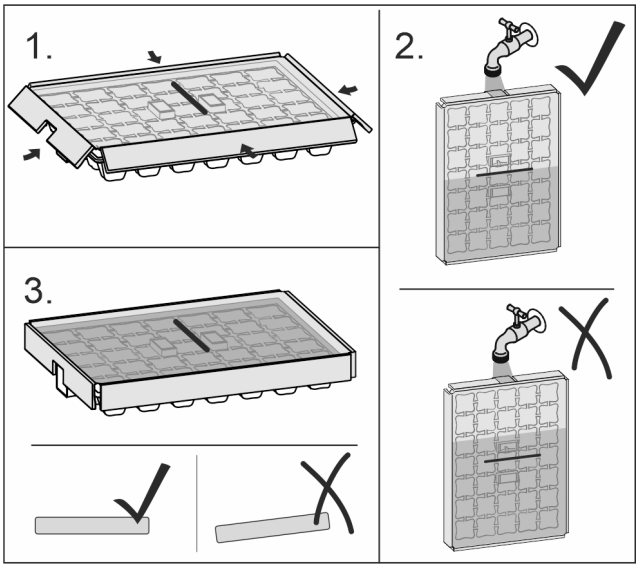

Fig. 143

When the water is frozen:

▶ Hold ice cube tray under hot water for a short time.
▶ Remove the lid.
▶ Gently turn the ends of the ice cube tray in opposite directions.
▶ Release the ice cubes.

9.4.2 Dismantling the ice cube tray

You can take the ice cube tray apart for cleaning.

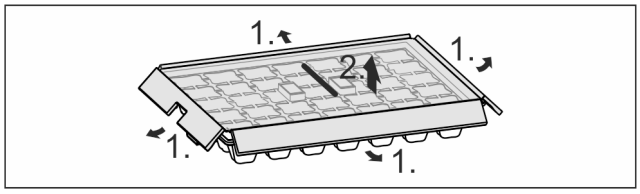

Fig. 144

▶ Disassembling the ice cube tray.

10 Maintenance

10.1 Disassembling / assembling pull-out systems

10.1.1 Notes on disassembly

You can disassemble some of the pull-out systems for cleaning. Your appliance can contain a variety of pull-out systems.

The following pull-out systems can be disassembled or cannot be disassembled:

Pull-out system	can be disassembled / cannot be disassembled
Drawer on appliance base or glass shelf	cannot be disassembled
Top tiltable drawer*	can be disassembled (see 10.1.2 Top tilting drawer*) *
Drawer guided on container rib	can be disassembled (see 10.1.3 Drawer on moulded rib)

10.1.2 Top tilting drawer*

Disassembling pull-out system

Make sure the following prerequisites are met:

❑ Drawer has been removed. (see 9.1.2 Top tilting drawer*)

❑ Glass shelf has been removed. (see 9.2 Glass shelves)

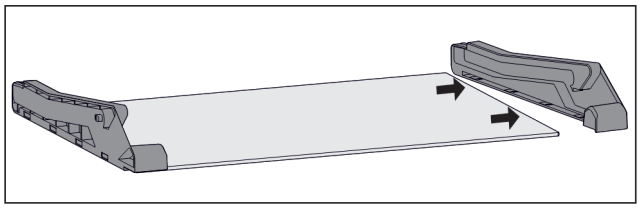

Fig. 145 Glass shelf with side parts

▶ Pull off side part from glass shelf sideways.

Installing pull-out system

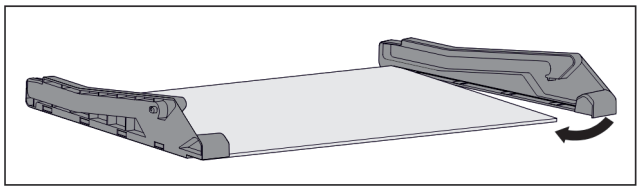

Fig. 146 Glass shelf with side parts

▶ Place on side part at the back.

▶ Press side part onto glass shelf at the front.

10.1.3 Drawer on moulded rib

Disassembling pull-out system

Make sure the following prerequisites are met:

❑ Drawer has been removed. (see 9.1.3 Drawer on moulded rib)

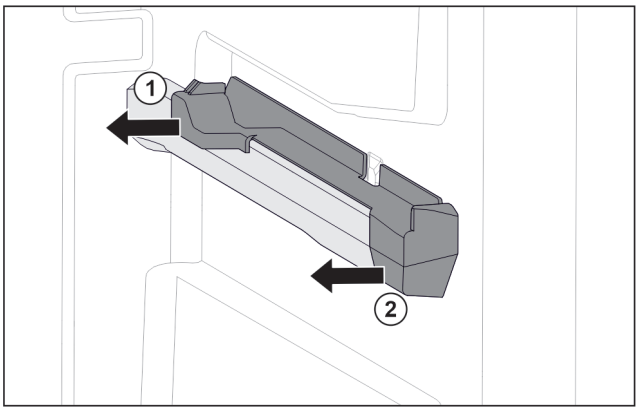

Fig. 147 Attachment on the right moulded rib

▶ Grab attachment at the back from below.

▶ Pull off attachment at the back sideways. *Fig. 147 (1)*

▶ Pull off attachment at the front sideways. *Fig. 147 (2)*

Installing pull-out system

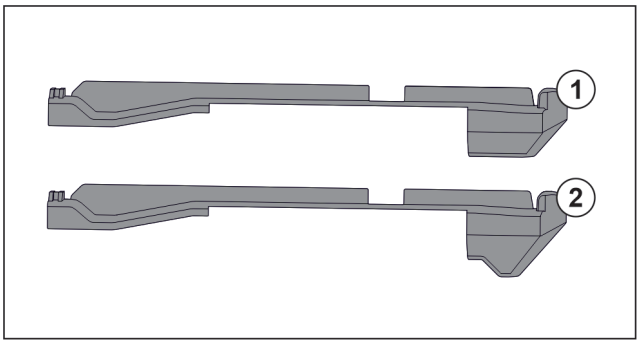

Fig. 148 Comparing attachments

There are two different attachments in the appliance. The attachment above the lowest drawer *Fig. 148 (2)* has a three-cornered edge. All other attachments *Fig. 148 (1)* have a straight edge.

▶ Fit attachment *Fig. 148 (2)* with the three-cornered edge above the lowest drawer.

▶ Fit attachment *Fig. 148 (1)* with straight edge in all other positions.

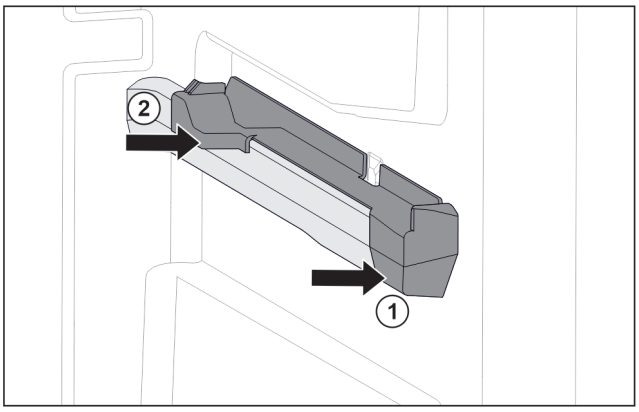

Fig. 149 Attachment on the right moulded rib

▶ Position attachment on moulded rib at the front. *Fig. 149 (1)*

▶ Press on attachment at the back. *Fig. 149 (2)*

10.2 Defrosting the appliance

10.2.1 Defrosting with NoFrost

Defrosting is performed automatically with the NoFrost system. The moisture is deposited on the evaporator, is periodically defrosted and evaporates.

The appliance does not have to be defrosted.

10.3 Cleaning the appliance

10.3.1 Preparation

WARNING
Danger of electric shock!
▶ Remove the refrigerator connector or interrupt the power supply.

WARNING
Danger of fire!
▶ Do not damage the refrigeration circuit.

▶ Empty the appliance.
▶ Unplug the mains plug.

10.3.2 Cleaning the interior

NOTICE
Improper cleaning!
Damage to the appliance.
▶ Only use soft cleaning cloths and ph-neutral all-purpose cleaners.
▶ Do not uses abrasive sponges or steel wool which may cause scratches.
▶ Do not use any sharp or abrasive cleaning agents, nor any that contain sand, chloride or acid.

▶ Plastic surfaces: clean by hand with a soft clean cloth, lukewarm water and a little detergent.
▶ Metal surfaces: clean by hand with a soft clean cloth, lukewarm water and a little detergent.

10.3.3 Clean the components

NOTICE
Improper cleaning!
Damage to the appliance.
▶ Only use soft cleaning cloths and ph-neutral all-purpose cleaners.
▶ Do not uses abrasive sponges or steel wool which may cause scratches.
▶ Do not use any sharp or abrasive cleaning agents, nor any that contain sand, chloride or acid.

Clean with a soft, clean cloth, lukewarm water and some detergent:

- Drawer
- Freezer tray

Wash in the dishwasher up to 60 °C:

- Ice cube tray

▶ To disassemble components: see the relevant section.
▶ Clean the components.

10.3.4 After cleaning

▶ Wipe the appliance and the components dry.
▶ Connect and switch on the appliance.
▶ Activate SuperFrost (see 8.2 Appliance functions) .

The temperature is cold enough:
▶ Place the food inside.
▶ Repeat cleaning regularly.

11 Customer help

11.1 Technical specifications

Temperature range	
Freeze	-28 °C to -15 °C

Maximum ice cube quantity / 24 hours	
Freezer compartment	see type plate under “Freezing capacity .../ 24 h”

Maximum component capacity			
Features	Appliance width 550 mm (see installation instructions, appliance dimensions)	Appliance width 600 mm (see installation instructions, appliance dimensions)	Appliance width 700 mm (see installation instructions, appliance dimensions)
Drawer on glass shelf (see 9.1.1 Drawer on appliance base or glass shelf)	12 kg	15 kg	--
Drawer on container rib (see 9.1.3 Drawer on moulded rib)	14 kg	19 kg	19 kg
Bottom drawer	--	11 kg	19 kg
Top tiltable drawer* (see 9.1.2 Top tilting drawer*) *	--*	19 kg*	19 kg*

Lighting	
Class[1]	Light source
This product contains one or more energy efficiency class G light sources.	LED

[1] *The appliance may contain light sources with different energy efficiency classes. The lowest energy efficiency class is indicated.*

For appliances with a WiFi connection:

Frequency specification	
Frequency band	2.4 GHz
Maximum radiated power	< 100 mW
Purpose of the wireless equipment	Integration in the local WiFi network for data communication

11.2 Operating noise

The appliance makes different noises when it is on.

- At **higher temperatures** the appliance uses less energy but works for longer. It is **quieter**.
- With **high cooling capacity**, food is cooled more quickly. The sound is **louder**.

  Examples:
  - Functions on (see 8.2 Appliance functions)
  - Fan running
  - Food recently added
  - High ambient temperature
  - Door open for a while

Noise	Possible cause	Type of noise
Bubbling and splashing	Coolant flowing into the cooling circuit.	Normal operating noise
Hissing	Coolant sprays into the cooling circuit.	Normal operating noise
Humming	The appliance is cooling. The volume depends on the cooling output.	Normal operating noise
Suction noises	Soft-closing door is being opened and closed.	Normal operating noise
Humming and rustling	The fan is running.	Normal operating noise

Noise	Possible cause	Type of noise
Clicking	Components are switched on and off.	Normal switching noise
Rattling or humming	Valves or flaps are working.	Normal switching noise

Noise	Possible cause	Type of noise	Lifting
Vibration	Improper installation	Defective noise	Check the installation. Level the appliance.
Rattling	Components, items inside the appliance	Defective noise	Secure components. Leave enough space between the items.

11.3 Technical fault

Your appliance is designed and built to ensure it works reliably and has a long service life. In the unlikely event that a fault occurs during operation, please check whether it is due to an operating error. If so, you will be charged for the callout and repair costs even if it falls within the warranty period.

You can fix the following faults yourself.

11.3.1 Appliance function

Defect	Cause	Remedy
The appliance is not working.	→ The appliance is not switched on.	▶ Switch the appliance on.
	→ The power plug is not properly plugged into the socket.	▶ Check the power plug.
	→ There is something wrong with the power outlet fuse.	▶ Check the fuse.
	→ Power cut	▶ Keep the appliance closed. ▶ Safeguarding food: Place cold packs on top of food or use another freezer if the power cut lasts longer. ▶ Do not re-freeze defrosted food,
	→ The IEC socket is not plugged into the appliance correctly.	▶ Check the IEC socket.
Temperature is not cold enough.	→ The appliance door is not closed properly.	▶ Close the appliance door.
	→ Not enough ventilation.	▶ Keep ventilation grille clear, and clean it.
	→ The ambient temperature is too high.	▶ Problem solution: (see 1.8 Climate classes)
	→ The appliance was opened too many times or for too long.	▶ Wait to see if the required temperature corrects itself. If not, contact Customer Service. (see 11.4 Customer Service)
	→ Too much fresh food was placed inside without SuperFrost.	▶ Solution: (see SuperFrost)
	→ The temperature is set incorrectly.	▶ Turn down the temperature and check after 24 hours.

Defect	Cause	Remedy
	→ The appliance is too close to a heat source (oven, radiator, etc).	▶ Move the appliance or the heat source.
	→ The appliance was not correctly installed in the recess.	▶ Check if the appliance was installed correctly and that the door closes properly.
The temperature shown on the display is higher than the actual temperature in the appliance.*	→ Appliance door was open for a long time and the door alarm was triggered automatically. This causes the appliance to cool more vigorously.	▶ Close appliance door.
The door seal is defective or needs to be replaced for another reason.	→ The door seal can be replaced. It can be replaced without the need for special tools.	▶ Contact Customer Service. (see 11.4 Customer Service)
The appliance builds up too much ice or condensation.	→ The door seal may have slipped out of its groove.	▶ Check that the door seal is well fitted in the groove.

11.3.2 Features

Defect	Cause	Remedy
The internal light does not come on.	→ The appliance is not switched on.	▶ Switch the appliance on.
	→ The door was open for longer than 15 minutes.	▶ Interior lighting switches off automatically after about 15 minutes when the door is open.
	→ The LED interior light is faulty or the lid is damaged.	▶ Contact Customer Service. (see 11.4 Customer Service)

11.4 Customer Service

First check whether you can rectify the fault yourself (see 11 Customer help) . If you cannot rectify the problem, contact Customer Service.

You can find the address in the enclosed brochure “Liebherr-Service” or at home.liebherr.com/service.

WARNING
Unprofessional repair!
Injuries.
- ▶ Have any repairs and action - not expressly specified - on the appliance and mains cable carried out by service personnel only. (see 10 Maintenance)
- ▶ A damaged mains cable may only be replaced by the manufacturer, the manufacturer’s Customer Service or a similarly qualified person.
- ▶ In the case of appliances with an IEC connector, the change may be made by the customer.

11.4.1 Contacting Customer Service

Make sure that the following appliance information is available:

- ❑ Appliance designation (model and index)
- ❑ Service no. (Service)
- ❑ Serial no. (S no.)

▶ Call up the appliance information via the display. (see Device information)

-or-

▶ Refer to the type plate for appliance information. (see 11.5 Model plate)

▶ Note down the appliance information.
▶ Notify customer service: Report errors and the appliance information.
▷ This will help us to provide you with a faster, more accurate service.
▶ Follow further instructions from Customer Service.

11.5 Model plate

The model plate is behind the drawers on the inside of the appliance.

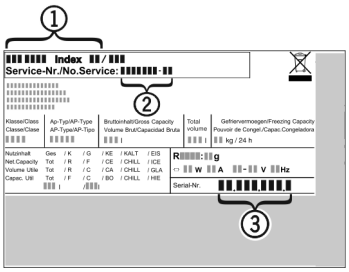

Fig. 150

(1) Appliance description **(3)** Serial no.
(2) Service no.

▶ Note the data on the model plate.

12 Shutting down

- ▶ Empty the appliance.
- ▶ Switch off appliance. (see Switching the appliance off and on)
- ▶ Pull the mains plug out of the socket.
- ▶ Remove the IEC socket if required: Pull the IEC socket out of the appliance plug and move it to the left and right at the same time.
- ▶ Clean appliance. (see 10.3 Cleaning the appliance)
- ▶ Leave the door open, so that no unpleasant odours arise.

13 Disposal

Ensure that the following requirements are met:

- ❑ Meaning of the symbols on the appliance: are familiar.
- ❑ Notes on disposal are familiar. (see 1.6 Information concerning disposal)

13.1 Preparing the appliance for disposal

- ▶ Shutting your appliance down. (see 12 Shutting down)

13.2 Disposing of the appliance in an environmentally friendly manner

WARNING
Risk of fire due to leaking refrigerant and oil!
The refrigerant inside the appliance is environmentally friendly, but flammable. The oil it contains is also flammable. Escaping refrigerant and oil can ignite in high concentrations and in contact with an external heat source.
- ▶ Do not damage the refrigerant circuit pipes or the compressor.

- ▶ Observe the notes on transporting the appliance. (see 3.5 Transporting the appliance)
- ▶ Remove the appliance without damaging it.
- ▶ Dispose of appliance according to specifications.

Scan QR Code and find digital operating and installation instructions.

home.liebherr.com

20261005 7088679-00

Liebherr-Hausgeräte GmbH
Memminger Straße 77-79
88416 Ochsenhausen
Deutschland