Operating and installation instructions

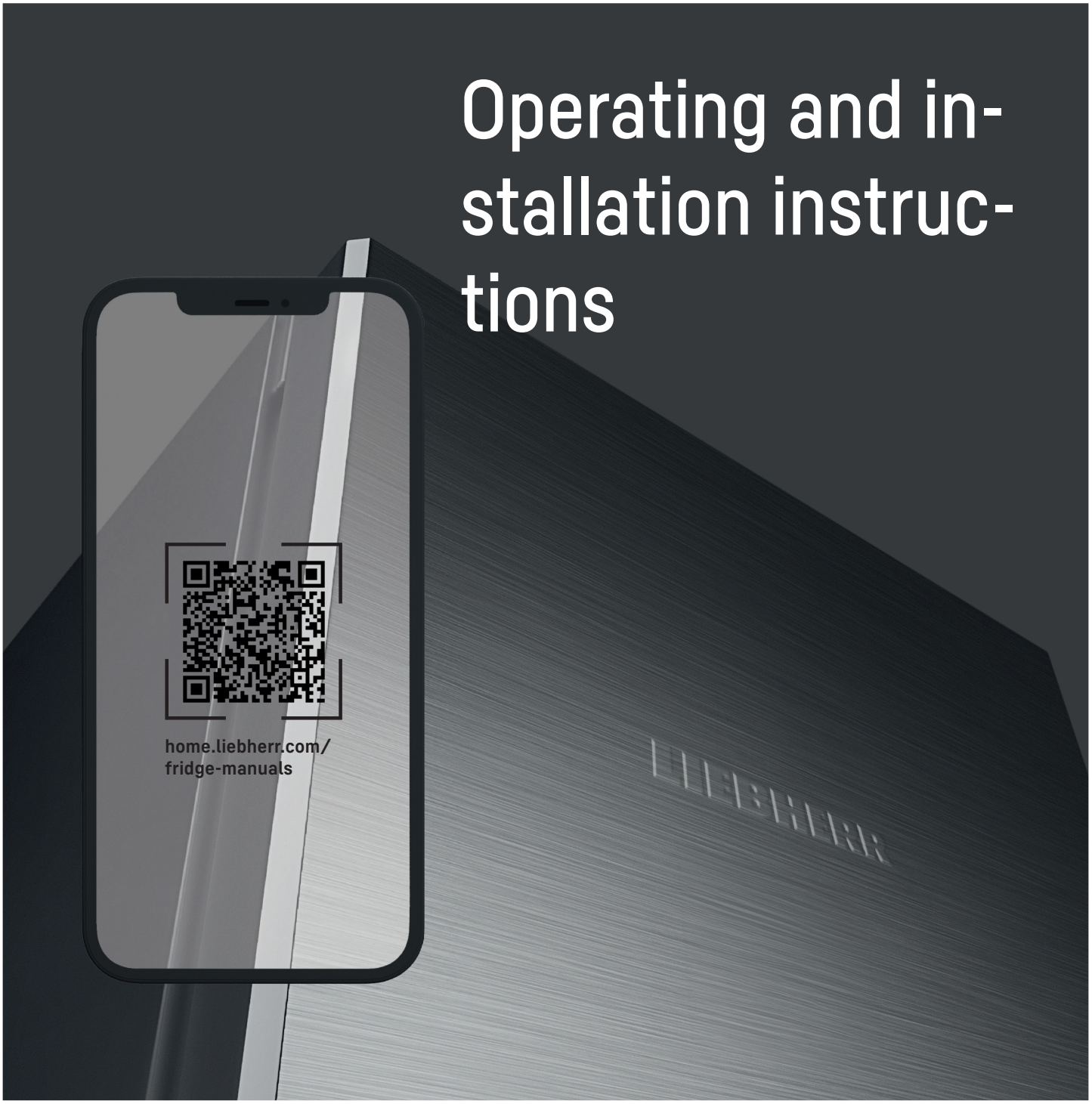

EN ORIGINAL OPERATOR'S MANUAL

LIEBHERR

Contents

1 General safety information ... 3
1.1 Intended use ... 3
1.2 Foreseeable erroneous use ... 3
1.3 User group ... 3
1.4 Warning notices – Risks for the user ... 3
1.5 Faults, damage and repairs ... 4
1.6 Information concerning disposal ... 4
1.7 Conformity ... 4
1.8 Climate classes ... 4
1.9 SVHC substances in accordance with the REACH Regulation ... 5
1.10 EPREL database ... 5
1.11 Open source licences ... 5
1.12 Spare parts ... 5
1.13 Warning levels ... 5

2 Appliance at a glance ... 5
2.1 Scope of delivery ... 5
2.2 Overview of appliances and equipment ... 5
2.3 SmartDevice ... 5

3 Setting up and connecting ... 6
3.1 Installation requirements ... 6
3.2 Appliance dimensions ... 6
3.3 Recess dimensions ... 7
3.4 Transporting the appliance ... 7
3.5 Unpacking the appliance ... 8
3.6 Explanation of symbols used ... 8
3.7 Changing the door direction ... 9
3.8 Installing multiple appliances ... 10
3.9 Installation in the niche ... 11
3.10 After installation ... 17
3.11 Connecting the appliance to the power supply ... 17
3.12 Disposing of packaging ... 18

4 Functionality of the Touch display ... 18
4.1 Navigation and symbol explanation ... 18
4.2 Menus ... 19
4.3 Sleep mode ... 19

5 Putting into operation ... 19
5.1 Switching on appliance (first use) ... 19

6 Storage ... 20
6.1 Information regarding storage ... 20
6.2 Fridge compartment ... 20
6.3 EasyFresh ... 20
6.4 Freezer compartment ... 20
6.5 Storage times ... 21

7 Saving energy ... 21

8 Controls ... 21
8.1 Controls and displays ... 21
8.1.1 Status display ... 21
8.1.2 Display symbols ... 22
8.2 Appliance functions ... 22
8.2.1 Notes on the appliance functions ... 22
Switching the appliance off and on ... 22
Switching temperature zone off and on ... 22
Temperature ... 23
SuperCool ... 23
PowerCool ... 24
SuperFrost ... 24
PartyMode ... 25
HolidayMode ... 25
SabbathMode ... 26
E-Saver ... 26
CleaningMode* ... 27
Input lock ... 27
Reminder ... 27
Temperature unit ... 28
Display brightness ... 28
WiFi ... 28
Device information ... 29
Software ... 29
Start defrosting cycle* ... 30
Door alarm ... 30
Demo mode ... 30
Resetting to factory settings ... 31
8.3 Messages ... 31
8.3.1 Overview of warnings ... 31
8.3.2 Ending warnings ... 32
8.3.3 Overview of reminders ... 32
8.3.4 Ending reminders ... 33

9 Features ... 33
9.1 Door rack ... 33
9.2 Shelves ... 34
9.3 VarioSafe * ... 36
9.4 Space for baking tray ... 38
9.5 Drawers ... 38
9.6 Compartment lid for EasyFresh Safe ... 39
9.7 Glass shelves ... 40
9.8 VarioSpace ... 40
9.9 Bottle holder ... 41
9.10 FlexCube* ... 41

10 Maintenance ... 41
10.1 FreshAir carbon filter ... 41
10.2 Removing / inserting the bottle holder ... 42
10.3 Disassembling / assembling pull-out systems ... 42
10.4 Compartment lid for EasyFresh Safe ... 42
10.5 Defrosting the appliance ... 42
10.6 Cleaning the appliance ... 43

11 Customer help ... 43
11.1 Technical specifications ... 43
11.2 Operating noise ... 44
11.3 Technical fault ... 44
11.4 Customer Service ... 45
11.5 Model plate ... 46

12 Shutting down ... 46

*** Depending on model and options**

13 Disposal..... 46
13.1 Preparing the appliance for disposal..... 46
13.2 Disposing of the appliance in an environmentally friendly manner..... 46

The manufacturer is continually working on the further development of all types and models. Please be aware that we reserve the right to make changes to the shape, equipment and technology.

Symbol	Explanation
	Read instructions Please read the information in these instructions carefully to understand all of the benefits of your new appliance.
	Additional information on the Internet The digital manual with additional information and in other languages can be found via the QR code on the front of the manual or by entering the service number at **home.liebherr.com/fridge-manuals**. The service number can be found on the serial tag: 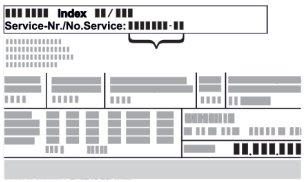 *Fig.* Example illustration
	Check appliance Check all parts for transport damage. If you have any complaints, please contact your agent or customer service.
	Differences These instructions apply to a range of models, so differences are possible. Sections that apply to certain models only are marked with an asterisk (*).
	Instructions and results Instructions are marked with a ▶. Results are marked with a ▷.
	Videos Videos about the appliances are available on the YouTube channels of Liebherr-Hausgeräte.

Open source licences:

The appliance contains software components that use open source licences. Information on the open source licences used can be found here: **home.liebherr.com/open-source-licences**

This user information applies to the following appliances:

IC(N)S..	51..
IKGNS 51Vd03	
IKGS 51Vd02	
IKGS 51Ve03	
IKGNSd 178-3	

Note
If your appliance has an N in its appliance designation, it is a NoFrost appliance.*

1 General safety information

Keep this user information in a safe place so that you can refer to it at any time.

If you pass on the appliance, pass this user information on to subsequent owners.

To use the appliance properly and safely, read this user information carefully before installation and use. Always follow the instructions, safety instructions and warnings contained therein. They are important so that you can install and operate the appliance safely and properly.

1.1 Intended use

- This appliance is intended for household use and similar applications such as:
  - in staff kitchen areas in shops, offices and other work areas
  - in agriculture and by guests in hotels, motels and other accommodation
  - bed and breakfasts
  - in catering and similar wholesale operations
- Further uses:
  - All other types of application are impermissible.

1.2 Foreseeable erroneous use

The following applications are expressly prohibited:

- Storage and cooling of:
  - Chemically unstable, flammable or corrosive substances
  - Explosive substances, such as aerosol containers with flammable propellant gas
  - Medication, blood plasma, laboratory compounds or similar substances and products subject to the Medical Device Directive 2007/47/EC
- Use in explosive areas

Improper use of the appliance will result in damage or spoilage of the stored foods.

1.3 User group

- This appliance must not be used by persons (including children) with reduced physical, sensory or mental capabilities, or by persons with a lack of experience and knowledge, unless they are supervised by a person responsible for their safety or have been given instructions on how to use the appliance. Children must be supervised to ensure that they do not play with the appliance.
- Children aged between 3 and 8 are allowed to load and unload the fridge-freezer.

1.4 Warning notices – Risks for the user

- WARNING: Keep ventilation openings in the equipment housing or in installations clear of obstructions.
- WARNING: Do not use any mechanical devices or other means to speed up the defrosting process other than those recommended by the manufacturer.
- WARNING: Do not damage the coolant circuit.
- WARNING: Do not operate electrical appliances inside the refrigerator/freezer compartment that are not of the type recommended by the manufacturer.
- WARNING: When installing the appliance, ensure that the mains lead is not trapped or damaged.
- WARNING: Do not place portable multiple sockets or power supply units at the rear of the appliance.

*** Depending on model and options**

Once the appliance has been installed, it must still be possible to disconnect it from the mains.

- Accessible mains plug (above, below or next to the appliance)
- Tripping of the fuse in the building's electrical installation in accordance with the installation regulations.

WARNING: Fire hazard/flammable substances.

The symbol is located on the compressor and may also appear in other places on the appliance. It marks the danger posed by flammable substances. Do not remove the sticker.

- The more refrigerant there is in the appliance, the larger than room must be in which it is located. In rooms that are too small, a leak can product a flammable gas/air mixture. For every 8 g of refrigerant, the installation room must be at least 1 m^3 in size. Information on the refrigerant contained is given on the type plate inside the appliance.
- Clean regularly surfaces that can come in contact with food and accessible drainage systems.
- Package raw meat or fish in clean, closed containers. This will prevent meat or fish from touching or dripping onto other food.
- If the fridge-freezer is left empty for a long period, switch it off, defrost it, clean it, dry it and leave the door open to prevent mould from forming.
- Avoid prolonged skin contact with cold surfaces or with cold food. Use gloves for protection, for example.
- Alcoholic beverages and other containers bearing alcohol must be sealed tight for storage. Any leaking alcohol may ignite due to electrical parts.
- Only open the door for a short time. This prevents the temperature inside the appliance from rising.
- Do not reach between the door and the appliance when opening and closing. Fingers may become trapped.
- Do not place any items in the front section of the bottom glass shelf to ensure that the appliance door closes properly. (see 6.2 Fridge compartment) (see 9.1 Door rack)
- WARNING: This appliance must be secured in accordance with the instruction manual to prevent any risks arising from a lack of stability.
- Follow the instructions regarding installation, fixing, required dimensions and connections. (see 3 Setting up and connecting)

1.5 Faults, damage and repairs

- Mains connection with cooling appliance plug:
  If the mains lead of this appliance is damaged, it must be replaced with a special connection line available from the manufacturer or its customer service department. The customer may make the change.
- Repairs and interventions on the appliance may only be carried out by the customer service or by other qualified personnel trained for this purpose.
- In the event of malfunctions and appliance faults, pull out the mains plug or switch off the fuse. Always hold the plug when pulling out the mains plug. Never tug on the cable.

1.6 Information concerning disposal

The crossed-out rubbish bin symbol is a note that the appliance must not be disposed of with unsorted household waste and must be placed in a separate collection. It contains recyclable materials and may be reusable.

The symbol may be found on the compressor. It pertains to the oil in the compressor and indicates the following danger: **Can be fatal if swallowed or with penetration of the respiratory tract.** This information is only significant for recycling. No risk exists with normal use.

This or a similar sticker may be on the rear of the appliance. It indicates that there are vacuum insulation panels (VIP) or perlite panels in the door and/or housing. This information is only significant for recycling. Do not remove the sticker.

- The old appliance must be properly and therefore professionally disposed of in accordance with the local applicable regulations and legislation. When transporting the old appliance do not damage the refrigerant circuit, so that the refrigerant inside (information on the type plate) and the oil do not leak out uncontrolled.
- Please note that it is the customer's responsibility to delete any personal data that may be held.
- For Germany: The appliance can be disposed of free of charge via the class 1 collection containers at the local recycling/reusable material centres. When purchasing a new refrigerator/freezer and a sales area > 400 m^2, the old appliance is also taken back free of charge via the trade.
- EU: Please check with your local authorities to find out how to dispose of old appliances.

1.7 Conformity

The coolant circuit has been tested for leak-tightness. When installed, the appliance complies with the relevant safety regulations and directives.

For the EU market:	The appliance complies with Directive 2014/53/EU.
For GB market:	The appliance complies with the Radio Equipment Regulations 2017 SI 2017 No. 1206.

The full text of the EU Declaration of Conformity is available at the following web address: www.liebherr.com

1.8 Climate classes

Depending on its climate class, the appliance is designed for operation within certain ambient temperature limits. The climate class for your appliance is printed on the type plate.

Note

▶ In order to guarantee fault-free operation comply with the specified ambient temperatures.

Climate class	for ambient temperatures from
SN	10 °C to 32 °C
N	16 °C to 32 °C
ST	16 °C to 38 °C

Climate class	for ambient temperatures from
T	16 °C to 43 °C
SN-ST	10 °C to 38 °C
SN-T	10 °C to 43 °C

1.9 SVHC substances in accordance with the REACH Regulation

- You can use the following link to check whether your appliance contains SVHC substances in accordance with the REACH Regulation: https://go.liebherr.com/z3eewm

1.10 EPREL database

- From 1 March 2021, the information on energy labelling and eco-design requirements will be available in the European product database (EPREL). The product database can be accessed via the following link https://eprel.ec.europa.eu/. Here, you are asked to enter the model identifier. You will find the model identifier on the type plate.

1.11 Open source licences

- The appliance contains software components that use open source licences. Information on the open source licences used can be found here: home.liebherr.com/open-source-licences

1.12 Spare parts

- The spare parts availability for functional parts and stockable parts of the equipment is 15 years.

1.13 Warning levels

⚠ **DANGER**	Identifies an immediately dangerous situation that will result in death or serious bodily injuries if it is not prevented.
⚠ **WARNING**	Identifies a dangerous situation that could result in death or serious bodily injury if it is not prevented.
⚠ **CAUTION**	Identifies an immediately dangerous situation that could result in slight or moderate injuries if it is not prevented.
ATTENTION	Identifies a hazardous situation that could result in property damage if it is not prevented.
Note	Identifies useful information and tips.

2 Appliance at a glance

2.1 Scope of delivery

Check all parts for transport damage. Contact your dealer or customer service in the event of complaints. (see 11.4 Customer Service)

Your new appliance comes with the following parts:

- Built-in appliance
- Features (depending on the model)
- Installation materials (depending on the model)
- "Quick Start Guide"
- "Installation Guide"*
- Service Brochure

2.2 Overview of appliances and equipment

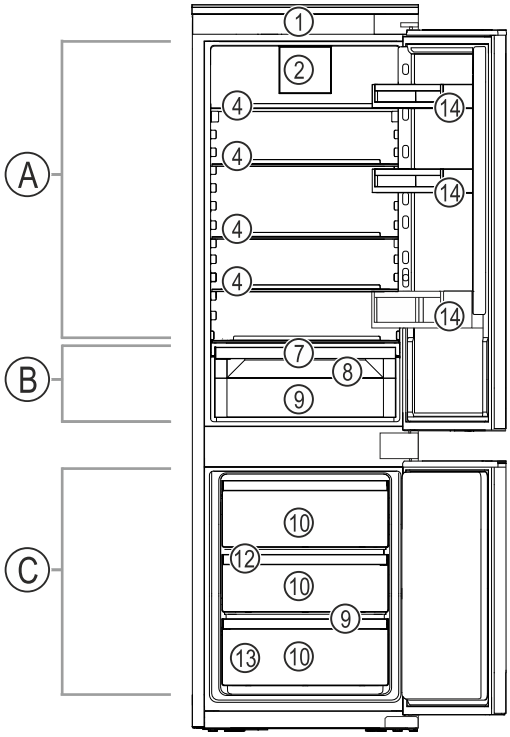

Fig. 1 Example illustration

Temperature range

(A) Fridge compartment
(B) EasyFresh
(C) Freezer compartment

Equipment

(1) Controls
(2) Fan with FreshAir activated charcoal filter
(3) Divisible storage shelf*
(4) Storage shelf
(5) VarioSafe*
(6) IceMaker water tank*
(7) Lid for EasyFresh safe
(8) Drain hole
(9) EasyFresh safe
(10) Freezer drawer
(11) IceMaker*
(12) VarioSpace
(13) Type plate
(14) Door shelf

2.3 SmartDevice

SmartDevice is the networking solution for your fridge-freezer.

If your appliance SmartDevice-enabled or compatible, you can quickly and easily connect your appliance to your WiFi. With the SmartDevice app, you can operate your appliance from a mobile device. Additional functions and setting options are available in the SmartDevice SmartDevice app.

SmartDevice-compatible appliance:	Your appliance is compatible for use with the SmartDeviceBox. You must first purchase and install the SmartDeviceBox. In order to connect your appliance to the WiFi, you need to download the SmartDevice app.
More information about SmartDevice:	**smartdevice.liebherr.com**

Purchasing the SmartDeviceBox in the Liebherr-Hausgeräte store: **home.liebherr.com/shop/de/deu/smartdevicebox.html**

Downloading the SmartDevice app:

After installing and configuring the SmartDevice app, you can connect your appliance to your Wi-Fi (see WiFi) using the SmartDevice app and the appliance's Wi-Fi function.

Note
The SmartDevice function is not available in the following countries: Russia, Belarus, Kazakhstan.

You cannot use the SmartDeviceBox.

3 Setting up and connecting

3.1 Installation requirements

The installation conditions are crucial to ensure that you can operate your appliance safely, efficiently and without problems.

- Observe all safety instructions.
- Consider the location and position in the room.

WARNING
Danger of fire due to incorrect positioning!
If the mains cable or plug touches the back of the appliance, the vibration can damage the mains cable or the plug resulting in a short circuit.

▶ Make sure the mains cable is not trapped under the appliance when you position the appliance.
▶ Stand the appliance so that it is not touched by connectors or main cables.
▶ Do not connect any appliances to sockets in the area of the back of the appliance.
▶ Do **not** place and operate multi-sockets/power distributors and other electronic devices (such as halogen transformers) at the back of the appliances.

WARNING
Fire hazard due to dampness!
If live parts or the mains lead become damp this may cause short circuits.

▶ The appliance is designed for use in enclosed areas. Do not operate the appliance outdoors or in areas where it is exposed to splash water or damp conditions.

WARNING
Risk of fire due to leaking refrigerant and oil!
The refrigerant inside the appliance is environmentally friendly, but flammable. The oil it contains is also flammable. Escaping refrigerant and oil can ignite in high concentrations and in contact with an external heat source.

▶ Do not damage the refrigerant circuit pipes or the compressor.

3.1.1 Installation site

- Only set up and use the appliance in enclosed spaces.
- Only operate the appliance when it is installed.
- If the appliance is installed in a very damp environment, condensation may form on the appliance exterior. Always make sure there is good ventilation and aeration at the installation site.
- The more refrigerant there is in the appliance, the larger than room must be in which it is located. In rooms that are too small, a leak can product a flammable gas/air mixture. For every 8 g of refrigerant, the installation room must be at least 1 m^3 in size. Information on the refrigerant contained is given on the type plate inside the appliance.
- The floor on which the appliance stands must be horizontal and level.

3.1.2 Position in space

- Do not install the appliance in direct sunlight or near radiators or similar sources of heat.
- You can install the appliance directly next to an oven.
- If the appliance is installed directly next to an oven, the energy consumption may increase slightly. This is dependent on the service life and usage intensity of the oven.
- Only fit the appliance into solid units.
- Use in hazardous areas is not permitted.

3.2 Appliance dimensions

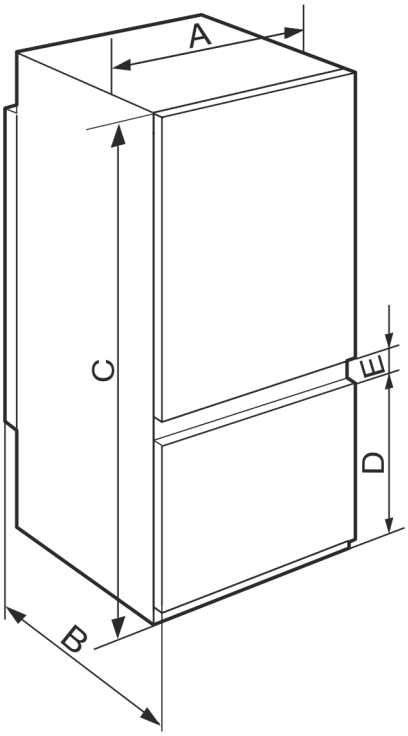

Fig. 2

IC(B)(N)S.. 51.2 / IKGS 51Vd02	
A (mm)	541
B (mm)	545
C (mm)	1770
D (mm)	523

*** Depending on model and options**

IC(B)(N)S.. 51.2 / IKGS 51Vd02	
E (mm)	67

Niche height 1780 - combinations with 2 freezer compartments

IC(B)(N)S.. 51.3 / IKGS 51Ve03 / IKGBNS 51Vd23 / IKGNS 51Vd03	
A (mm)	541
B (mm)	545
C (mm)	1770
D (mm)	669
E (mm)	67

Niche height 1780 - combinations with 3 freezer compartments

3.3 Recess dimensions

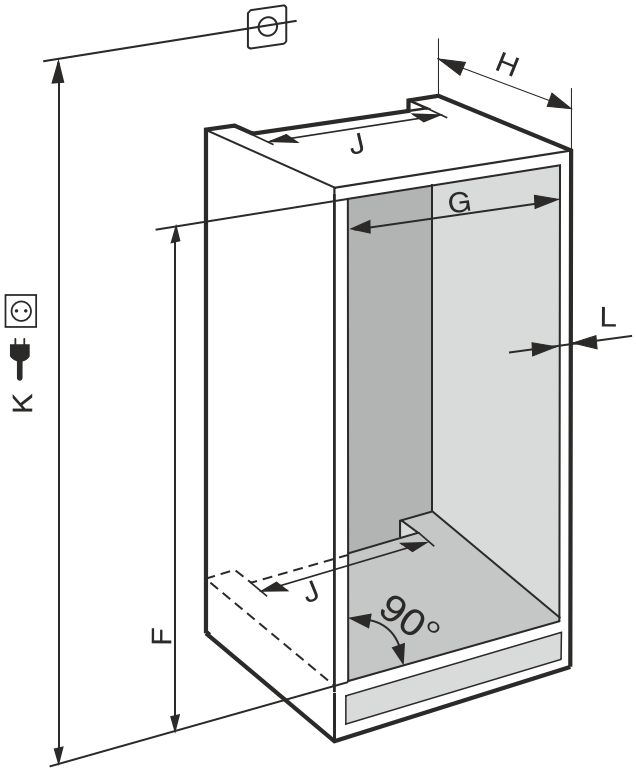

Fig. 3 ***(K):*** *max. 2100 mm*

Observe the following information for devices with a fixed water connection:

- Water connection
- Connecting the device to the water supply

IC(B)(N)..(i) 51.. / ICBNbsci 5173 / IKG 51Ve03 / IKGN 51Vc03 / ICNbsci 5173 / IKGN 51Ve03 / IKGBN 51Vd23i / IR(B)(P)..(i) 51.. / IRD..i 51.. / IRBbsci 5170 / IRBbsci 5171 / IRBPbsci 5170 / IKB 51Vc50i / IKB 51Vc51i / IK 51Vd00 / IK 51Ve00 / IK 51Ve01 / IK(B).. 1780 / IK(B).. 1784 / IKGNc 1783 / SICN..i 51.. / SIFN..(i) 51.. / SIFNbsdi 51.. / SIGN 51Vd28 / IC(B)Ndx 5173	
F (mm)	1772 to 1788
G (mm)	560 to 570
H (mm)	min. 550, recommended 560

IC(B)(N)..(i) 51.. / ICBNbsci 5173 / IKG 51Ve03 / IKGN 51Vc03 / ICNbsci 5173 / IKGN 51Ve03 / IKGBN 51Vd23i / IR(B)(P)..(i) 51.. / IRD..i 51.. / IRBbsci 5170 / IRBbsci 5171 / IRBPbsci 5170 / IKB 51Vc50i / IKB 51Vc51i / IK 51Vd00 / IK 51Ve00 / IK 51Ve01 / IK(B).. 1780 / IK(B).. 1784 / IKGNc 1783 / SICN..i 51.. / SIFN..(i) 51.. / SIFNbsdi 51.. / SIGN 51Vd28 / IC(B)Ndx 5173	
J (mm)	min. 500
L (mm)	max. 19

The specified energy consumption was determined with a kitchen unit depth of 560 mm. The appliance will work properly at a kitchen unit depth of 550 mm, but with a slightly higher energy consumption.

▶ Check the wall thickness of adjacent cabinets: They must have a minimum of 16 mm .
▶ Only fit the appliance into stable, solid kitchen units. Secure the unit against tipping.
▶ Align the cabinets with a spirit level and a try square. If necessary, level them by putting something underneath them.
▶ Make sure floor and the side panels of the cabinet are at right angles to each other.

3.3.1 Ventilation requirements

NOTICE
Covered vents!
Damage. Appliance can overheat, which can reduce the service life of various parts of the appliance and lead to operational impairments.

▶ Always make sure there is good ventilation.
▶ Always keep vents or ventilation grids in the appliance housing and in the kitchen furniture (fully integrated appliance) unobstructed.
▶ Always keep the fan air vents unobstructed.

Always follow the required ventilation gaps:

- The depth of the ventilation shaft at the back of the cabinet must be at least 38 mm.
- At least 200 cm^2 is required for the ventilation gap cross sections in the plinth and the housing cabinet.
- As a rule, the larger the ventilation cross-section, the more efficiently the appliance will run.

Sufficient ventilation is required for the operation of the appliance. The ventilation grids provided ensure an effective ventilation cross-section on the appliance of 200 cm^2. If you replace the ventilation grids with a cover plate the ventilation cross-section must be as least as large as the ventilation grid provided by the manufacturer.

3.4 Transporting the appliance

3.4.1 Transporting the appliance for initial use

Ensure that the following requirements are met:

❑ The appliance is packaged.
❑ The appliance is upright.

▶ Transport the appliance with the help of two people.
▶ Unpacking the appliance. (see 3.5 Unpacking the appliance)

3.4.2 Transporting the appliance after initial use

Observe the following instructions if you wish to transport or move the appliance again after initial use.

Ensure that the following requirements are met:

- ❑ The appliance is emptied.
- ❑ The appliance is upright.
- ❑ Appliance with door(s): Door is secured against accidental opening.
- ❑ Appliance with telescopic unit: The telescopic unit is secured against accidental opening.
- ❑ Appliance is removed.

▶ Transport the appliance with the help of two people.

3.5 Unpacking the appliance

NOTICE
Risk of damage if the unit is moved!
If you move the unit across the floor without any protection, it may damage the floor.
▶ Make sure you cover the floor properly before removing the packaging from the unit.

▶ Check the appliance and packaging: If you suspect that the goods have been damaged in transit, please contact the supplier before connecting them.

NOTICE
Damage to property caused by pointed or sharp objects!
Using pointed or sharp objects when removing packaging material may damage the appliance.
▶ Do not use any pointed or sharp objects to remove the packaging material.

▶ Remove the packaging materials.

3.6 Explanation of symbols used

	There is a danger of injury during this step! Observe the safety instructions!
	The instruction is valid for several models. Only perform this step if it applies to your appliance.
	For installation, please refer to the detailed description in the text section of the instructions.
	Section is valid for either a single-door appliance or a double-door appliance.
	Choose between the following options: Appliance with door hinge on the right or appliance with door hinge on the left.
	Installation step required for IceMaker and/or InfinitySpring.
	Only loosen or lightly tighten the screws.
	firmly tighten the screws.
	Check whether the following step is necessary for your model.
	Check that the components used are correctly installed/fitted.
	Measure the specified dimension and correct if necessary.
	Tool for installation: Metre stick
	Tool for installation: Cordless screwdriver and use A lengthwise bit insert is recommended for good access to the screws.
	Tool for installation: Spirit level
	Tool for installation: Open-end wrench with AF 7 and AF 10
	Two people are required for this step.
	The step takes place at the marked location on the appliance.
	Aid for installation: String
	Aid for installation: Protractor
	Aid for installation: Screwdriver

* Depending on model and options

	Aid for installation: Scissors
	Aid for installation: Marking pen, wipeable
	Included: Remove components
	Dispose of components that are no longer required in accordance with local regulations.

3.7 Changing the door direction

Tool

Fig. 4

WARNING
Danger of injury if the door falls out!
If the fixing parts are not screwed in sufficiently the door may fall off. This may lead to serious injuries. In addition, the door may not close, thus impairing the cooling performance of the appliance.
▶ Screw the upper and lower bearing brackets firmly to 4 Nm.

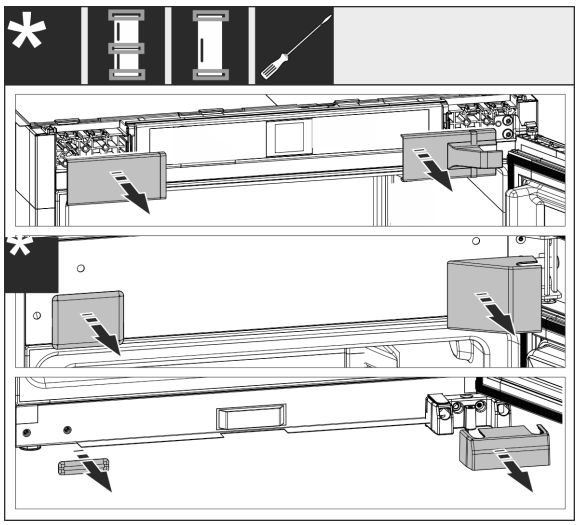

Fig. 5
▶ Remove any mounted covers, if necessary, use a slotted screwdriver to lift them off.

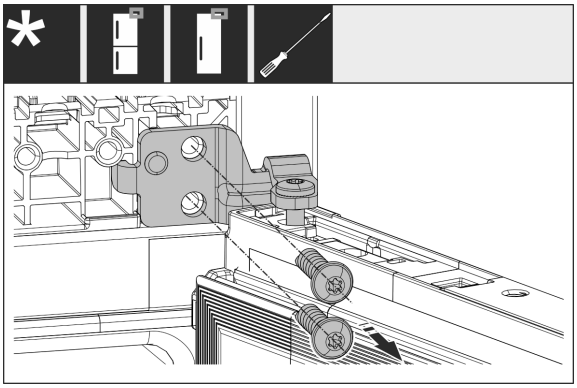

Fig. 6
▶ Loosen the screws on the bearing block. Secure the door against falling out.

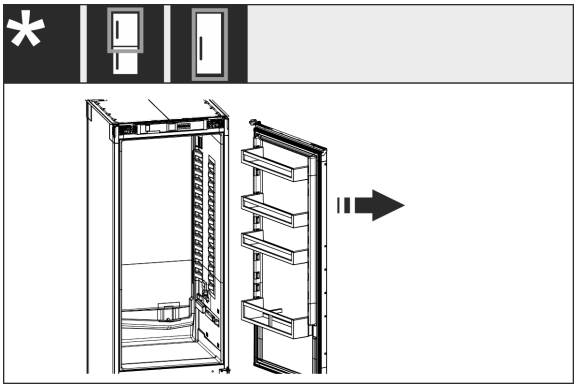

Fig. 7
▶ Remove the door together with the still screwed-on bearing bracket.

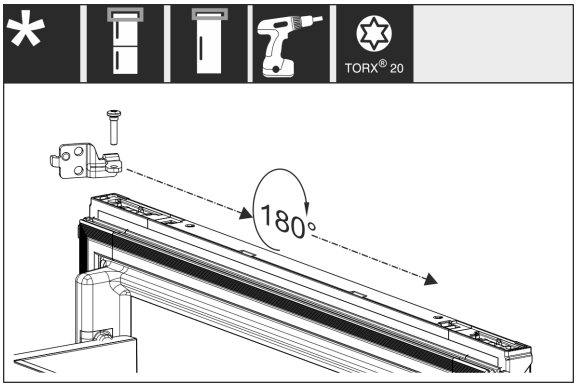

Fig. 8
▶ Turn and shift the bearing block by 180°.

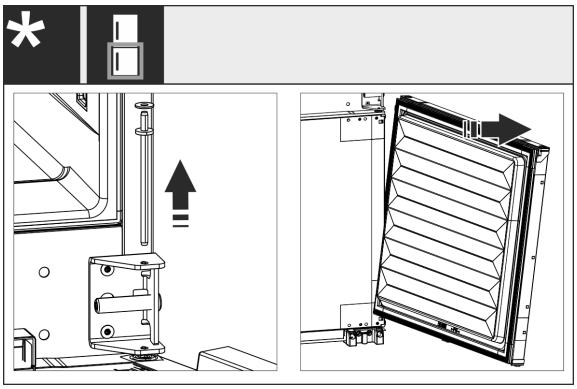

Fig. 9
▶ Remove the lower door: Pull out the middle bearing bolt with the disc. Secure the door against tipping out. Lift the door up.

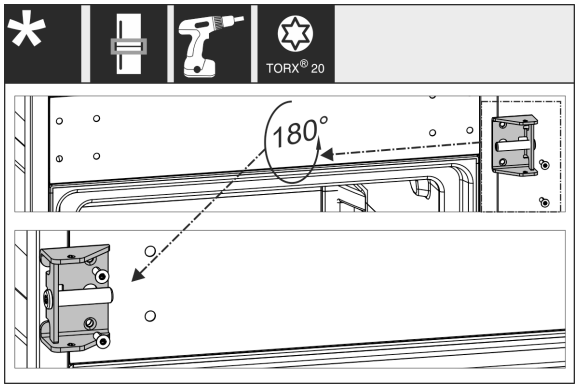

Fig. 10

▶ Shift the middle bearing block and screw it tightly.

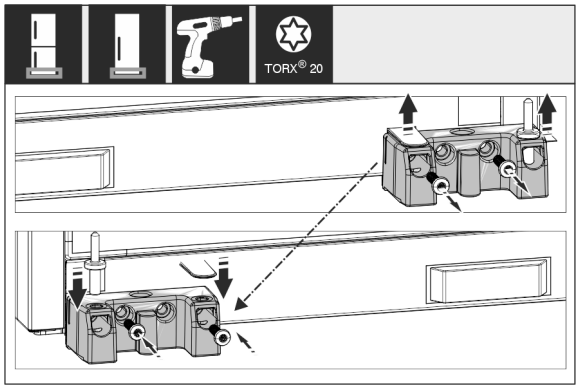

Fig. 11

▶ Shift the bottom bearing block and screw it tightly.

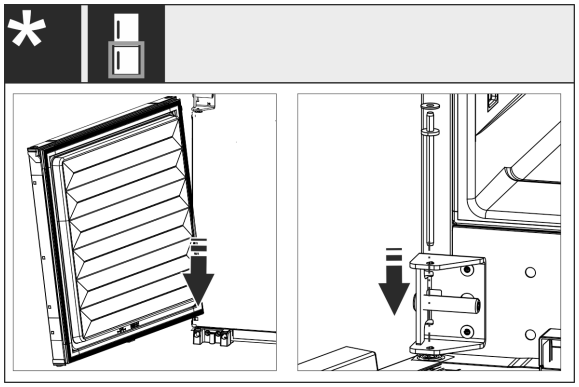

Fig. 12

▶ For combined units: Mount the lower door: Place on the hinge bolt at the bottom and rotate into place at the top. Insert the middle bearing bolt into the door from above through the middle bearing block.

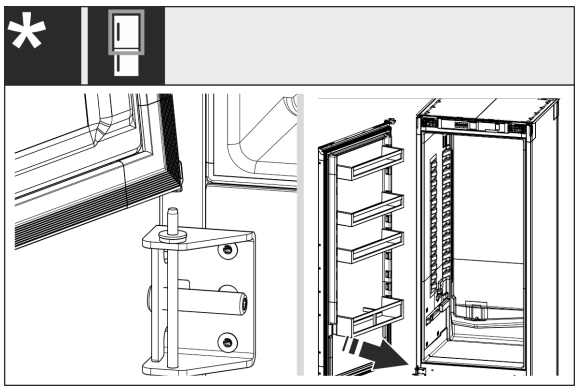

Fig. 13

▶ For combined units: Mounting the top door: Place at the bottom of the middle bearing bolt.

▶ For single-door appliances: Fitting the door: Place it on the bearing pin at the bottom.

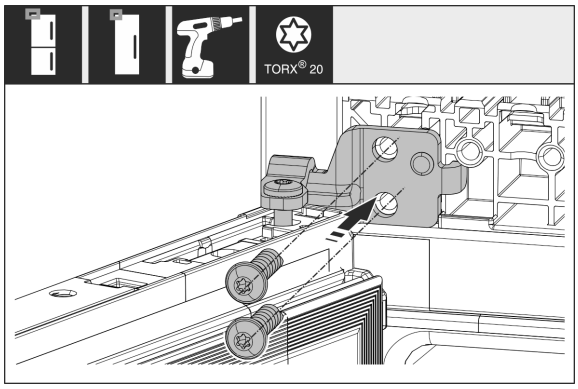

Fig. 14

▶ Screw the top bearing block to the housing.

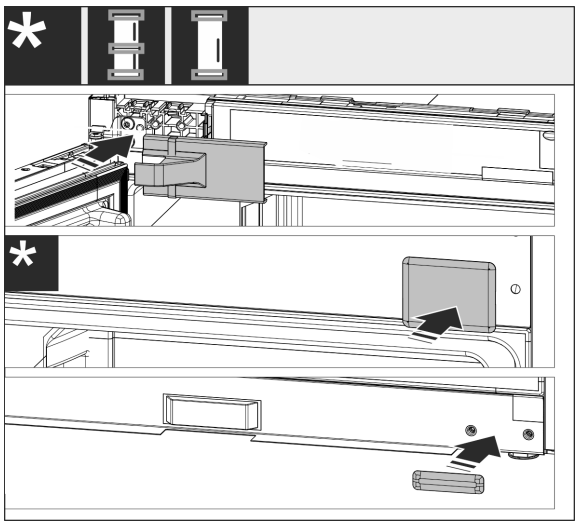

Fig. 15

▶ Refit the covers on the handle side. Reinstall the covers on the hinge side only once the appliance is installed in the cabinet.

▶ Check all screws and retighten if necessary.

3.8 Installing multiple appliances

The appliances have been developed for different installation methods. If you wish to install several appliances next to each other or on top of each other, ensure that the following requirements are met:

- ❑ Only install appliances next to or on top of each other if they have been developed for this.
- ❑ Observe notices and the following table.

NOTICE

Risk of damage due to condensate!

▶ Do not place the appliance directly next to another cooling/refrigeration unit.

NOTICE

Risk of damage due to condensation!

▶ Do not place the appliance directly on top of another cooling/refrigeration unit.

Model	Installation method
All models	Standalone
Models with a model designation starting with **S...**.	Side-by-Side (SBS)

Model	Installation method
Models up to a maximum niche height of 880 mm and with a heated ceiling can be installed “on top of each other”. Top appliance: up to a maximum niche height of 140 mm	On top of each other

Models and their installation method

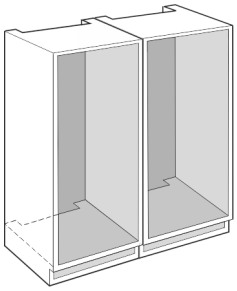

Fig. 16

Install each appliance into a separate unit niche.

3.9 Installation in the niche

The appliance is installed in the niche per these main steps:
- Provide tools.
- Check the mounting parts in the accessory pack.
- Prepare the niche.
- Prepare the mains connection.
- Prepare the appliance.
- Align the appliance.
- Secure the appliance.
- Insert the levelling rail.
- Fit the unit fronts.
- Check the installation.
- Attaching the covers.

3.9.1 Provide tools

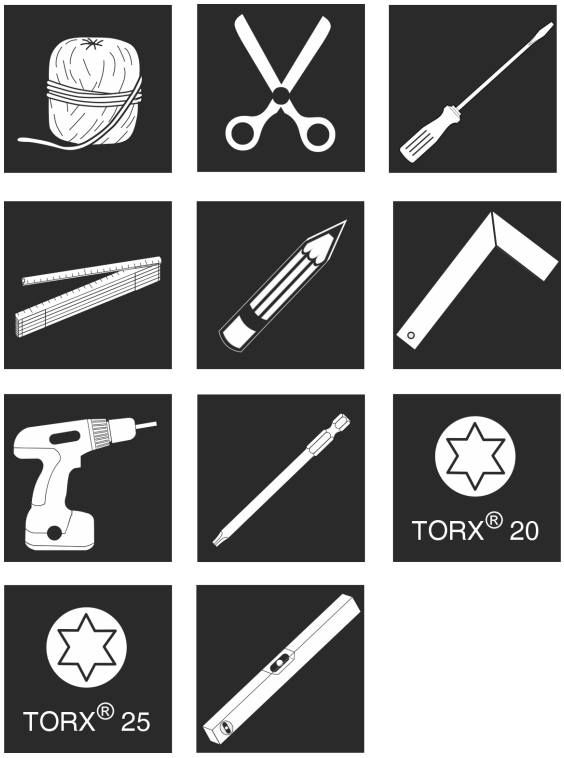

Fig. 17

3.9.2 Check the mounting parts in the accessory pack

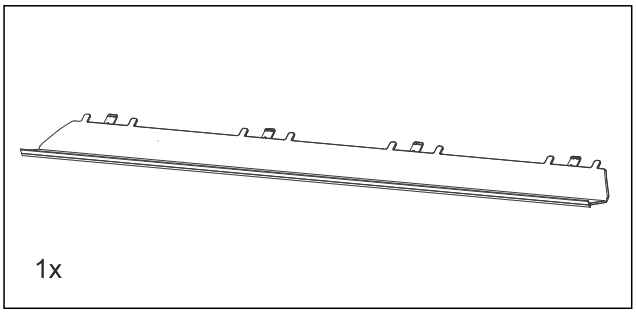

Fig. 18

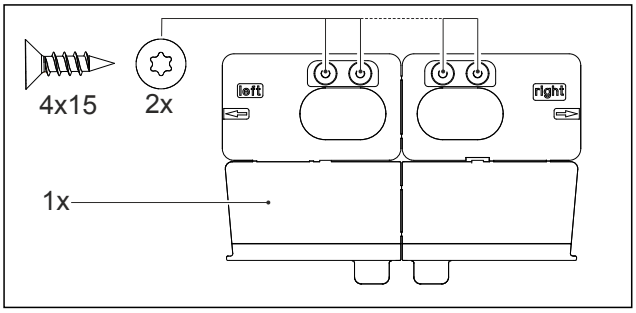

Fig. 18

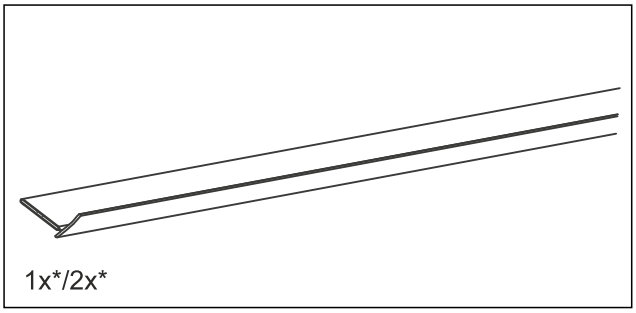

Fig. 18

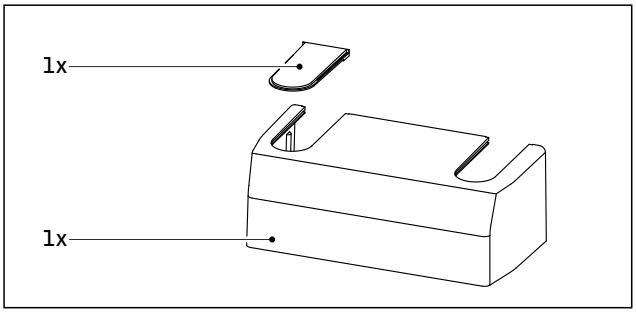

Fig. 18

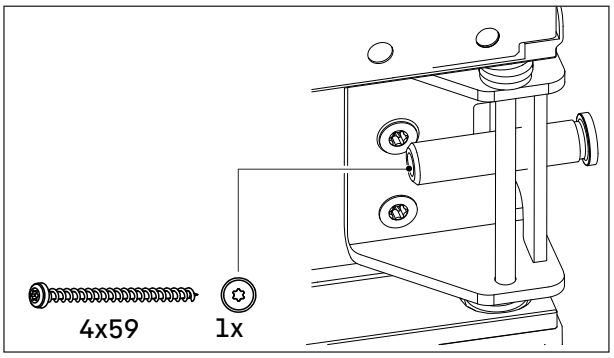

*Fig. 19 **

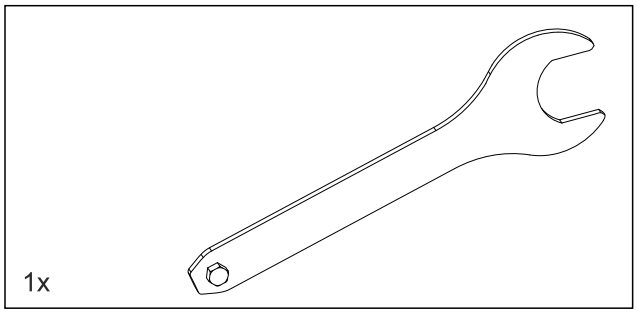

Fig. 20

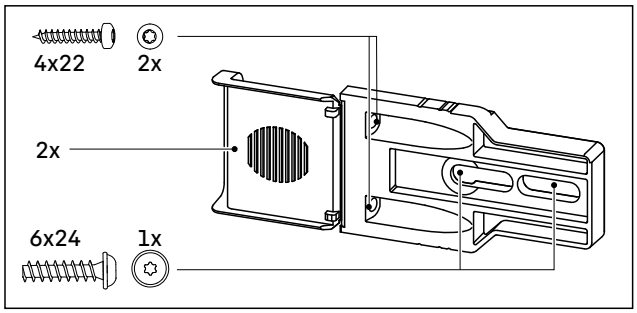

Fig. 21

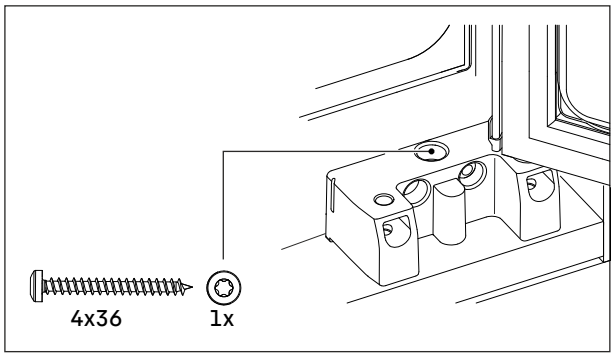

Fig. 22

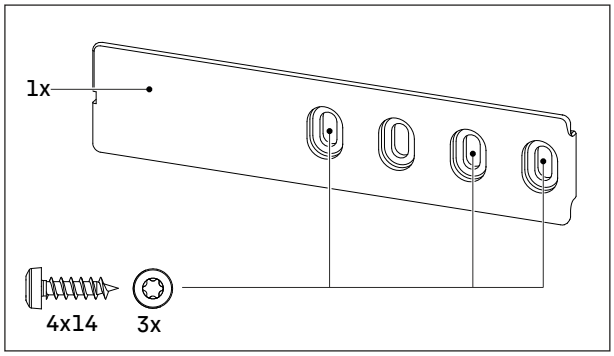

Fig. 23

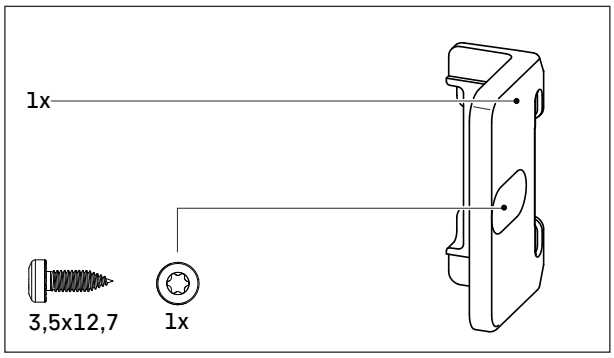

Fig. 24

3.9.3 Preparing the niche

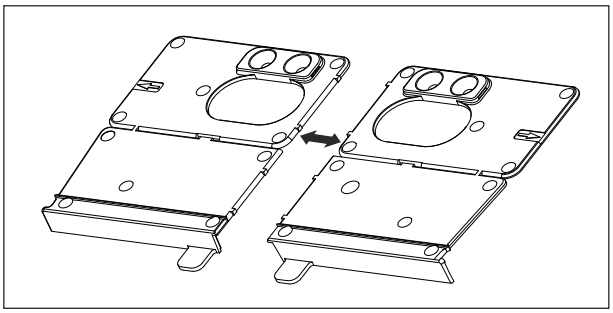

Fig. 25

▶ Separate the installation aid at the perforation.

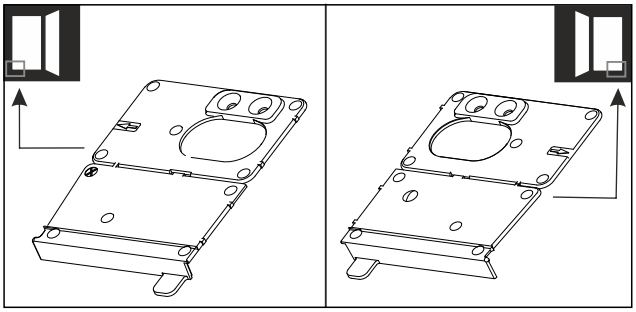

Fig. 26

NOTICE

Incorrect installation depth of the appliance.

▶ When you install the appliance: Use the installation aid.

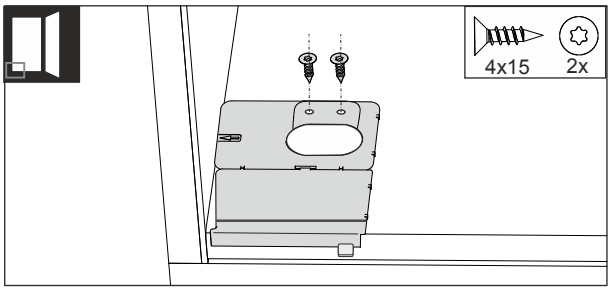

Fig. 27

Door hinge on the right:

▶ Screw the installation aid to the left on the base of the recess.

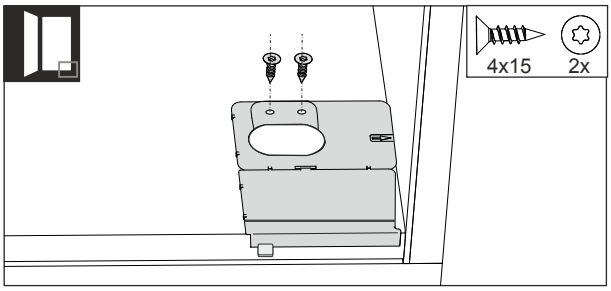

Fig. 28

Door hinge left:

▶ Screw the installation aid to the right onto the base of the recess.

▷ Mounting bracket sits flush against the cabinet side panel.

*** Depending on model and options**

3.9.4 Preparing the mains connection

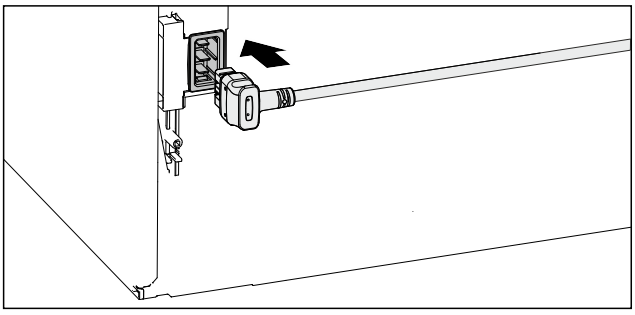

Fig. 29

▶ Remove the mains cable from the package.
▶ Plug the mains cable's IEC socket completely into the appliance plug on the back of the appliance.
▷ The IEC socket is firmly seated in the appliance plug.

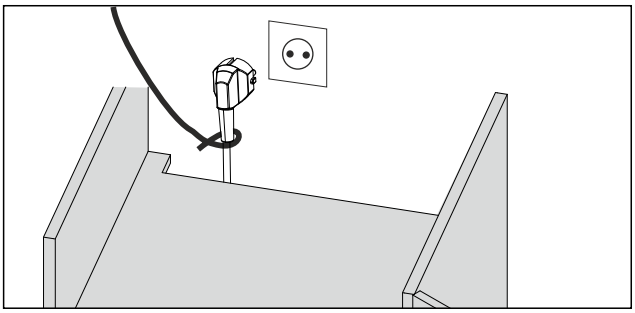

Fig. 30

▶ Use a cord to route the mains connection cable to a freely accessible socket.
▷ The mains connection cable can be plugged into the socket after the appliance has been installed.

3.9.5 Preparing the appliance

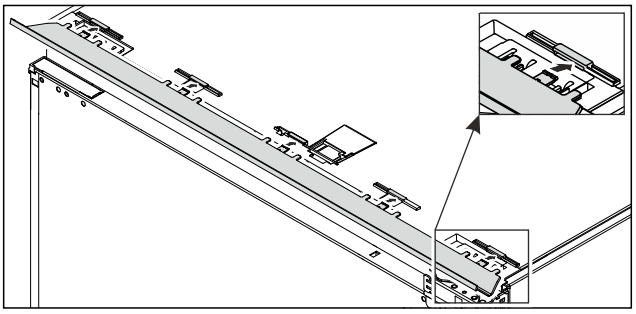

Fig. 31

▶ Insert the finishing trim on the top of the appliance.
▷ The trim panel can be moved to both sides.

WARNING

Risk of fire due to short circuit!

▶ When you push the appliance into the niche: do not kink, jam or damage the mains cable.
▶ The appliance must not be operated with a defective mains cable.

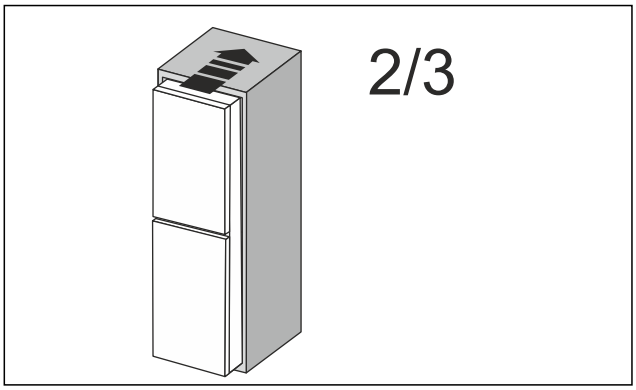

Fig. 32

▶ Push the appliance two thirds of the way into the niche.

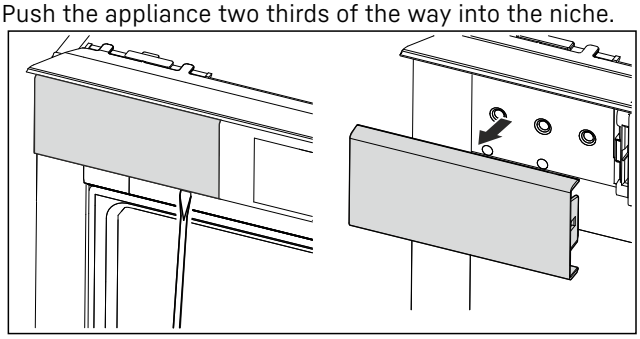

Fig. 33

▶ Open the door.
▶ Unlatch the cover at the top left.
▶ Remove the cover.

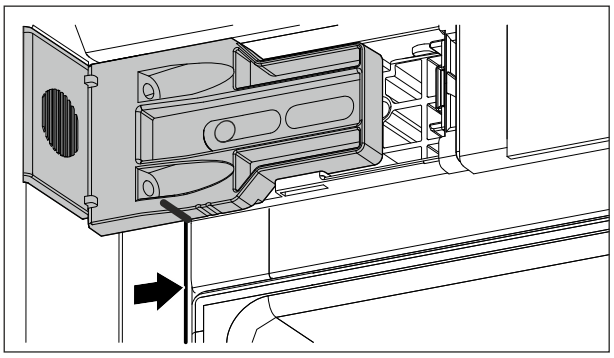

Fig. 34

▶ Position the mounting bracket.
▷ The lower marking of the mounting bracket is on the joint of the housing.

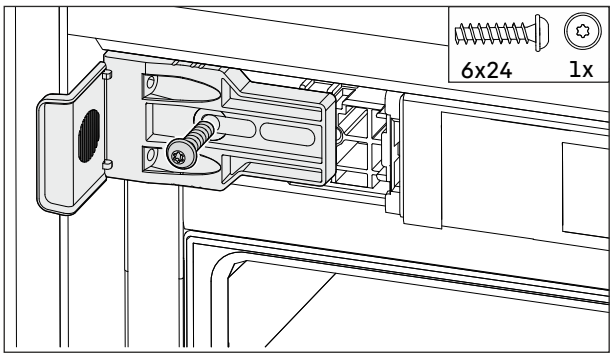

Fig. 35

▶ Screw on the bracket loosely.
▷ The bracket can be moved.
▶ Close the door.

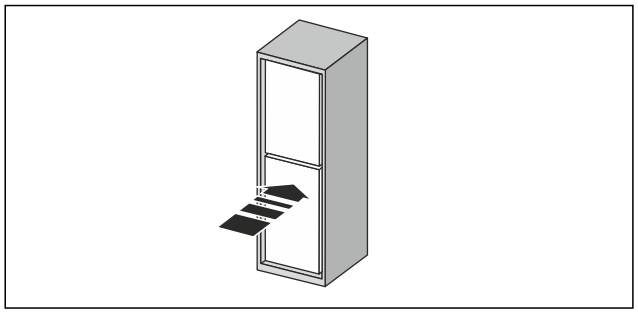

*Fig. 36 **

▶ Push the appliance completely into the recess.

3.9.6 Aligning the appliance

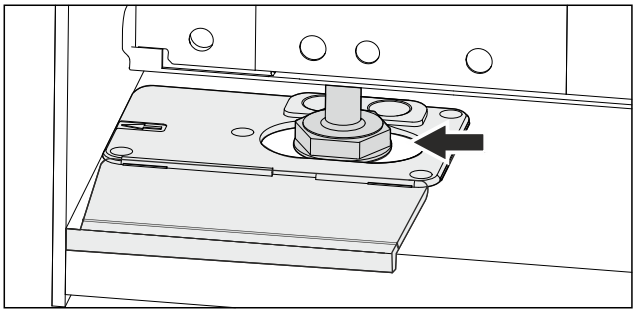

Fig. 37

▶ Position the adjustable foot in the recess of the installation aid.
▶ Open the door.

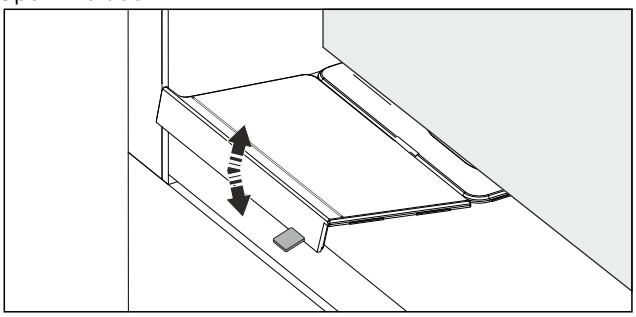

Fig. 38

▶ Release the installation aid by moving it.
▶ If necessary, tear it off with pliers.

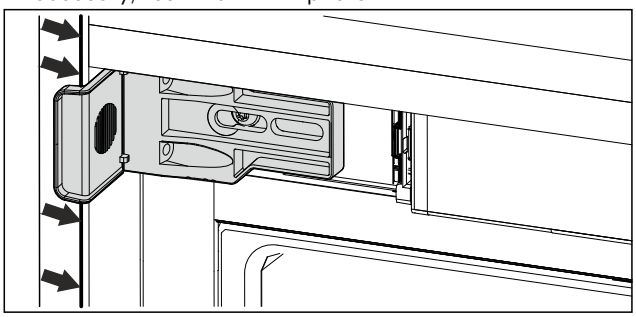

Fig. 39

▶ Check that the appliance is level in the niche.
▷ The mounting bracket at the top left rests firmly against the side wall of the niche.

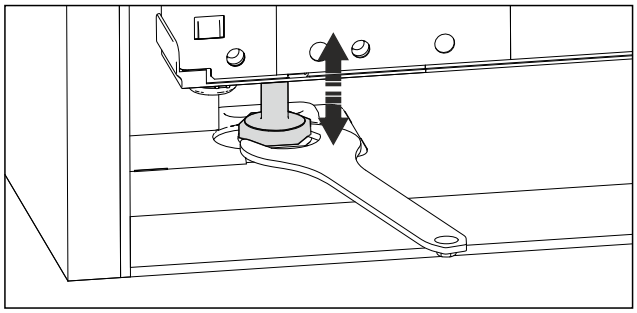

Fig. 40

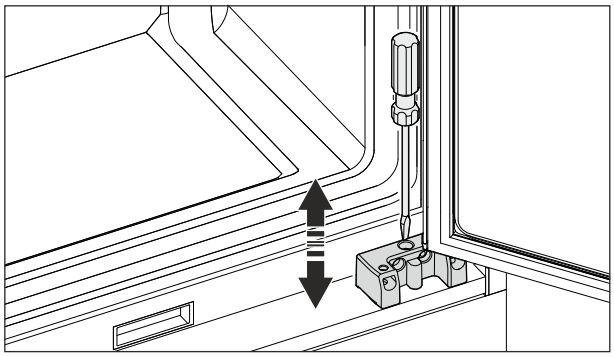

Fig. 41

The inclination of the appliance can be adjusted using the adjustable feet.
▶ Screw the adjustable foot out:
▷ The appliance tilts backwards.
▶ Screw the adjustable foot in:
▷ The appliance tilts forwards.

3.9.7 Securing the appliance

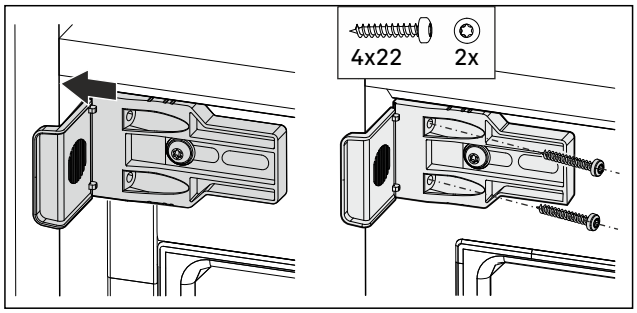

Fig. 42

▶ Press the mounting bracket onto the side wall of the niche.
▶ Firmly tighten the screws.

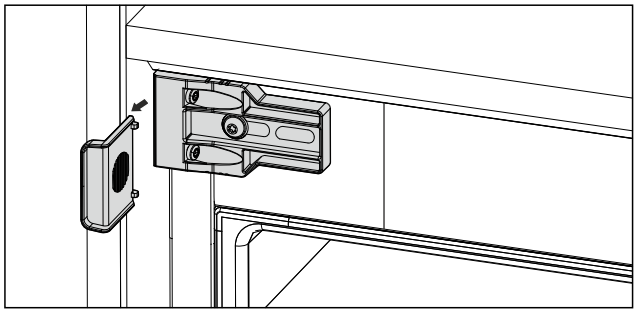

Fig. 43

▶ Separate the stop from the bracket.
▶ Dispose of the stop.

Fasten the appliance on the hinge side via the centre swap bearing block in the recess:*

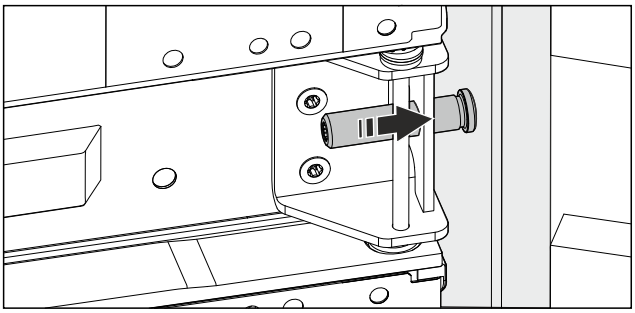

*Fig. 44 **

NOTICE
Damage to the cabinet side panel.*
▶ When you install the appliance in the niche: Do not turn the adjusting screw too far.

▶ Unscrew the adjusting screw in the centre swap bearing block in the direction of the cabinet side panel.*
▷ Appliance sits firmly in the niche.*
▷ Cabinet side panel is not damaged.*

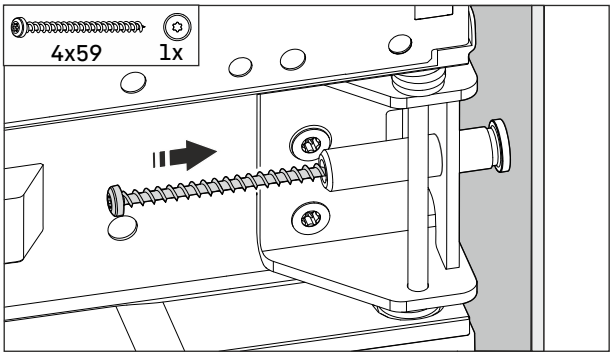

*Fig. 45 **
▶ Screw the screw from the accessory pack into the adjusting screw.*
▶ Screw the appliance to the cabinet side panel.*

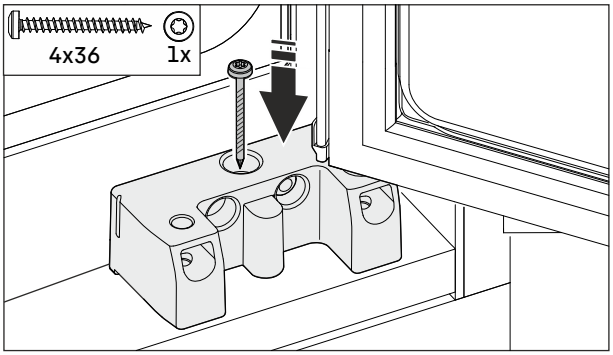

Fig. 46
▶ Screw the screw from the accessory pack into the upper centre opening of the swap bearing bracket.
▶ Screw the appliance into the niche via the lower swap bearing block.

3.9.8 Insert the levelling rails

You must installed levelling rails under the appliance from a niche height of 1400 mm. The levelling rails **reduce the noise level**. Two levelling rails and an installation handle are enclosed from a niche height of 1400 mm.

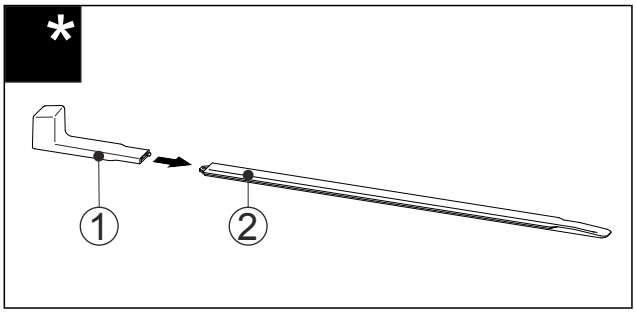

Fig. 47
▶ Attach the installation handle *Fig. 47 (1)* to the levelling rail *Fig. 47 (2)*.

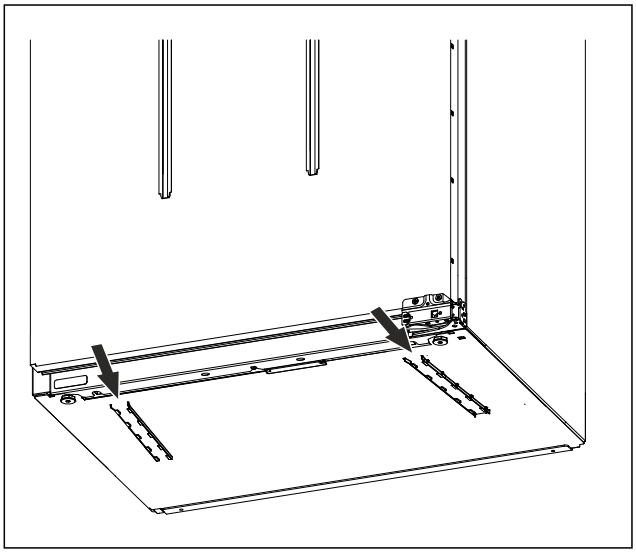

Fig. 48

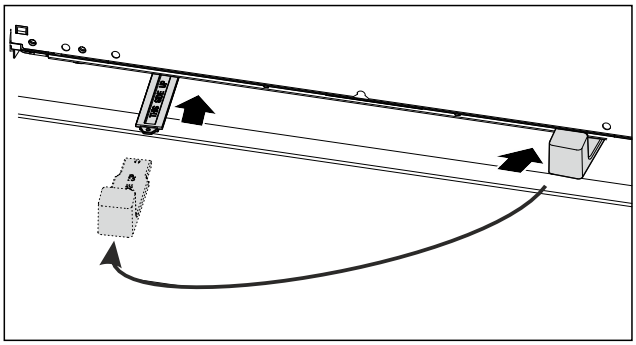

Fig. 49
▶ Push the levelling rail into the guide under the appliance base until it reaches the stop.
▶ Remove the installation handle and attach it to the second levelling rail.
▶ Push the second levelling rail into the guide under the appliance base until it reaches the stop.
▶ Remove the installation handle.
▷ The appliance is now levelled.

3.9.9 Fitting the unit fronts

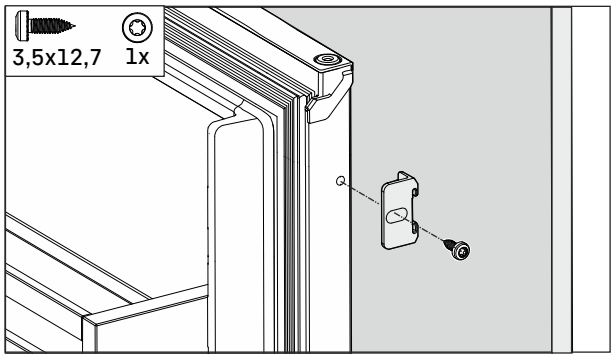

Fig. 50

▶ Open door to maximum.
▶ Mount the bracket on the appliance door.

Fasten the cabinet front:

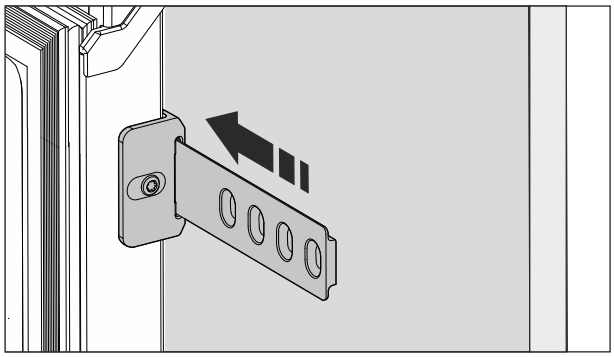

Fig. 51

▶ Slide the rail into the mounting bracket.
▷ Distance between the end of the rail and the outer edge of the unit door: Thickness of the cabinet side panel + 3 mm.

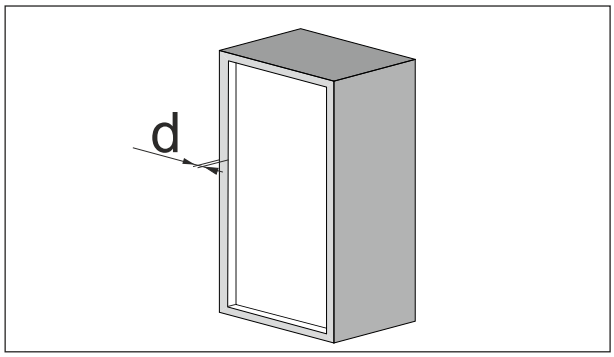

Fig. 52

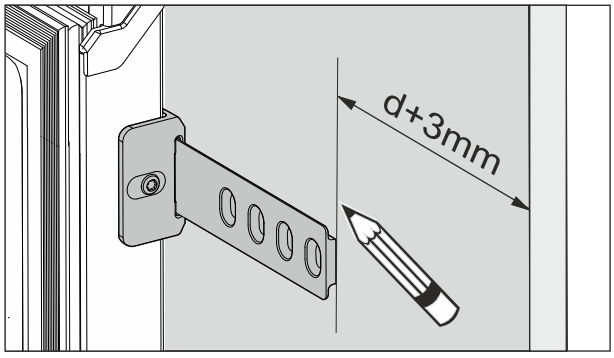

Fig. 52

▶ Mark the distance with a wash-off pen.

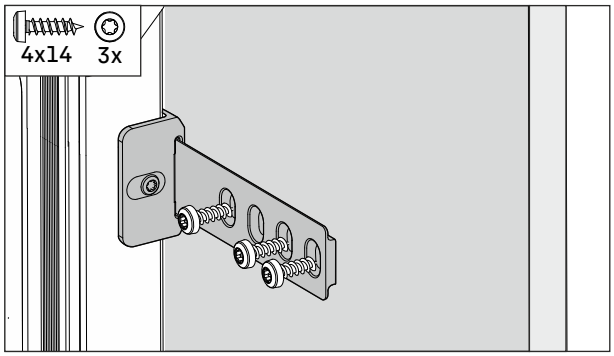

Fig. 53

▶ Slide the rail up to the marking.
▶ Screw the rail to the unit door.
▶ Close the door.

3.9.10 Check the installation

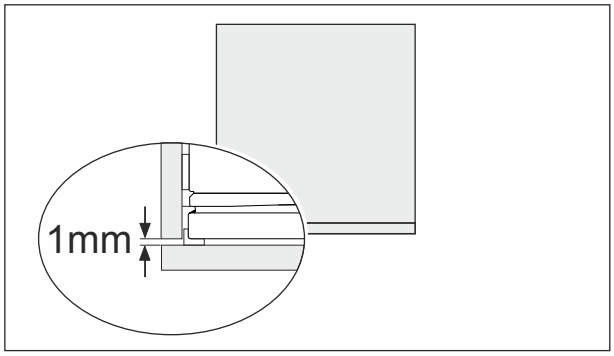

Fig. 54

▶ Check the distance between the unit door and the cabinet carcass.
▶ Check all screws.
▶ If necessary: Screw the screws tight.
▷ The door closes properly.
▷ The unit door does not fit snugly against the cabinet carcass.
▷ Distance between unit door and cabinet carcass all round at least 1 mm.

3.9.11 Attaching the covers

▶ Open the door.

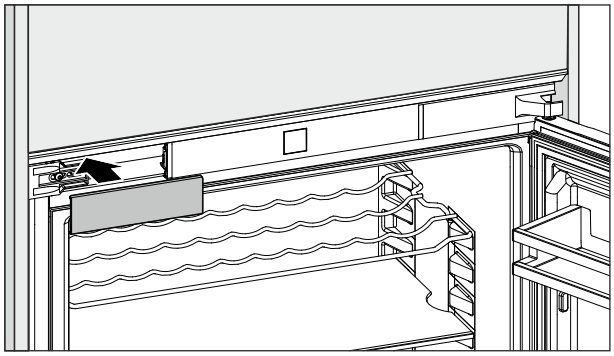

Fig. 55

▶ Attach the cover at the top left.

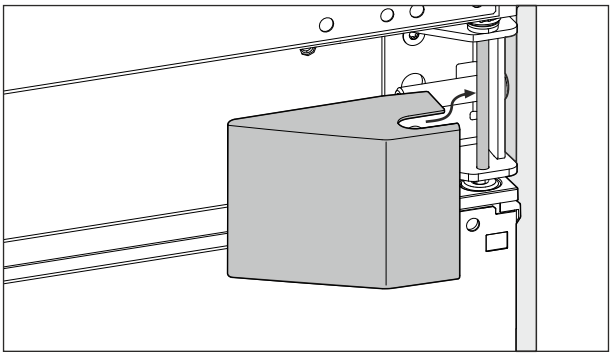

*Fig. 56 **

▶ Place the cover on the centre hinge.*

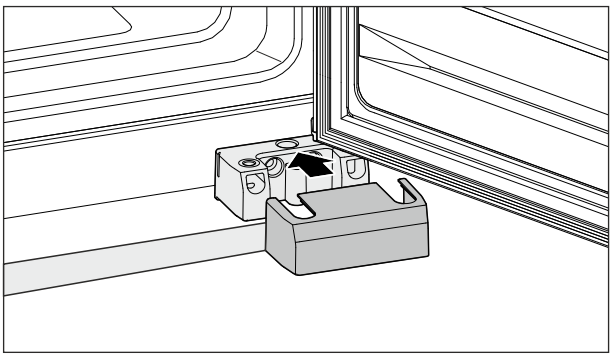

Fig. 57

▶ Place the cover on the lower hinge.

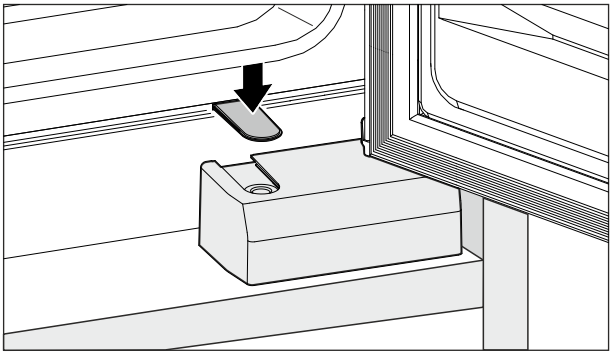

Fig. 58

▶ Place the cover on the lower swap bearing block.

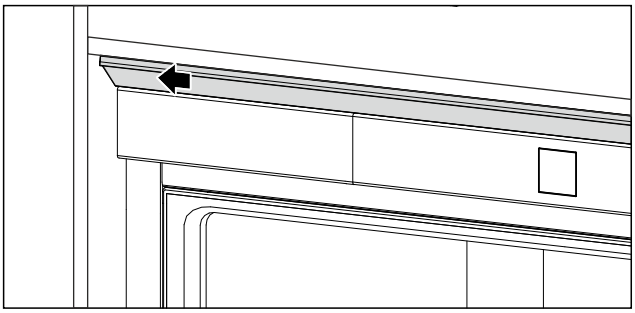

Fig. 59

▶ Move the trim panel towards the handle side.

▷ The trim panel fits snugly against the side panel of the cabinet.

Attach the magnetic piping:

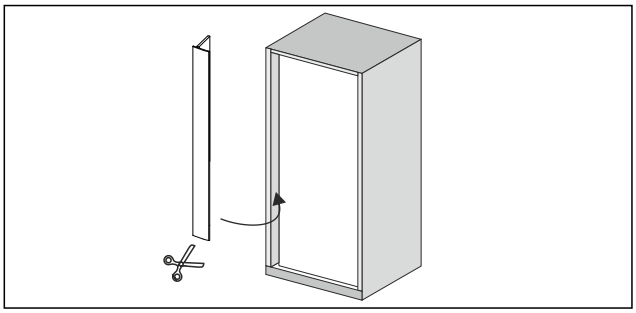

Fig. 60

▶ If necessary: Cut the piping to the required length with sharp scissors.

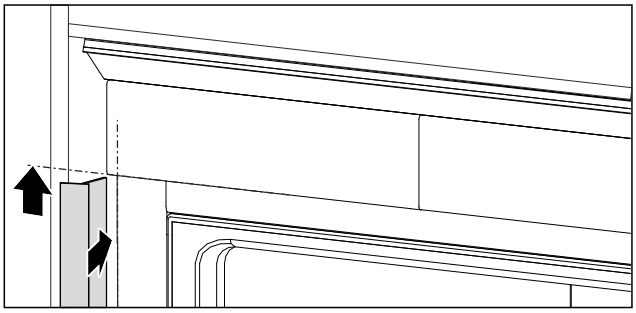

Fig. 61

▶ Place the piping below the top left cover and press down.

3.10 After installation

▶ Remove all transport safety fittings from the interior.

NOTICE

Damage to property caused by pointed or sharp objects!
Using pointed or sharp objects when removing packaging material may damage the appliance.

▶ Do not use any pointed or sharp objects to remove the packaging material.

▶ Remove protective films from the interior: Peel the film off flat along the surface of the component to minimise its adhesive force.

▶ Clean the appliance. (see 10.6 Cleaning the appliance)

▶ Note down the type (model, number), appliance name, appliance/serial number, date of purchase and retailer's address.

3.11 Connecting the appliance to the power supply

WARNING

Danger of electric shock and injury due to damaged appliance or damaged mains cable!
Danger of cuts and fatal injuries. If the appliance or the mains cable is damaged during transport, you may be electrocuted. You could also cut yourself on damaged parts of the appliance housing.

▶ Check the appliance and the mains cable for damage after transport.

▶ Never put the appliance into operation if the appliance or the mains cable are damaged.

▶ Contact Customer Service.

You can connect your appliance to the mains using the power cable supplied separately. The mains power cable has an appliance coupler at one end and a mains plug at the other end.

Make sure that the following requirements are fulfilled:

- The appliance and power cable are undamaged.
- The appliance is installed in accordance with the regulations. (see 3.9 Installation in the niche)
- Requirements for the electrical connection are met.
- Dimensions for connection in accordance with regulations are known and observed.
- Mains voltage and frequency correspond to the specifications on the type plate.
- The socket is earthed according to the regulations and fused.
- The fuse tripping current is between 10 A and 16 A.
- The socket is easily accessible and is not behind the appliance. (see 3.3 Recess dimensions)

NOTICE
Danger of damage to incorrect operation!
Damage to the electrical components of the appliance.
▶ Only use the supplied mains cable.

WARNING
Danger of fire due to incorrect connection!
Burns.
Damage to the appliance.
▶ Do not use an extension cable.
▶ Do not use distributor blocks.

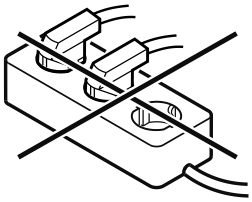

NOTICE
Danger of damage to incorrect connection!
Damage to the appliance.
▶ Do not connect the appliance to a stand-alone inverter, e.g. solar power systems and petrol generators.

▶ Connect the mains cable plug to the power supply. Ensure that the plug is tightly in the socket.
▷ The Liebherr logo appears in the display.
▷ The display switches to the standby symbol.
▷ If no action occurs within 60 seconds: The standby symbol fades or disappears.
▷ The appliance is connected. For information regarding first use, see the following section or the operating instructions.

3.12 Disposing of packaging

WARNING
Danger of suffocation due to packing material and plastic film!
▶ Do not allow children to play with packing material.

The packaging is made of recyclable materials:
- corrugated board/cardboard
- expanded polystyrene parts
- polythene bags and sheets
- polypropylene straps
- nailed wooden frame with polyethylene panel*

▶ Take the packaging material to an official collecting point.

4 Functionality of the Touch display

You operate your appliance using the Touch display. You select appliance functions in the Touch display (hereafter referred to as display) by tapping them. If you do not perform any action on the display for 10 seconds, the display either jumps back to the higher-level menu or directly to the status display.

4.1 Navigation and symbol explanation

In the illustrations, different symbols are used to navigate the display. The following table describes these symbols.

Symbol	Description
	Press the Next navigation arrow: Navigates to the next option in the menu.
	Press the Back navigation arrow: Jumps back one option in the menu.
	Press the navigation arrow several times in succession: Navigates in the menu to the desired function.
	Press the Confirm symbol: Activates/deactivates function. Opens submenu.
Back	**Press the Confirm symbol together with the back icon:** Jumps back one menu level.
	Arrow with clock: It takes more than 10 seconds for the following message to appear in the display.
2s 5s 10s	**Arrow with a time indication:** It takes the specified amount of time until the following message appears in the display.
	"Open Settings menu" symbol: Navigates to the Settings menu and opens the settings menu. If necessary: Navigate to the desired function in the Settings menu. (see 4.2.1 Opening the Settings menu)

* Depending on model and options

Symbol	Description
	“Open Advanced menu” symbol: Navigates to the Advanced menu and opens the advanced menu. If necessary: Navigate to the desired function in the Advanced menu. (see 4.2.2 Opening the Advanced menu)
No action for 10 seconds	If you do not perform any action on the display for 10 seconds, the display either jumps back to the higher-level menu or directly to the status display.
Close the door and open it again.	If you close the door and immediately open it again, the display jumps directly back to the status display.

Note: Illustrations of the display are shown in the English version.

4.2 Menus

The appliance functions can be found in various menus.

Menu	Description
Main menu	When you switch the appliance on, you are automatically in the main menu. From here you can navigate to the most important appliance functions, to the Settings menu and to the Advanced menu.
Settings Settings menu	The Settings menu contains additional appliance functions for setting up your appliance. (see 4.2.1 Opening the Settings menu)
Advanced menu	The advanced menu contains special appliance functions for setting up your appliance. Access to the Advanced menu is protected by the numerical code **1 5 1**. (see 4.2.2 Opening the Advanced menu)

4.2.1 Opening the Settings menu

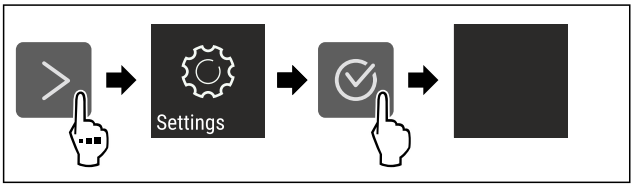

Fig. 62 Example illustration

▶ Carry out action steps according to the illustration.
▷ Settings menu is open.
▶ If necessary: Navigate to the desired function.

4.2.2 Opening the Advanced menu

Fig. 63

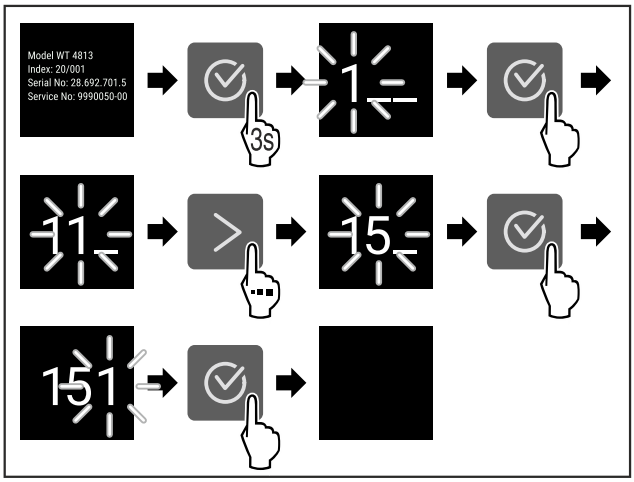

*Fig. 64 Example illustration, access with numerical code **151***

▶ Carry out action steps according to the illustration.
▷ The expanded menu is open.
▶ If necessary: Navigate to the desired function.

4.3 Sleep mode

If you do not touch the display for 1 minute, the display switches to sleep mode. In sleep mode, the display brightness is dimmed.

4.3.1 Ending sleep mode

▶ Press any navigation key.
▷ Sleep mode is ended.

5 Putting into operation

5.1 Switching on appliance (first use)

Make sure that the following requirements are fulfilled:

- ❑ The appliance is properly installed and connected according to the installation instructions.
- ❑ All adhesive strips, adhesive and protective films and transport locks are removed from inside and on the appliance.
- ❑ All marketing leaflets are removed from the drawers.
- ❑ You are familiar with the functionality of the Touch display. (see 4 Functionality of the Touch display)

Switch on the appliance using the Touch display:

▶ If the display is in sleep mode: Press the confirmation symbol.
▶ Carry out action steps according to the illustration.

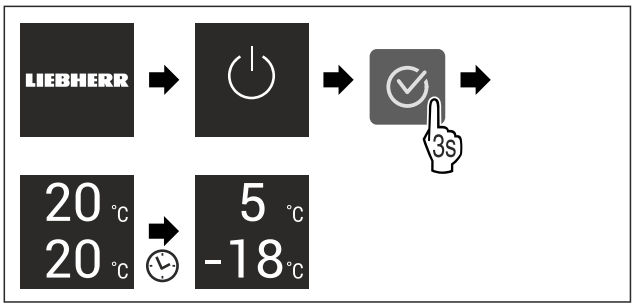

Fig. 65 Example illustration

▷ Status display appears.
▷ The appliance cools to the temperature set at the factory.

▷ The appliance starts in demo mode (status display with DEMO appears): If the appliance starts in demo mode, you can deactivate demo mode within the next 5 minutes. (see Demo mode)

More information:

- Start the SmartDevice for the first time. (see 2.3 SmartDevice) and (see WiFi)

Note
The manufacturer recommends:
▶ Stock with food: Wait for around 6 hours until the set temperature is reached.
▶ **Store frozen foods** at -18 °C or colder.
▶ Observe the notes on storing food. (see 6.1 Information regarding storage)

Note
Accessories can be purchased from the Liebherr-Hausgeräte store at go.liebherr.com/47wtc4.

6 Storage

6.1 Information regarding storage

WARNING
Fire hazard from electrical appliances!
If you use electrical appliances in the food area of your appliance, they can cause a fire.
▶ Do not use electrical appliances in the food area of the appliance unless recommended by the manufacturer.

Note
The energy consumption increases and the cooling power goes down if ventilation is not sufficient.
▶ Always keep air slots clear.

Observe the following specifications for storage:

- Keep the air vents on the fan free.*
- In the freezer compartment: Package food properly.
- Package or cover foods that readily take on or give off odours or taste in closed containers.
- Keep liquids in closed containers.
- Leave space between goods to ensure good air circulation.
- Store food according to the instructions on the packaging.
- Always observe the best-before date indicated on the packaging.

Note
Failure to follow these guidelines can lead to foodstuffs spoiling.

6.2 Fridge compartment

The air circulation in the appliance creates different temperature zones. You will find the different temperature zones in the appliance and equipment overview. (see 2.2 Overview of appliances and equipment)

6.2.1 Arranging your food properly

CAUTION
Risk of injury and damage to the appliance due to incorrectly stored food or objects!
If you place food or objects on the bottom glass shelf, the door may not close properly. This could cause the door racks to break, food or objects to fall out and cause injury.
▶ Keep the front area of the bottom glass shelf clear.

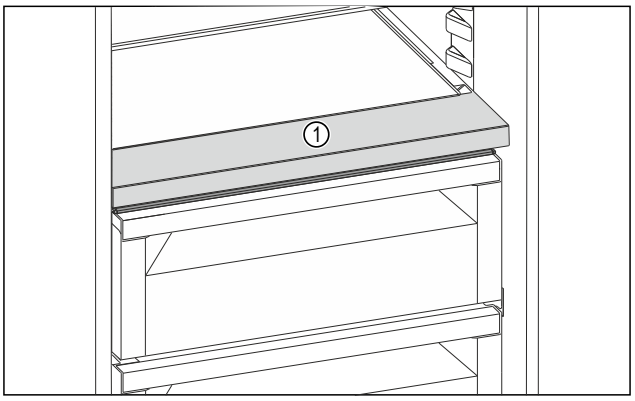

Fig. 66 Example illustration
(1) Front area
▶ Upper area and door: Store butter, cheese, tinned food and tubes.
▶ Coldest temperature zone: Store perishable foods such as pre-cooked meals, meat and lunch meats.
▶ Bottom shelf: Store raw meat or fish.

6.3 EasyFresh

EasyFresh is great for non-packaged foods, such as fruit and vegetables.

Note
▶ Store sliced citrus fruit (e.g. lemon or orange slices) in a container.

The humidity inside the drawer depends on the humidity content of the food inside it, and the frequency at which it is opened. The humidity can be regulated. (see 9.6 Compartment lid for EasyFresh Safe)

6.3.1 Arranging your food properly

▶ Store unpackaged fruit and vegetables.
If the humidity is too high:
▶ Regulate the humidity.

6.4 Freezer compartment

Here, a dry, frosty storage climate is created at -18 °C. A frosty storage climate is suitable for storing frozen food for several months, for making ice cubes or freezing fresh food.

6.4.1 Freezing food

Freezing quantity

The maximum amount of fresh food that you can freeze within 24 hours is specified on the type plate (see 11.5 Model plate) under “Freezing capacity ... kg/24h”.

To ensure that food quickly freezes through, adhere to the following quantities per package:

- Fruit and vegetables up to 1 kg
- Meat up to 2.5 kg

* Depending on model and options

Freezing food using SuperFrost

Depending on the quantity to be frozen, you can activate SuperFrost before freezing in order to achieve lower freezing temperatures. (see SuperFrost)

Appliance without NoFrost:*

▶ Activate SuperFrost if the amount of food you have to freeze is more than approx. 1 kg.*

Appliance with NoFrost:*

▶ Activate SuperFrost if the amount of food you have to freeze is more than approx. 2 kg.*

The time at which you activate SuperFrost depends on the amount of food you have to freeze:

Freezing quantity	Time at which you should activate SuperFrost
Small amount of food to freeze	Activate SuperFrost about 6 hours before freezing. As soon as the appliance automatically deactivates SuperFrost, you can rearrange the food.
Maximum amount of food to freeze	Activate SuperFrost about 24 hours before freezing. As soon as the appliance automatically deactivates SuperFrost, you can rearrange the food.

Arranging your food properly

CAUTION

Risk of injury due to broken glass!

Bottles and cans containing drinks may burst when being frozen. This applies particularly to sparkling drinks.

▶ Do not freeze bottles and cans containing drinks!

Freezing quantity	Arranging your food properly
Small amount of food to freeze	Distribute packaged groceries throughout all drawers. If possible, place groceries at the back of the drawer near the rear wall.
Maximum amount of food to freeze	Distribute packaged groceries throughout all drawers. If possible, place groceries at the back of the drawer near the rear wall.

6.4.2 Defrosting food

WARNING

Risk of food poisoning!

▶ Do not re-freeze thawed food.

▶ Use defrosted foodstuff as soon as possible.

You can defrost food in several ways:

- In the fridge compartment
- In the microwave
- In the oven/fan-assisted oven
- At room temperature

▶ Take out only as much food as necessary.

6.5 Storage times

Refer to the specified storage times as a guide.

In the case of foods with a minimum shelf life, the date indicated on the packaging still applies.

6.5.1 Fridge section

Always follow the best-before date stated on the packaging.

6.5.2 Freezer compartment

Recommended storage period for various types of food		
Ice cream	at -18 °C	2 to 6 months
Sausages, ham	at -18 °C	2 to 3 months
Bread, baked goods	at -18 °C	2 to 6 months
Game, pork	at -18 °C	6 to 9 months
Fatty fish	at -18 °C	2 to 6 months
Lean fish	at -18 °C	6 to 8 months
Cheese	at -18 °C	2 to 6 months
Poultry, beef	at -18 °C	6 to 12 months
Vegetables, fruit	at -18 °C	6 to 12 months

7 Saving energy

- Pay attention to good ventilation. Do not cover ventilation holes or grids.
- Always keep the fan air slits clear.
- Do not install the appliance in direct sunlight or near radiators or similar sources of heat.
- If the appliance is installed directly next to an oven, the energy consumption may increase slightly. This is dependent on the service life and usage intensity of the oven.
- Energy consumption depends on the installation conditions, e.g. the ambient temperature . A warmer ambient temperature can increase the energy consumption.
- Open the appliance for as short a time as possible.
- The lower the temperature is set the higher the energy consumption.
- Sort your food: home.liebherr.com/food.
- Keep all food properly packed and covered. This prevents frost from forming.
- Only take food out for as long as necessary so that it doesn't warm up too much.
- Inserting warm food: allow to cool down to room temperature first.
- Thaw frozen food in the refrigerator.
- If there is a thick layer of frost in the appliance: defrost the appliance.*
- For longer periods of absence, use HolidayMode (see HolidayMode) .

8 Controls

8.1 Controls and displays

8.1.1 Status display

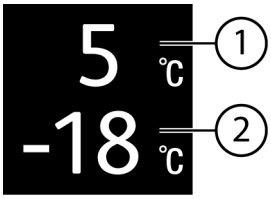

Fig. 67

(1) Temperature display of the fridge section

(2) Freezer compartment temperature display

The Status display shows the set temperature and is the home display. From there, you can navigate to the options and settings.

8.1.2 Display symbols

Display symbols provide information on the current appliance status:

Symbol	Appliance status
	Standby The appliance or temperature zone is switched off.
	Flashing number Appliance is working. Temperature flashes until the set value is reached.
	Flashing symbol Appliance is working. Setting is made.
	Bar grows steadily Function is activated.

8.2 Appliance functions

8.2.1 Notes on the appliance functions

The appliance functions are set at the factory so that your appliance is fully functional.

Before you alter, activate or deactivate the device functions, make sure that the following requirements are met:

❑ You have read and understood the descriptions of how the display works. (see 4 Functionality of the Touch display)
❑ You have familiarised yourself with the operating and display elements of your appliance.

Switching the appliance off and on

Use this function to switch the entire appliance off and on.

Switching off the appliance

When you switch the appliance off, then the previously saved settings are saved.

Make sure that the following requirements are fulfilled:

❑ Handling instructions (see 12 Shutting down) are carried out.

Fig. 68

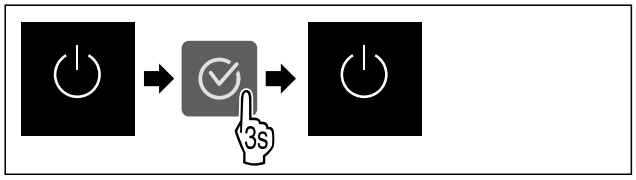

Fig. 69

▶ Carry out action steps according to the illustration.
▷ Appliance is switched off.
▷ The standby symbol appears in the display.
▷ Display turns black.

Switching on the appliance

If the display is in sleep mode:

▶ Press any navigation key.

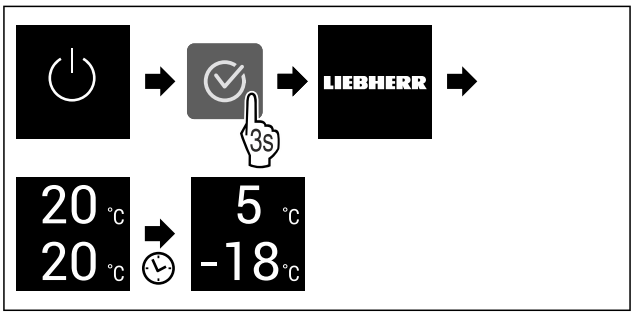

Fig. 70 Example illustration

▶ Carry out action steps according to the illustration.
When the appliance starts in demo mode:
▶ Deactivating demo mode. (see Deactivating demo mode)
▷ The appliance is switched on.
▷ Previous settings are restored.
▷ The appliance cools to the target temperature set.

Switching temperature zone off and on

You can switch temperature zones of the appliance off independently.

Application:

- Cleaning
- Defrosting

Switching the fridge compartment off

Make sure that the following requirements are fulfilled:

❑ Refrigerator compartment has been emptied.

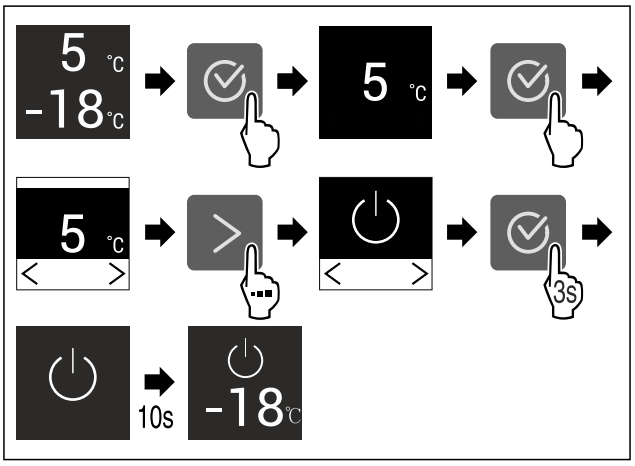

Fig. 71 Example illustration

▶ Carry out action steps according to the illustration.
▷ Refrigerator compartment is switched off.

Switching the fridge compartment on

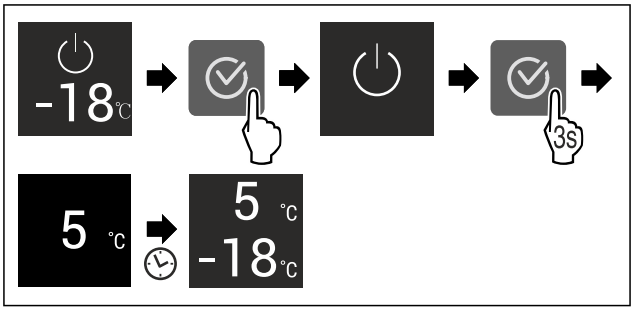

Fig. 72 Example illustration

▶ Carry out action steps according to the illustration.
▷ Refrigerator compartment is switched on.
▷ The appliance cools to the last set temperature.

Temperature

Use this function to set the temperature.

The temperature depends on the following factors:

- Frequency of door opening
- Duration of door opening
- Room temperature of the installation site
- Type, temperature and quantity of food

Temperature zone	Factory-set temperature	Recommended setting
5 °C Fridge section	5 °C	4 °C
-18 °C Freezer section	-18 °C	-18 °C

Setting the temperature in the fridge section

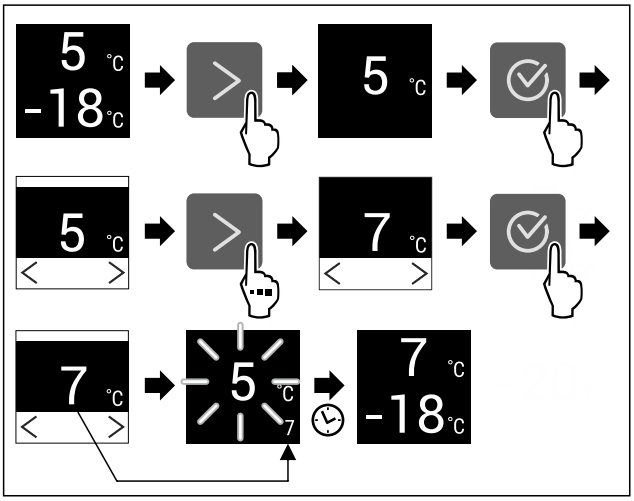

Fig. 73 Example illustration

▶ Carry out action steps according to the illustration.
▷ Temperature is set.

Setting the temperature in the freezer section

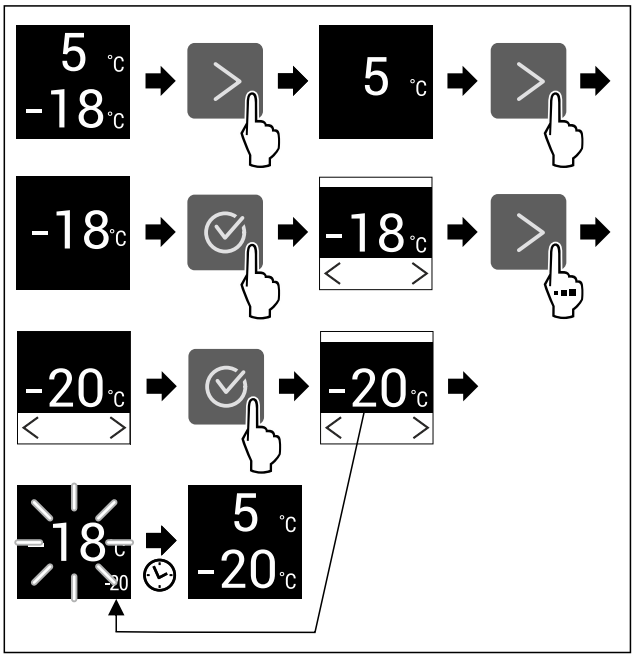

Fig. 74 Example illustration

▶ Carry out action steps according to the illustration.
▷ Temperature is set.

SuperCool

You can use this function to activate or deactivate SuperCool. If SuperCool is activated, then the appliance increases the cooling capacity. It allows you to achieve lower cooling temperatures. You can activate SuperCool when you would like to cool a large quantity of food quickly.

If the function is active, the appliance operates at higher power. As a result, the appliance's operating noise may be temporarily louder and energy consumption will increase.

Activating SuperCool

Time for activation of the function:

- When you would like to store fresh food in the fridge section: Activate the function when inserting food.

Fig. 75

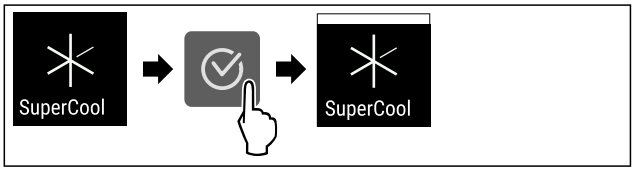

Fig. 76

▶ Carry out action steps according to the illustration.
▷ SuperCool is activated.

Deactivating SuperCool

SuperCool is deactivated automatically after 18 hours. However, you can also deactivate SuperCool manually at any time:

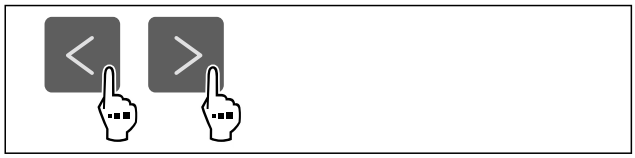

Fig. 77

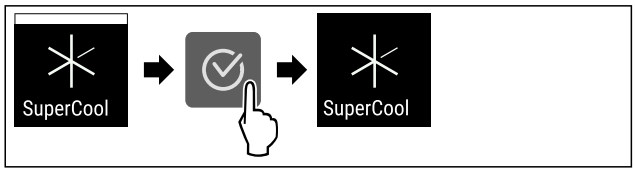

Fig. 78

▶ Carry out action steps according to the illustration.
▷ SuperCool is deactivated.
▷ The appliance continues to run in normal mode.
▷ The appliance cools to the temperature set previously.

PowerCool

You can use this function to activate or deactivate PowerCool. PowerCool ensures optimised temperature layers for cooling your food.

The function applies to the fridge section.

Application:

- At higher room temperatures (as of approx. 35 °C)
- At high humidity, e.g. on summer days
- When storing moist food, in order to prevent condensate forming in the interior

Note
The fan may also run even if the function is deactivated. It therefore ensures even temperature distribution in the appliance.

If the function is active, the device operates at higher power. As a result, the device's operating noise may be temporarily louder and energy consumption will increase.

Activating PowerCool

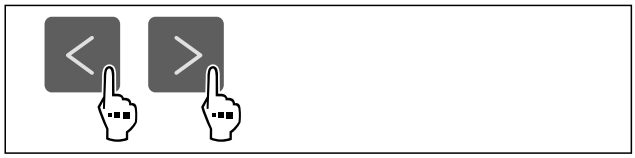

Fig. 79

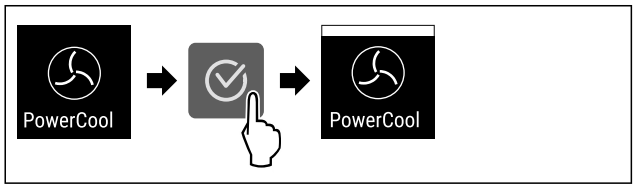

Fig. 80

▶ Carry out action steps according to the illustration.
▷ PowerCool is activated.

Deactivating PowerCool

Fig. 81

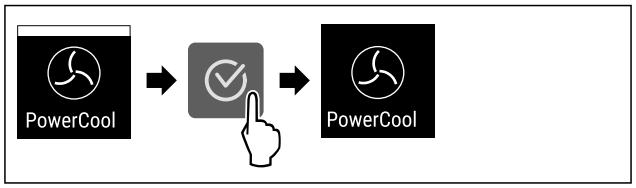

Fig. 82

▶ Carry out action steps according to the illustration.
▷ PowerCool is deactivated.

SuperFrost

You can use this function to activate or deactivate SuperFrost. If SuperFrost is activated, then the appliance increases the freezing capacity. It allows you to achieve lower freezing temperatures.

Application:

- Quickly freeze fresh food through to the core. This ensures that the nutrition, appearance and taste of frozen food is maintained.
- Increase the cold reserve in stored frozen food before defrosting the appliance.

If the function is active, the appliance operates at higher power. As a result, the appliance's operating noise may be temporarily louder and energy consumption will increase.

If the door is open for too long, e.g. because you are putting food in, the appliance automatically checks whether the actual temperature in the appliance matches the set temperature. If the difference exceeds a certain value, the appliance automatically cools more vigorously. As a result, the temperature shown on the display may be higher than the actual temperature in the appliance. This is normal and your appliance is working correctly.*

Activating SuperFrost

Make sure that the following requirements are fulfilled:

❑ Freezing quantity and time for activation of SuperFrost are taken into account. (see Freezing food using SuperFrost)

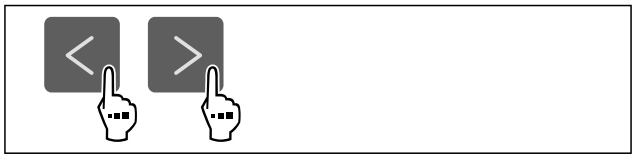

Fig. 83

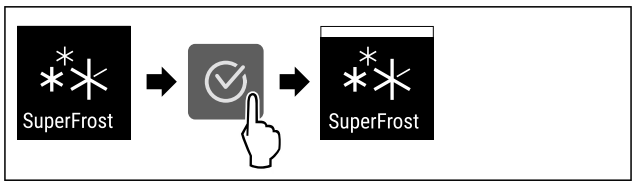

Fig. 84

▶ Carry out action steps according to the illustration.
▷ SuperFrost is activated.

Deactivating SuperFrost

SuperFrost is automatically deactivated after 56 to 72 hours depending on the quantity of the food inserted. However, you can also deactivate SuperFrost manually at any time:

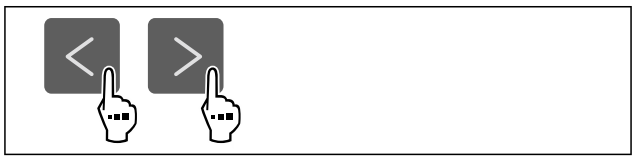

*** Depending on model and options**

Fig. 85

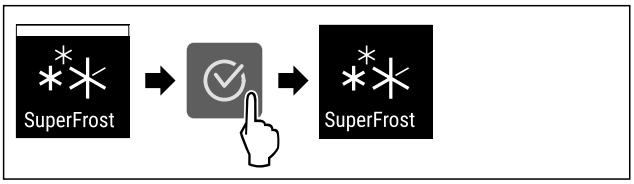

Fig. 86

▶ Carry out action steps according to the illustration.
▷ SuperFrost is deactivated.
▷ The appliance continues to run in normal mode.
▷ The appliance cools to the temperature set previously.

PartyMode

You can use this function to activate or deactivate PartyMode. PartyMode activates various functions that are useful for a party.

PartyMode activates the following functions:

- SuperCool (see SuperCool)
- SuperFrost (see SuperFrost)

You can adjust all listed functions individually and flexibly. When you deactivate PartyMode, all changes are discarded.

If the function is active, the device operates at higher power. As a result, the device's operating noise may be temporarily louder and energy consumption will increase.

Activating PartyMode

Fig. 87

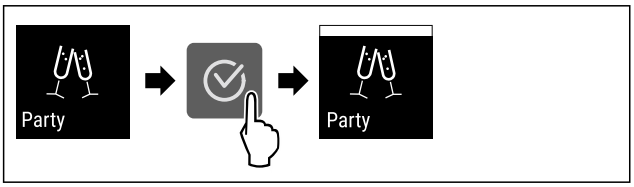

Fig. 88

▶ Carry out action steps according to the illustration.
▷ PartyMode and the associated functions are activated.
▷ The current temperature flashes until the target temperature is reached.

Deactivating PartyMode

The PartyMode is automatically deactivated after 24 seconds. However, you can also deactivate PartyMode manually at any time:

Fig. 89

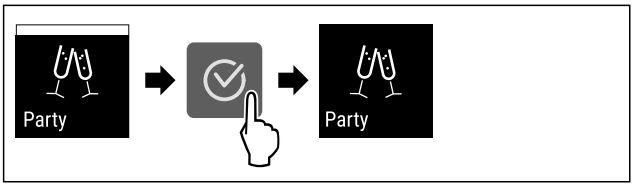

Fig. 90

▶ Carry out action steps according to the illustration.
▷ PartyMode is deactivated.
▷ The appliance cools to the temperature set previously: The current temperature flashes until the target temperature is reached.

HolidayMode

You can use this function to activate or deactivate HolidayMode. If you activate HolidayMode, the fridge section is set to 15 °C. This saves you energy during longer periods of absence and prevents bad odours and growth of mould.

Appliance status when HolidayMode is active
Fridge section cools to 15 °C.
EasyFresh cools to 15 °C.
The set temperature is maintained in the freezer section.
PartyMode is deactivated.
SuperCool is deactivated.
PowerCool is deactivated.

Activating HolidayMode

▶ Empty the fridge section completely.
▶ Empty EasyFresh completely.

Fig. 91

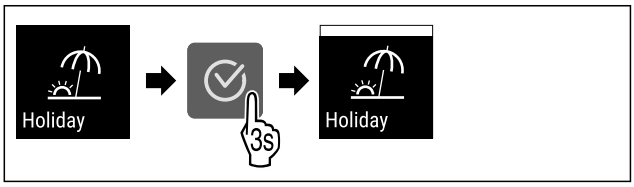

Fig. 92

▶ Carry out action steps according to the illustration.
▷ HolidayMode is activated.
▷ Temperature display shows HolidayMode symbol.

Deactivating HolidayMode

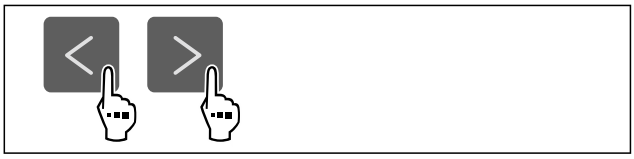

Fig. 93

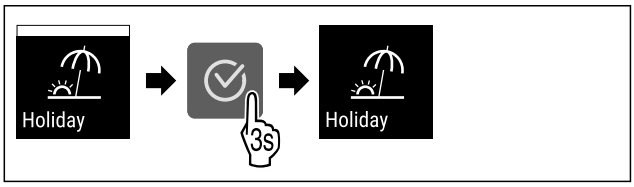

Fig. 94

▶ Carry out action steps according to the illustration.
▷ HolidayMode is deactivated.
▷ The appliance cools to the temperature set previously.

SabbathMode

You can use this function to activate or deactivate SabbathMode. If you activate this function, some electronic functions are switched off. As a result, your device meets the religious requirements for Jewish holidays such as Sabbath and complies with STAR-K Kosher certification.

Device status when SabbathMode is active
The status display shows SabbathMode permanently.
All functions on the display are locked except for the **Deactivate SabbathMode function**.
Active functions remain active.
The display remains bright when you close the door.
The interior lighting is deactivated.
Reminders are not implemented. The set time interval stops.
Reminders and warnings are not displayed.
There is no door alarm.
There is no temperature alarm.
The defrosting cycle operates only for the specified time, without considering the appliance consumption.
After a power failure, the appliance returns to SabbathMode.

Device status

Note
This appliance has certification from the "Institute for Science and Halacha". (www.machonhalacha.co.il)

You can find a list of STAR-K-certified appliances at www.star-k.org/appliances.

Activating SabbathMode

WARNING
Danger of food poisoning from spoiled food!
If you have SabbathMode activated and a power failure occurs, no message appears in the status display about the power failure. Once the power is restored, the appliance continues to operate in SabbathMode. The power failure may mean that food spoils and the consumption of this food could lead to food poisoning.
After a power failure:
▶ Do not consume food that was frozen and has thawed out.

Fig. 95

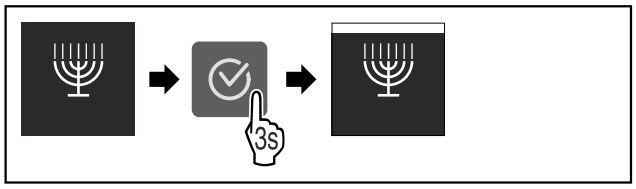

Fig. 96
▶ Carry out action steps according to the illustration.
▷ SabbathMode is activated.
▷ The status display shows SabbathMode permanently.

Deactivating SabbathMode

The SabbathMode is automatically deactivated after 80 hours. However, you can also deactivate SabbathMode manually at any time:

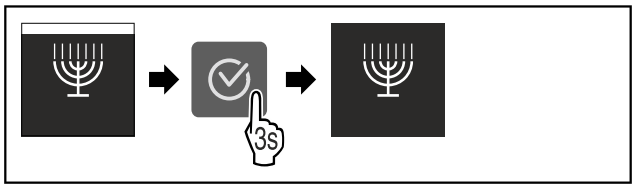

Fig. 97
▶ Carry out action steps according to the illustration.
▷ SabbathMode is deactivated.

E-Saver

You can use this function to activate or deactivate Energy saving mode. If energy saving mode is activated, the energy consumption decreases and the temperature in the device increases. The food remains fresh, but the shelf life is shortened.

Temperature zone	Recommended setting (see Setting the temperature in the fridge section)	Temperature with active E-Saver
5 °C Fridge section	4 °C	7 °C
-18 °C Freezer section	-18 °C	-16 °C

Temperatures

Activating E-Saver

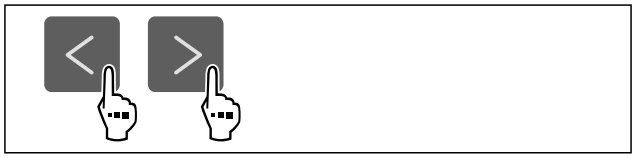

Fig. 98

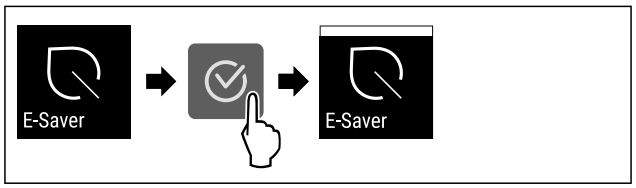

Fig. 99
▶ Carry out action steps according to the illustration.
▷ Energy saving mode is activated.

Deactivating E-Saver

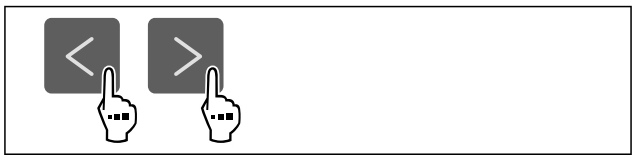

Fig. 100

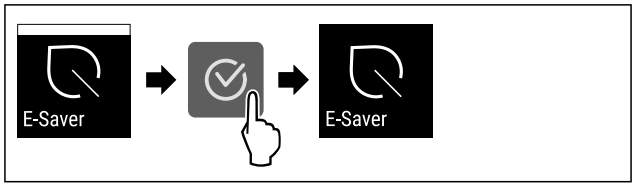

Fig. 101

▶ Carry out action steps according to the illustration.
▷ Energy saving mode is deactivated.

CleaningMode*

You can use this function to activate or deactivate CleaningMode. CleaningMode enables the appliance to be cleaned conveniently.

This setting applies to the fridge section.

Application:

- Clean the fridge section. (see 10.6 Cleaning the appliance)

Device status when CleaningMode is active
The status display shows CleaningMode permanently.
The fridge section is switched off.
Interior lighting is activated.
The reminders and warnings are not displayed. No signal tone sounds.

Device status

Activating CleaningMode

Fig. 102

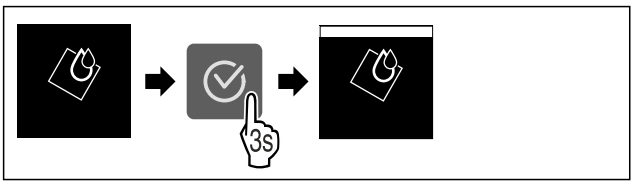

Fig. 103

▶ Carry out action steps according to the illustration.
▷ CleaningMode is activated.
▷ The status display shows CleaningMode permanently.

Deactivating CleaningMode

CleaningMode is deactivated automatically after 60 minutes. However, you can also deactivate CleaningMode manually at any time:

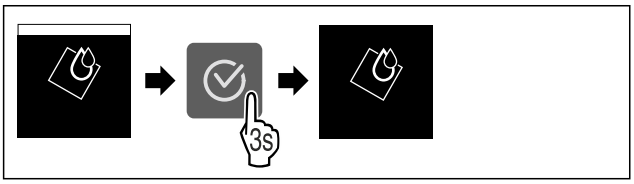

Fig. 104

▶ Carry out action steps according to the illustration.
▷ CleaningMode is deactivated.
▷ The appliance cools to the temperature set previously.

Input lock

You can use this function to activate or deactivate the input lock. The input lock prevents the appliance being operated accidentally, e.g. by children.

Application:

- Avoid unintentional modification of functions.
- Avoid unintentional switching off of the device.
- Avoid unintentional temperature setting.

Activating the input lock

If you activate the input lock, you can continue to navigate in the menus but you cannot select or change other functions.

Fig. 105

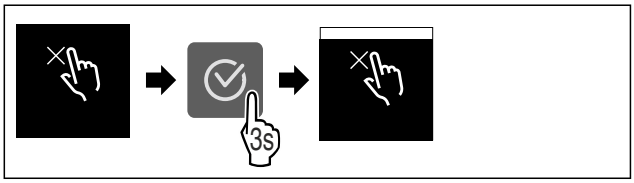

Fig. 106

▶ Carry out action steps according to the illustration.
▷ Input lock is activated.

Deactivating the input lock

Fig. 107

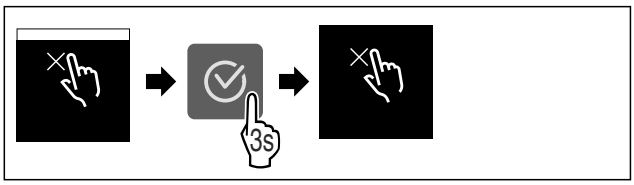

Fig. 108

▶ Carry out action steps according to the illustration.
▷ Input lock is deactivated.

Reminder

Use this function to activate or deactivate the reminders. The function is activated on delivery.

If the function is activated, the following reminders will appear:

- Replace the FreshAir activated carbon filter (see Replace the FreshAir activated carbon filter)

Activating the reminder

Fig. 109

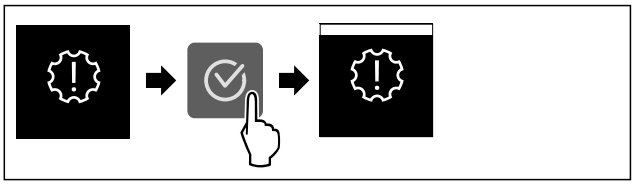

Fig. 110

▶ Carry out action steps according to the illustration.
▷ Reminder is activated.

Deactivating the reminder

Fig. 111

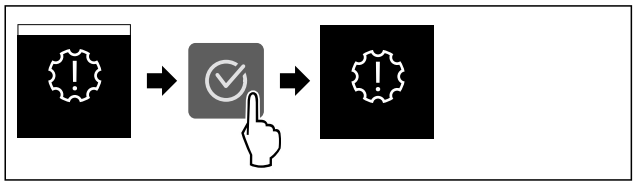

Fig. 112

▶ Carry out action steps according to the illustration.
▷ Reminder is deactivated.

Temperature unit

Use this function to set the temperature unit. You can set degrees Celsius or degrees Fahrenheit as the temperature unit.

Setting the temperature unit

Fig. 113

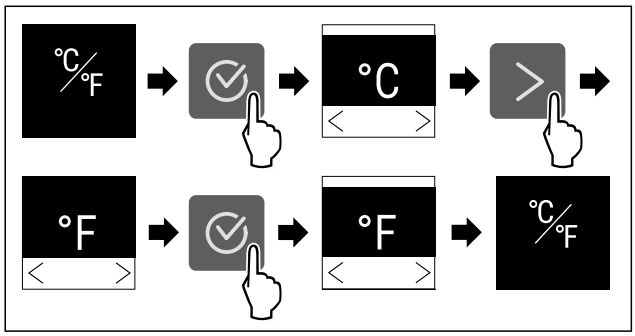

Fig. 114 Example illustration: Switch from degrees Celsius to degrees Fahrenheit.

▶ Carry out action steps according to the illustration.
▷ The temperature unit is set.

Display brightness

Use this function to set the display brightness in stages.

You can select the following brightness levels:

- 40 %
- 60 %
- 80 %
- 100 % (pre-setting)

Setting the brightness

Fig. 115

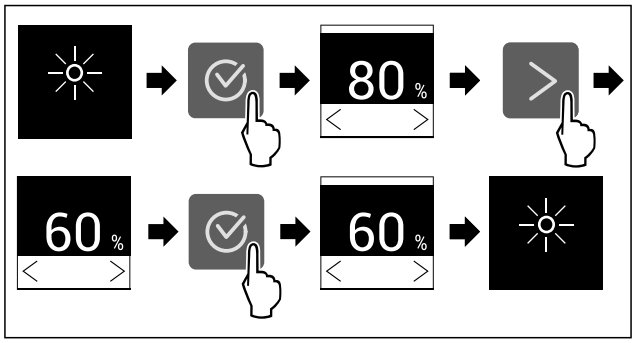

Fig. 116 Example illustration: Switch from 80 % to 60 %.

▶ Carry out action steps according to the illustration.
▷ The brightness is set.

WiFi

Use this function to connect your appliance to WiFi. You can then operate it via the SmartDevice app on a mobile device. You can also use this function to disconnect or reset the WiFi connection.

To connect your device to WiFi, you need the SmartDeviceBox.

More information on the SmartDevice: (see 2.3 SmartDevice)

Note
The SmartDevice function is not available in the following countries: Russia, Belarus, Kazakhstan.

You cannot use the SmartDeviceBox.

Establishing the WiFi connection for the first time

Make sure that the following requirements are fulfilled:

- ❑ You have purchased and inserted a SmartDeviceBox. (see 2.3 SmartDevice)
- ❑ You have installed the SmartDevice app (see apps.home.liebherr.com).
- ❑ Registration in the SmartDevice app is completed.

Fig. 117

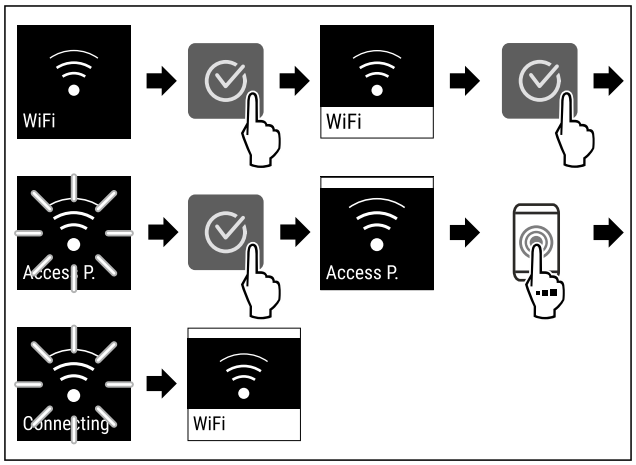

Fig. 118

▶ Carry out action steps according to the illustration.
▷ Connection is established.

Disconnecting from the WiFi

Fig. 119

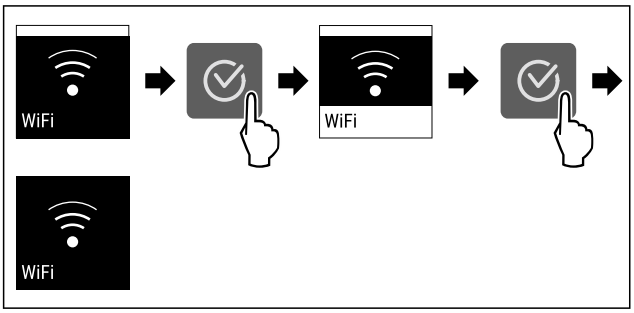

Fig. 120

▶ Carry out action steps according to the illustration.
▷ There is no connection.

Resetting the WiFi connection

Fig. 121

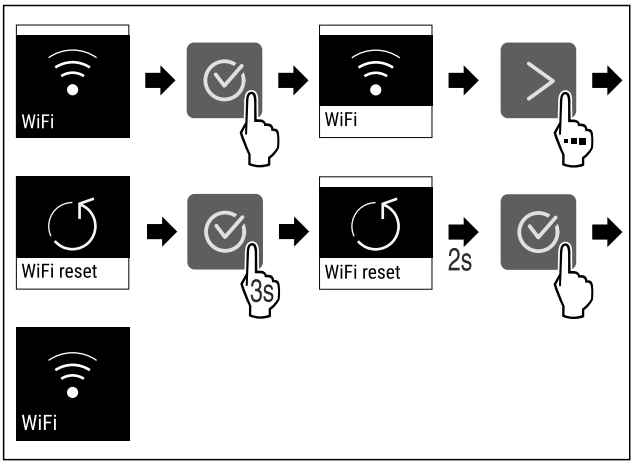

Fig. 122

▶ Carry out action steps according to the illustration.
▷ WiFi connection and other WiFi settings are reset to factory settings.

Showing information about the WiFi connection

Fig. 123

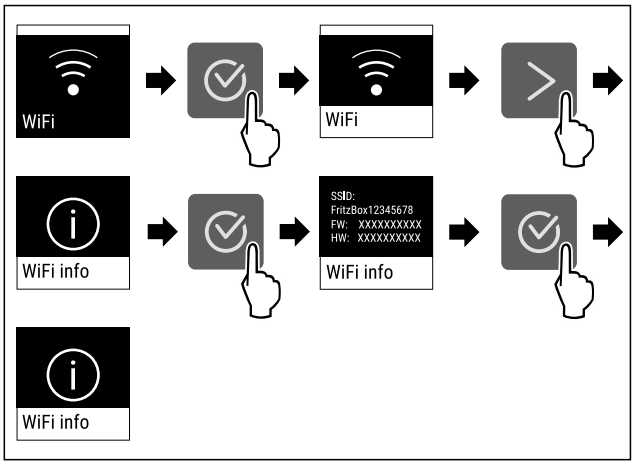

Fig. 124

▶ Carry out action steps according to the illustration.

Device information

Use this function to indicate the model name, index, serial number and service number of your device. You will need the device information when you contact customer service. (see 11.4 Customer Service)

Indicating the device information

Fig. 125

Fig. 126

▶ Carry out action steps according to the illustration.
▷ Display indicates device information.

Software

Use this function to indicate the software version of your device.

Indicating the software version

Fig. 127

Fig. 128

▶ Carry out action steps according to the illustration.
▷ Display indicates software version.

Start defrosting cycle*

Use this function to start the automatic defrosting cycle manually if it does not start automatically in the event of a fault.

This function applies to NoFrost devices.*

Starting defrosting cycle

Fig. 129

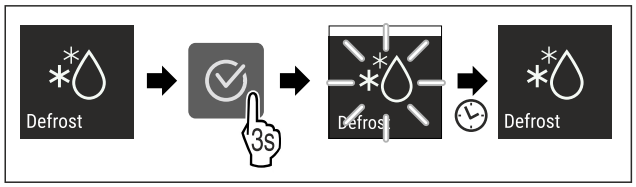

Fig. 130

▶ Carry out action steps according to the illustration.
▷ Defrosting cycle has started: Icon flashes until defrosting cycle is automatically completed.
▷ When defrosting cycle is finished: The device continues to run in normal mode.

Cancelling defrosting cycle

The defrosting cycle will be stopped automatically. However, you can also cancel the defrosting cycle at any time during the defrosting process:

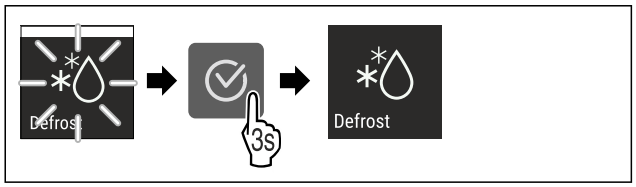

Fig. 131

▶ Carry out action steps according to the illustration.
▷ Defrosting cycle is cancelled.
▷ The device continues to run in normal mode.

Door alarm

Use this function to activate or deactivate the door alarm. The door alarm sounds if the door is open for too long. The door alarm is activated on delivery. You can set how long the door may be open before the door alarm sounds.

The following values can be set:

- 1 minute
- 2 minutes
- 3 minutes
- Off

Setting the door alarm

Fig. 132

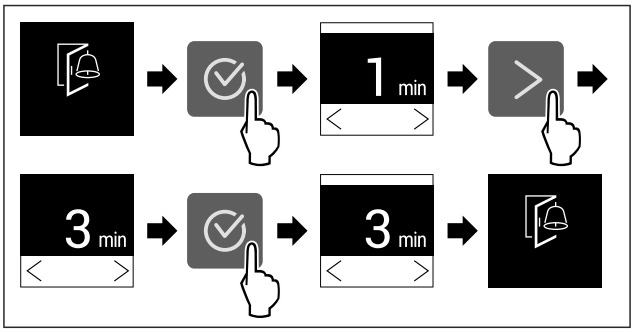

Fig. 133 Example illustration: Change door alarm from 1 minute to 3 minutes.

▶ Carry out action steps according to the illustration.
▷ The door alarm is set.

Deactivating the door alarm

Fig. 135

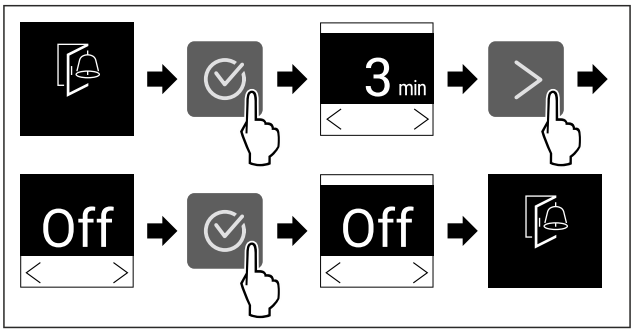

Fig. 136

▶ Carry out action steps according to the illustration.
▷ The door alarm is deactivated.

Demo mode

Demo mode is a special feature for dealers who want to demonstrate appliance features. If you activate demo mode, all refrigeration functions are deactivated.

If you switch on your appliance and “Demo” appears in the status display, then demo mode is already activated.

If you activate and then deactivate demo mode, the appliance will be reset to factory defaults. (see Resetting to factory settings)

Activating demo mode

Fig. 137

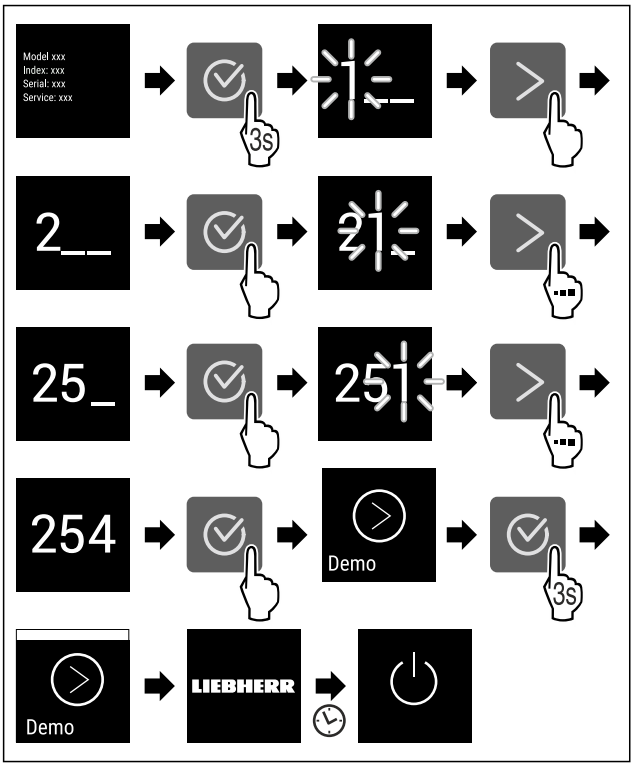

Fig. 138

▶ Carry out action steps according to the illustration.
▷ Demo mode is activated.
▷ Appliance is switched off.
▶ Switch on the appliance. (see 5.1 Switching on appliance (first use))
▷ “DEMO” appears in the status display.

Deactivating demo mode

Fig. 139

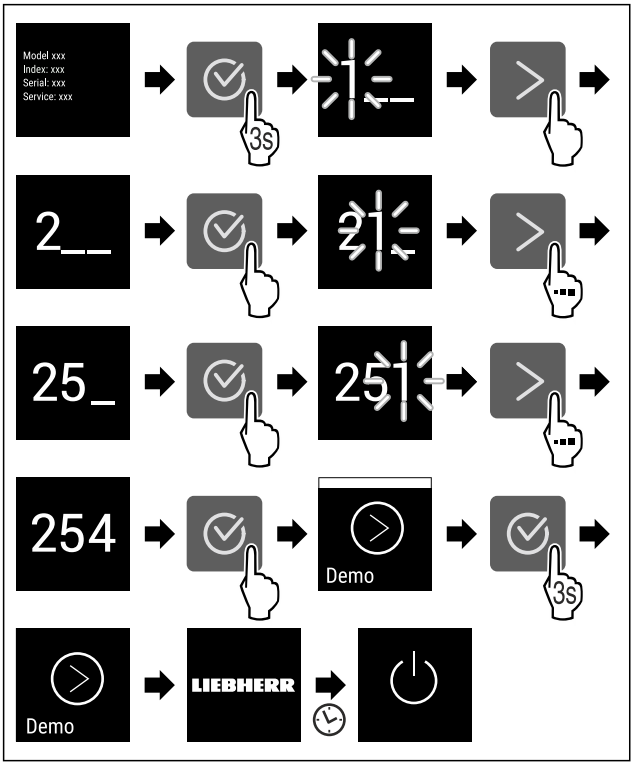

Fig. 140

▶ Carry out action steps according to the illustration.
▷ Demo mode is deactivated.
▷ Appliance is switched off.
▶ Switch on the appliance. (see 5.1 Switching on appliance (first use))
▷ Appliance is reset to factory settings.

Resetting to factory settings

Use this function to reset all settings to factory defaults. All settings you have made so far are reset to their original settings.

Performing a reset

Fig. 141

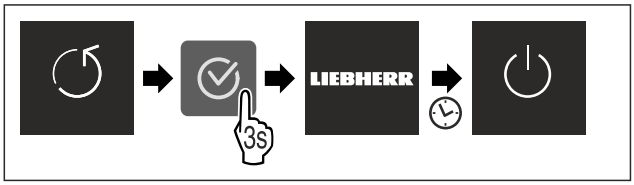

Fig. 142

▶ Carry out action steps according to the illustration.
▷ Device is reset.
▷ Device is switched off.
▶ Restart the device. (see 5.1 Switching on appliance (first use))

8.3 Messages

There are two categories of messages:

Category	Importance
Warning	Warnings appear in the event of a door alarm or malfunction. Simple warnings can be cancelled by yourself. In the event of serious malfunctions, you must contact customer service. (see 11.4 Customer Service)
Reminder	Reminders remind you of general processes. You can carry out these operations to end the message.

8.3.1 Overview of warnings

Behaviour of the appliance in the event of warnings:

- Warning appears on the display.
- The alarm tone sounds at an ever-increasing volume.
- The interior lighting pulsates for some warnings.

Message	Cause	Exit the message
Door alarm	The message appears if the door is open for too long.	Carry out action steps. (see Door alarm)

Message	Cause	Exit the message
Power outage alarm	The message appears if the freezing temperature has risen due to a power failure.	Carry out action steps. (see Power outage alarm)
Temperature alarm	The message appears if the freezing temperature does not correspond to the set temperature.	Carry out action steps. (see Temperature alarm)
Error	The message appears if there is an appliance error. A component of the appliance has a fault.	Carry out action steps. (see Error)

8.3.2 Ending warnings

Door alarm

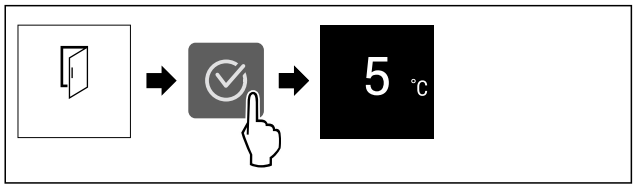

Fig. 143 Example illustration

▶ Carry out action steps according to the illustration.

-or-

▶ Close the door.

▷ The display returns to the status indicator.
▷ The appliance cools more vigorously, which means that the temperature shown on the display may be higher than the actual temperature inside the appliance.*
▷ Appliance noises can be louder.*

You can set how long the door may be open before the door alarm sounds. (see Setting the door alarm)

Power outage alarm

When the power failure has ended, the appliance will automatically cool down to the previously set target temperature without you having to confirm the message. However, for the message to disappear from the display, you must confirm it.

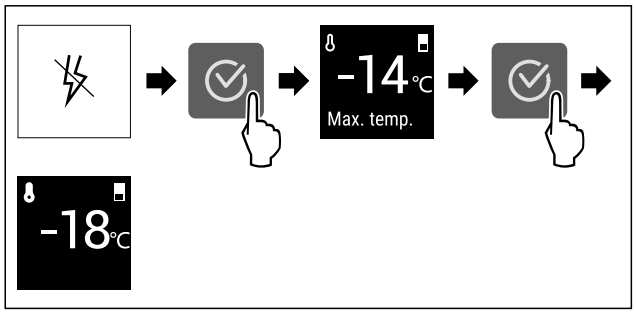

Fig. 144 Example illustration

▶ Press the confirmation symbol.
▷ Warmest freezing temperature is displayed.
▷ If the freezing temperature was below -9 °C: Food can still be consumed.
If the freezing temperature has risen above -9 °C:
▶ Check the food.
▶ Press the confirmation symbol.
▷ The display returns to the status indicator: Current temperature and target temperature are displayed.

Temperature alarm

Temperature differences can be caused by:

- You have put in warm, fresh food.
- Too much warm air has got in while you were sorting out the freezer or removing items.
- There has been a longer power failure.
- The appliance is faulty.

▶ Eliminate causes.
▷ The appliance cools to the target temperature set previously.

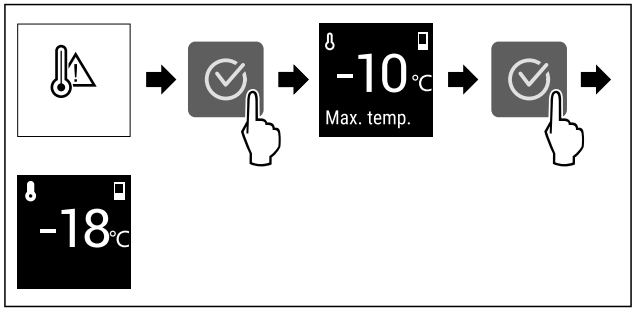

Fig. 145 Example illustration

▶ Press the confirmation symbol.
▷ Warmest freezing temperature is displayed.
▷ If the freezing temperature was below -9 °C: Food can still be consumed.
If the freezing temperature has risen above -9 °C:
▶ Check the food.
▶ Press the confirmation symbol.
▷ The display returns to the status indicator: Current temperature and target temperature are displayed.

Error

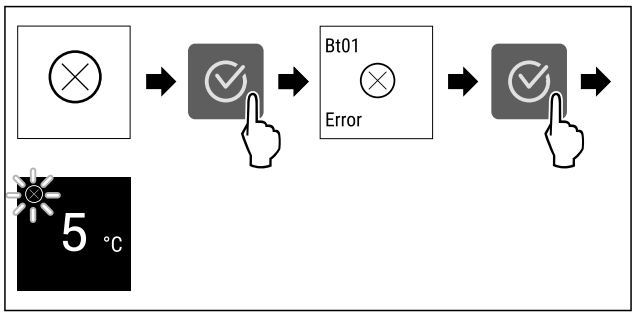

Fig. 146 Example illustration

▶ Press the confirmation symbol.
▷ Error code is displayed.
▶ Note the error code.
▶ Press the confirmation symbol.
▷ The display returns to the status indicator.
▶ Contact Customer Service. (see 11.4 Customer Service)

8.3.3 Overview of reminders

Behaviour of the appliance during reminders:

- Reminder appears on the display.
- Alarm tone sounds.
- The interior lighting pulsates for some reminders.

The following reminders can be deactivated (see Deactivating the reminder) :

- Replace the FreshAir activated carbon filter

*** Depending on model and options**

Message	Cause	Exit the message
FreshAir **Replace the FreshAir activated carbon filter**	The message appears when the FreshAir activated carbon filter needs to be replaced.	Carry out action steps. (see Replace the FreshAir activated carbon filter)

8.3.4 Ending reminders

Replace the FreshAir activated carbon filter

Liebherr recommends: Replace the FreshAir activated carbon filter every 6 months.

Note
FreshAir activated charcoal filters can be purchased from the Liebherr-Hausgeräte store at go.liebherr.com/47wtc4.

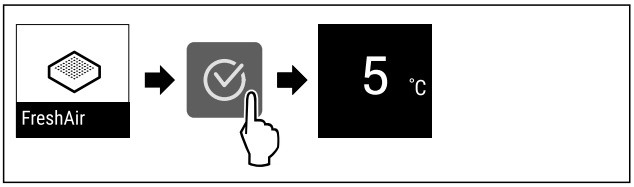

Fig. 147 Example illustration

▶ Press the confirmation symbol.
▶ Replace the activated carbon filter. (see 10.1 FreshAir carbon filter)
▷ Activated carbon filter ensures optimum air quality in the cooling unit.
▷ Reminder appears again after 6 months.

If you no longer wish to receive this reminder, you can deactivate it. (see Deactivating the reminder)

9 Features

9.1 Door rack

Door racks are suitable for storing drinks and food. You can move door racks for your own individual use and take them apart for cleaning. However, Liebherr recommends using the door racks in the position in the door as delivered from the factory.

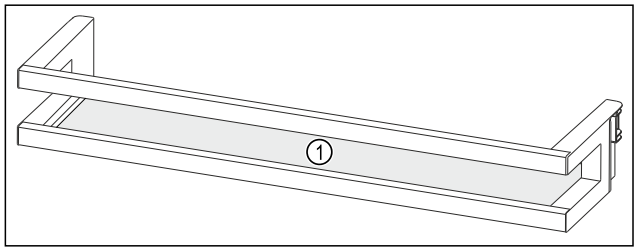

Fig. 148 Example illustration, Door rack
(1) Shelf

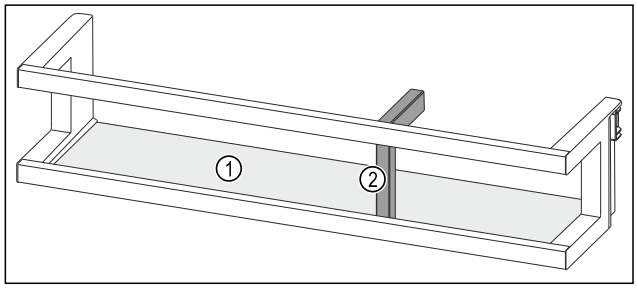

Fig. 149 Example illustration, Door rack with bottle holder
(1) Shelf **(2)** Bottle holder

The following table shows examples of what can be stored in each door rack.

Door rack	Food
Door rack (see Fig. 148)	Butter, cheese, tinned food, tubes
Door rack with bottle holder (see Fig. 149)	Bottles The sliding bottle holder secures the bottles in the door rack.

9.1.1 Removing the door rack

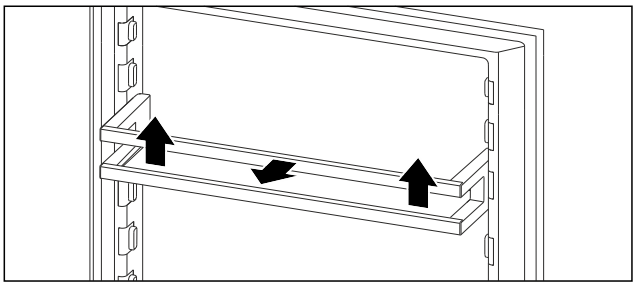

Fig. 150 Example illustration

▶ Push the door rack upwards.
▶ Pull the door rack forward.

9.1.2 Inserting the door rack

CAUTION
Risk of injury and damage to the appliance due to incorrectly stored food or objects!
If you place food or objects on the bottom glass shelf, the door may not close properly. This could cause the door racks to break, food or objects to fall out and cause injury.
▶ Keep the front area of the bottom glass shelf clear.

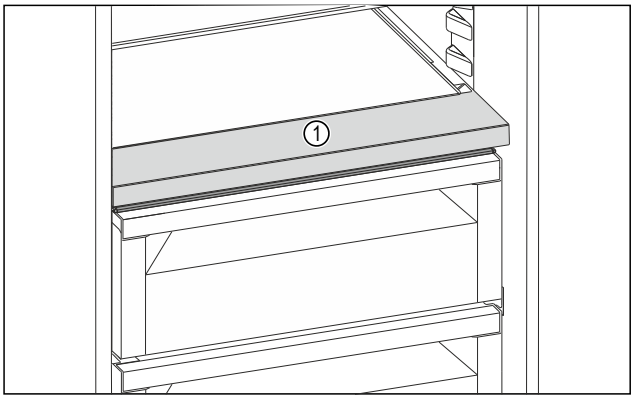

Fig. 151 Example illustration
(1) Front area

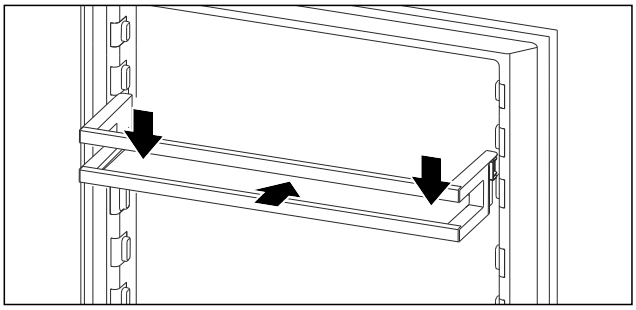

Fig. 152 Example illustration

▶ Slide in the door rack.
▶ Press the door rack down.

9.2 Shelves

There are different storage areas depending on the type of appliance:

- Single-piece shelf
- Divisible shelf*
- Shelf above the EasyFresh Safe

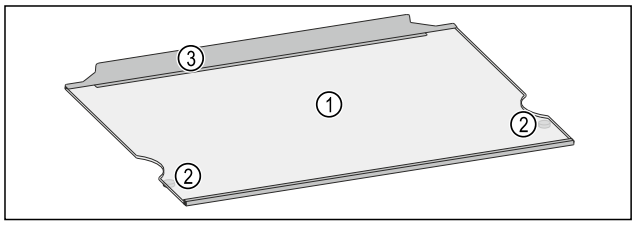

Fig. 153 Example illustration, Shelf with stop edge

(1) Shelf
(2) Drawer stop
(3) Stop edge

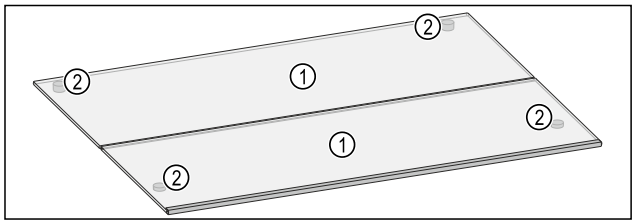

*Fig. 154 Example illustration, divisible shelf**

(1) Shelf
(2) Drawer stop

9.2.1 Using the shelves in the fridge section

The shelves can either be adjusted in height, or removed completely or for cleaning.

Ensure that the following requirements are met:

❑ Shelves are empty.

Removing the shelf

The shelves are secured against accidental pulling out by means of drawer stops.

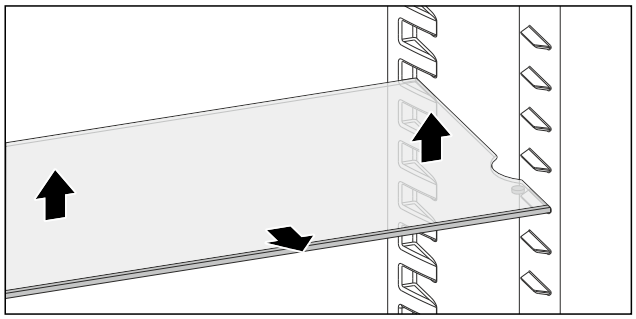

Fig. 155

▶ Raise the shelf.
▶ Pull out the shelf forwards.

-or-

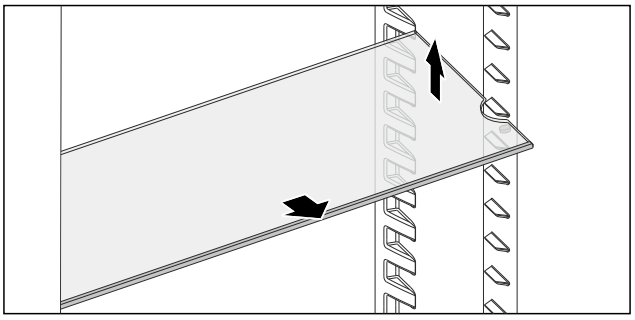

Fig. 156

▶ Easier removal: Tilt the shelf and pull it out forwards.

▷ Shelves have been removed.
▷ The shelves can be positioned at a different height.

Inserting the shelf

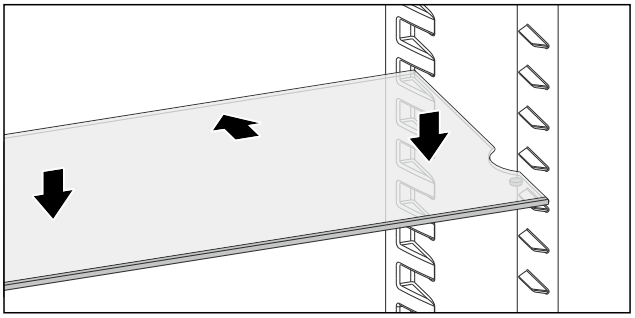

Fig. 157

When the drawer stop points downwards:

▶ Pull the shelf out as far as it will go.
▶ Lower the shelf.

-or-

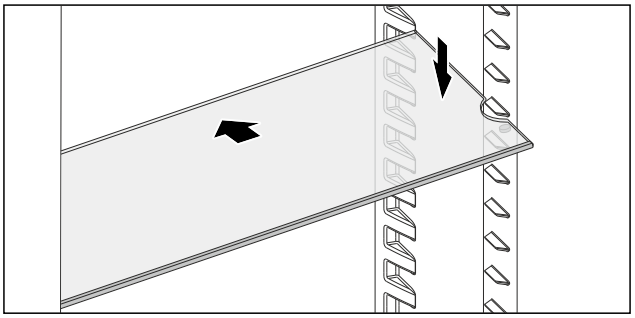

Fig. 158

▶ Slide the shelf in at an angle and lower it.

▷ The drawer stops are located behind the front support surface.

9.2.2 Using modular shelves*

The divisible shelf can be pushed together in its factory-set position, adjusted in height, or removed for cleaning.

Ensure that the following requirements are met:

❑ Shelves are empty.

Pushing the divisible shelf together

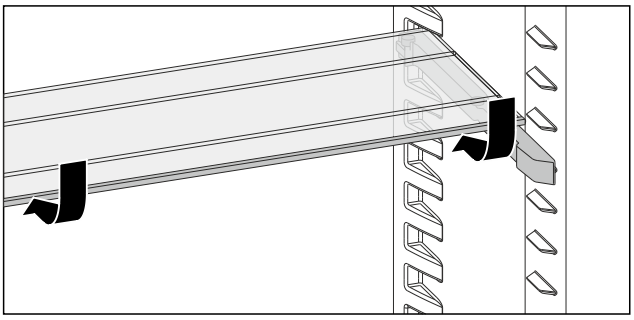

Fig. 159

▶ Slide the front shelf into place as shown in the illustration.
▷ The divisible shelf is pushed together.
▷ There is space for taller items on the shelf below.

Using both divisible shelves

▶ Grasp the pull-out shelf with one hand and pull it forwards.
▷ The trim strip is at the front.
▷ The drawer stops point downwards.

Adjusting the height of the divisible shelves

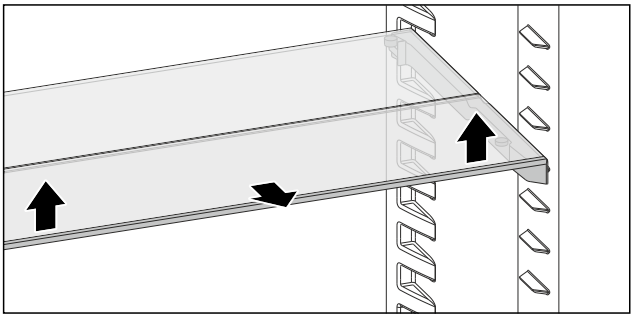

Fig. 160

▶ Lift the front shelf forwards.
▶ Pull out the front shelf forwards.

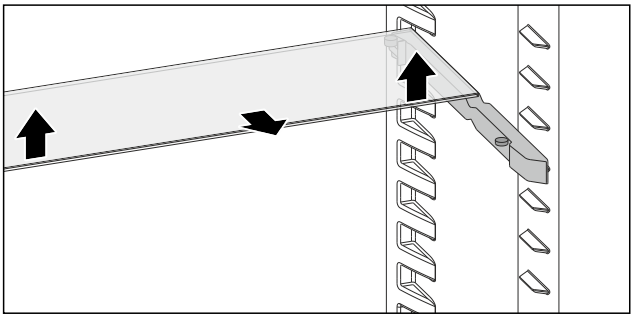

Fig. 161

▶ Repeat these steps for the rear shelf as well.

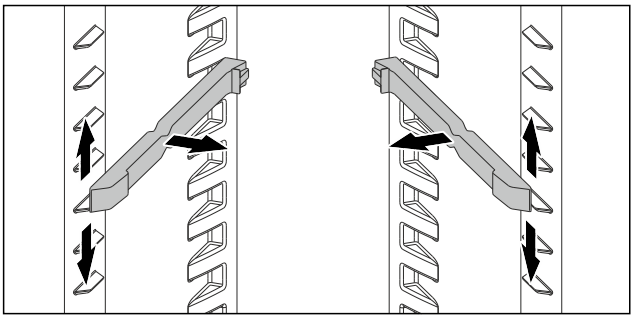

Fig. 162

▶ Pull out the support rails.
▶ Insert the support rails at the desired height.

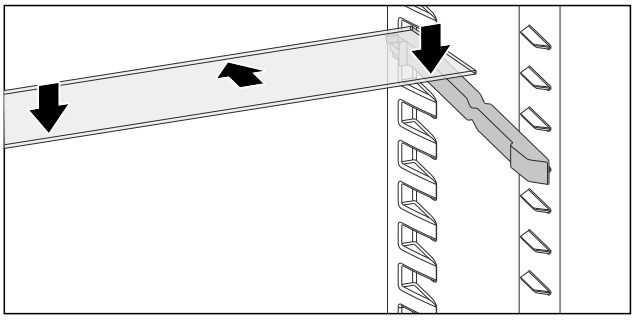

Fig. 163

▶ Push the storage shelf, with the high drawer stops, all the way in.
▶ Lower the shelf.
▷ The drawer stops are located behind the rear support surface.

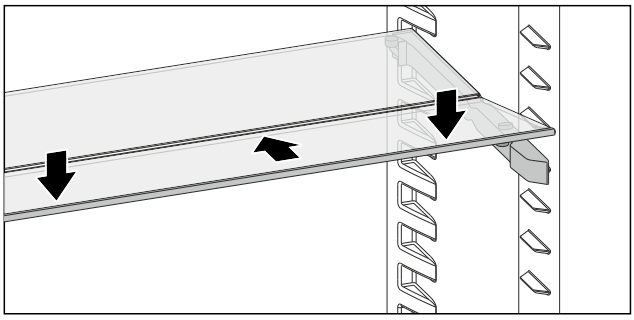

Fig. 164

▶ Repeat these steps for the front shelf as well.

Removing the divisible shelf

The divisible shelves can be removed by moving them into position. (see Adjusting the height of the divisible shelves)

9.2.3 Removing/inserting the shelf above the EasyFresh Safe

The shelf above the EasyFresh Safe can be removed for cleaning.

Removing the shelf

Ensure that the following requirements are met:

❑ Shelf is empty.

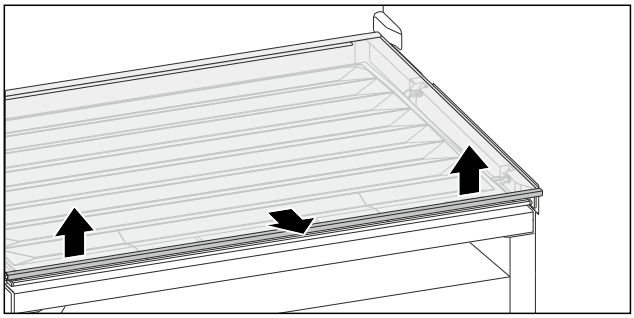

Fig. 165

▶ Lift the shelf forwards.
▶ Pull out the shelf forwards.
▷ The compartment lid is visible.

Note
Liebherr recommends:

Do not place any items on the compartment lid below.

Inserting the shelf

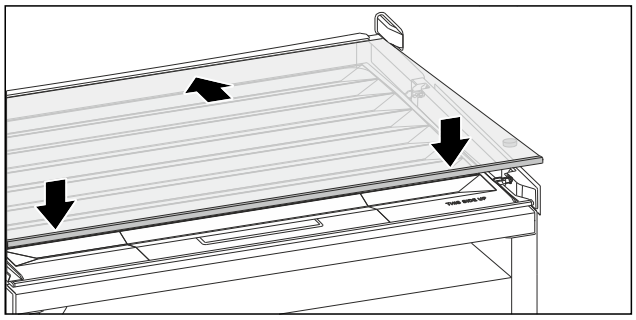

Fig. 166

When the drawer stop points downwards:

▶ Place the shelf at an angle, sloping it downwards and backwards.
▶ Lower the front section.
▷ The drawer stops are located behind the front support surface.

9.3 VarioSafe *

The VarioSafe offers space in the refrigerator compartment for small groceries, packages, tubes and jars, for example.

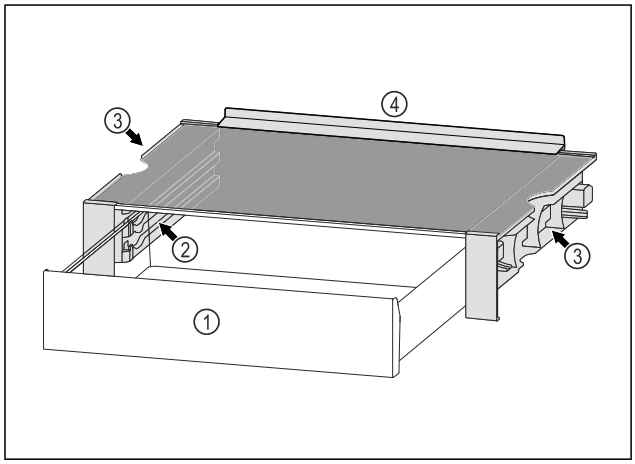

Fig. 167

(1) VarioSafe drawer
(2) Side panels with ribs for VarioSafe drawer
(3) Recesses on the left and right side panel
(4) Stop edge

9.3.1 Inserting the VarioSafe

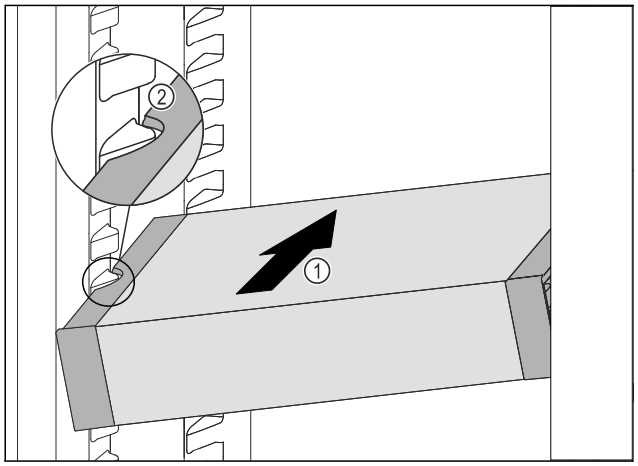

Fig. 168

▶ Insert the VarioSafe into the fridge section at an angle *Fig. 168 (1)* until the recesses in the side *Fig. 168 (2)* of the VarioSafe are at the level of the support rib in the fridge section.

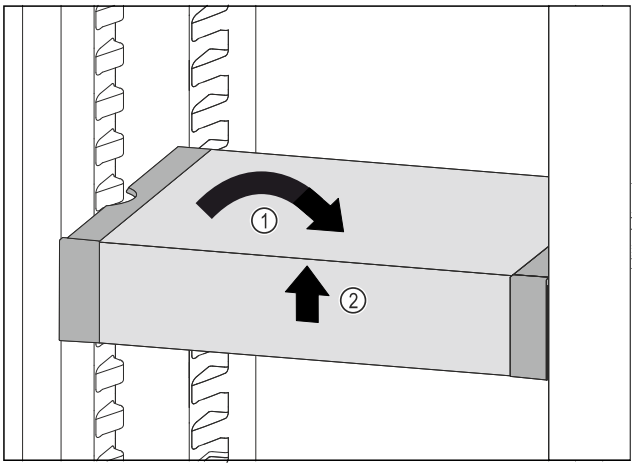

Fig. 169

▶ Set VarioSafe straight. *Fig. 169 (1)*
▶ Lift VarioSafe at the front. *Fig. 169 (2)*

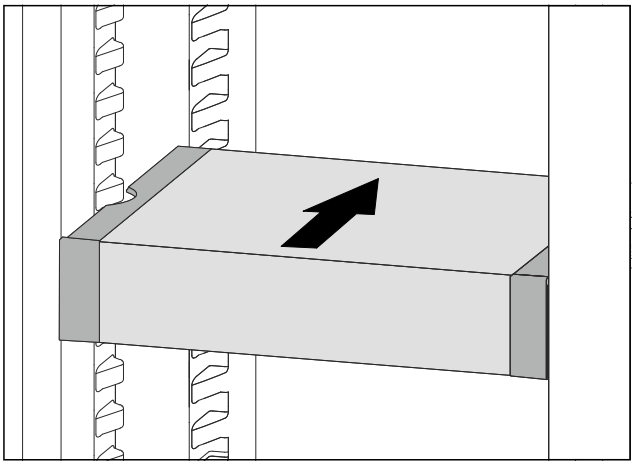

Fig. 170

▶ Lift VarioSafe up toward the front.
▶ Push VarioSafe in to the rear.
▶ Lower VarioSafe.
▷ VarioSafe audibly engages.
▷ VarioSafe is inserted.

9.3.2 Repositioning the VarioSafe

You can move the VarioSafe as a whole in the refrigerator compartment.

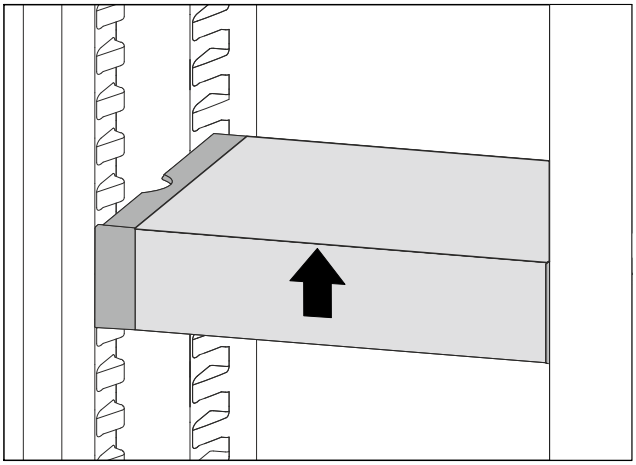

Fig. 171

▶ Lift VarioSafe at the front.

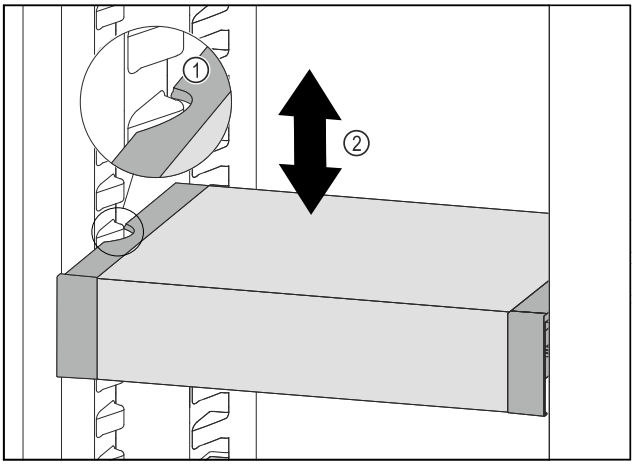

Fig. 172

▶ Pull VarioSafe forwards until the recesses in the side of the VarioSafe are at the level of the support rib in the refrigerator compartment. *Fig. 172 (1)*

▶ Move VarioSafe up or down in the refrigerator compartment until the desired height is reached. *Fig. 172 (2)*

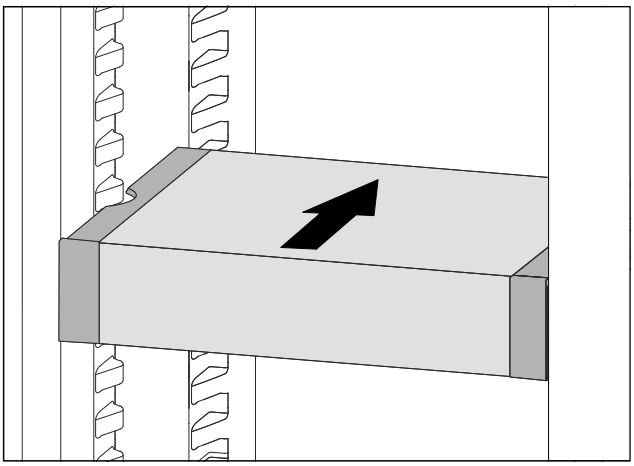

Fig. 173

▶ Lift VarioSafe at the front.

▶ Push VarioSafe in to the rear.

▷ VarioSafe audibly engages.

▷ VarioSafe is offset in height.

9.3.3 Moving the VarioSafe drawer

You can use the VarioSafe drawer at two different heights. If you would like to store taller foodstuffs in the VarioSafe drawer, slide the VarioSafe drawer in on the bottom rib. If you would like to store smaller foodstuffs in the VarioSafe drawer, slide the VarioSafe drawer in on the top rib.

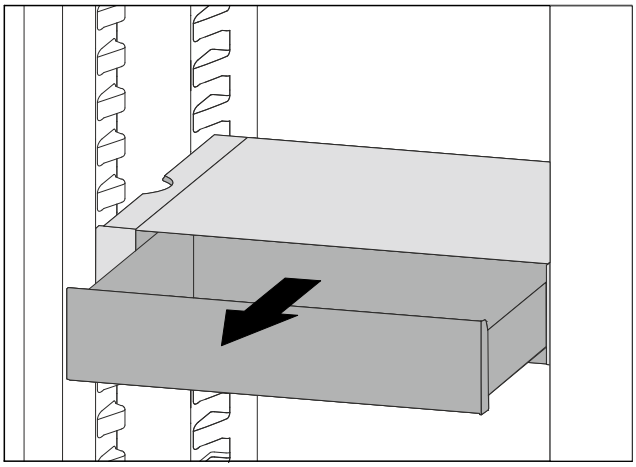

Fig. 174

▶ Pull out the VarioSafe drawer as far as it will go.

▶ Lift the VarioSafe drawer up at the front.

▶ Remove the VarioSafe drawer to the front.

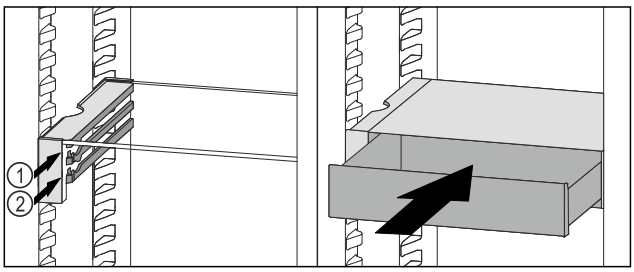

Fig. 175

▶ Lift the VarioSafe drawer up at the front.

▶ Place the VarioSafe drawer behind the stoppers on desired rib *Fig. 175 (1)* or *Fig. 175 (2)*.

▷ VarioSafe drawer is offset in height.

9.3.4 Removing the VarioSafe

You can remove the VarioSafe as a whole.

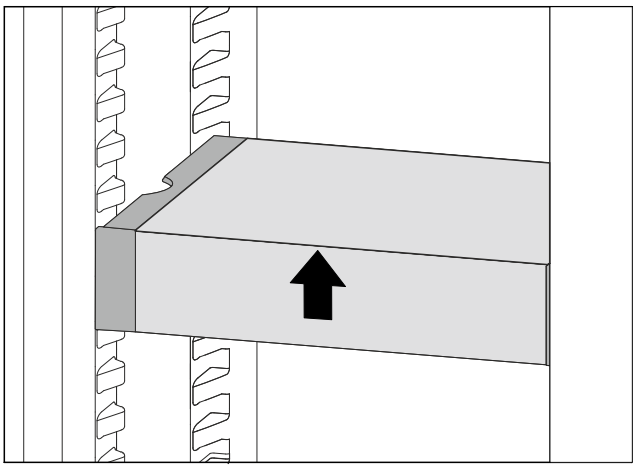

Fig. 176

▶ Lift VarioSafe at the front.

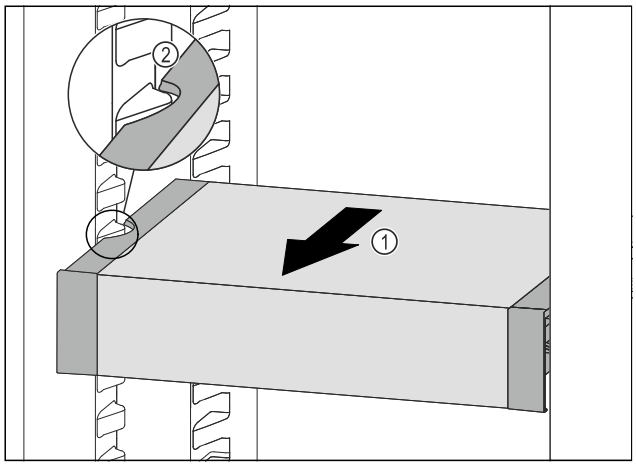

Fig. 177

▶ Pull VarioSafe forwards *Fig. 177 (1)* until the recesses in the side of the VarioSafe are at the level of the support rib in the fridge section. *Fig. 177 (2)*

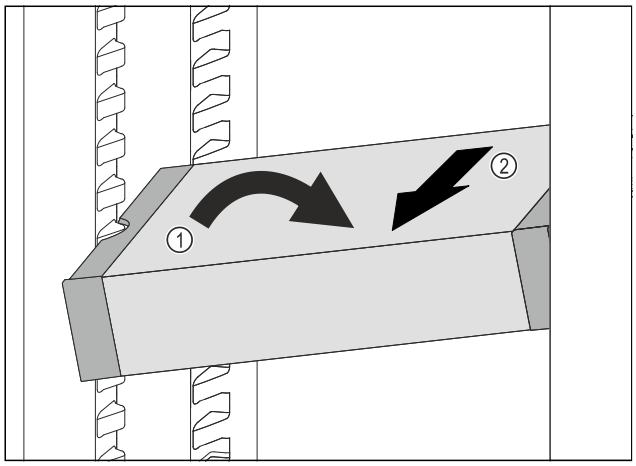

Fig. 178

▶ Set VarioSafe in refrigerator compartment at an angle. *Fig. 178 (1)*

▶ Take VarioSafe out to the front. *Fig. 178 (2)*

▷ VarioSafe is removed.

9.3.5 Disassembling the VarioSafe

You can disassemble the VarioSafe into its individual parts if you want to clean the VarioSafe or if you need to install or remove parts.

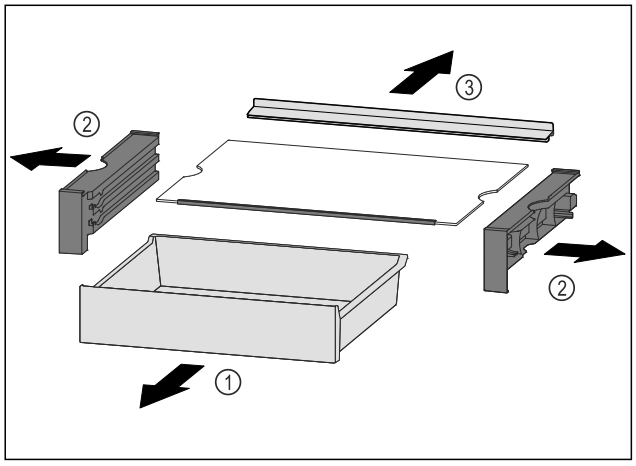

Fig. 179

▶ Remove VarioSafe as a whole. (see 9.3.4 Removing the VarioSafe)

▶ Disassemble VarioSafe according to the illustration.

9.4 Space for baking tray

There is space for a baking tray *()* above the drawers.

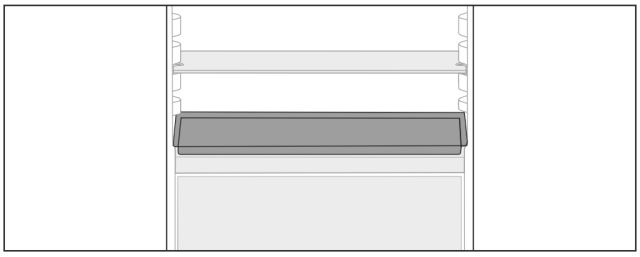

Fig. 180

Ensure that the following conditions are met:

- ❑ Max. baking tray dimensions are adhered to (see 11.1 Technical specifications) .
- ❑ Baking tray is cooled to room temperature.
- ❑ The lowest door rack is set at least one position higher.

With the door open to 90°:

▶ Slide the baking tray onto the lower side runners.

9.5 Drawers

You can remove the drawers for cleaning.

You can remove the drawers to use VarioSpace.

The way to remove/insert the drawers varies depending on the pull-out system. Your appliance can contain various pull-out systems.

For appliances with NoFrost:*

Note
The energy consumption increases and the cooling power goes down if ventilation is not sufficient.*

▶ Leave the bottom drawer inside the appliance.*

▶ Always keep the inside vents at the rear wall clear.*

For appliances without NoFrost:*

Note
The energy consumption increases and the cooling power goes down if ventilation is not sufficient.*

▶ Always keep the inside vents at the rear wall clear.*

9.5.1 Drawer on appliance base or glass shelf

The drawer runs directly on the appliance base or on a glass shelf. There are no rails.

When you remove the drawers, you can use the glass shelves below them as storage shelves.

Removing drawer

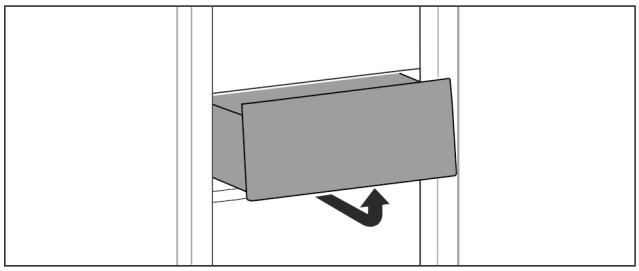

Fig. 181

▶ Remove drawer as shown in the illustration.

Inserting drawer

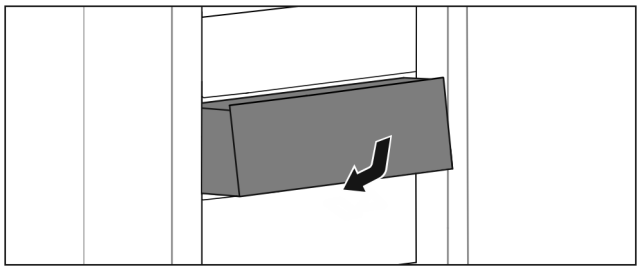

Fig. 182

▶ Insert drawer as shown in the illustration.

9.5.2 Drawer on rails

Removing drawer

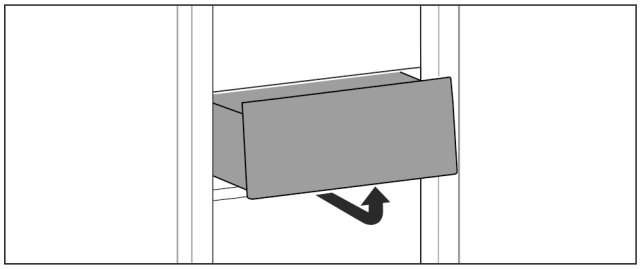

Fig. 183

▶ Remove drawer as shown in the illustration.

Inserting drawer

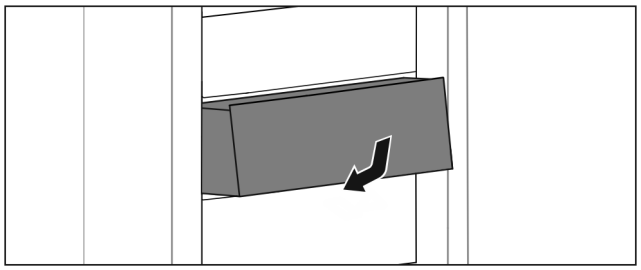

Fig. 184

▶ Insert drawer as shown in the illustration.

9.5.3 Drawer on telescopic rails

The drawer runs on extendible rails (telescopic rails). There are fully extendible telescopic rails and telescopic rails with partial pull-out. Drawers which are fully extendible can be pulled out fully from the appliance. Drawers with partial pull-out cannot be removed fully from the appliance. The system in your appliance depends on the type of appliance.

Fully extendible*

If you have fully extendible rails, there is a clamp located at the back on the left and right of the rail.

Removing drawer

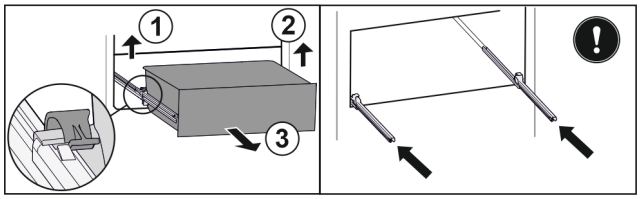

Fig. 185

▶ Pull out drawer as far as it will go.
▶ Lift left clamp and simultaneously pull drawer forwards on the left. *Fig. 185 (1)*
▶ Lift right clamp and simultaneously pull drawer forwards on the right. *Fig. 185 (2)*
▶ Remove drawer to the front. *Fig. 185 (3)*
▶ Slide rails in.

Inserting drawer

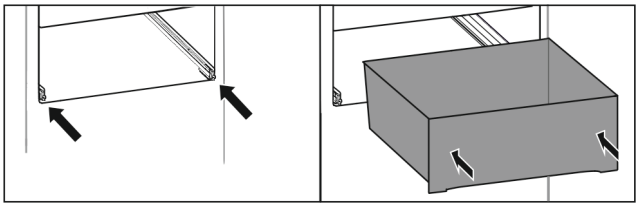

Fig. 186

▶ Slide rails in.
▶ Place drawer on rails.
▶ Slide in drawer to the back.
▷ Drawer latches in audibly at the back.

Partial pull-out fridge compartment*

Removing drawer

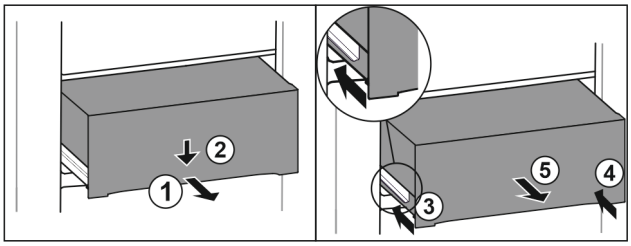

Fig. 187

▶ Pull out drawer half-way. *Fig. 187 (1)*
▶ Push the drawer down at the front. *Fig. 187 (2)*
▶ Push the left rail in by about 2 cm. *Fig. 187 (3)*
▶ Push the right rail in by about 2 cm. *Fig. 187 (4)*
▶ Remove drawer to the front. *Fig. 187 (5)*

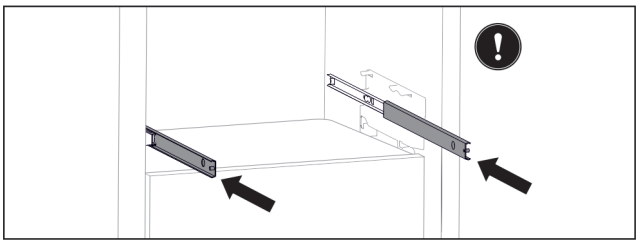

Fig. 188

If the rails are not yet fully inserted after removing the drawer:

▶ Push rails in completely.

Inserting drawer

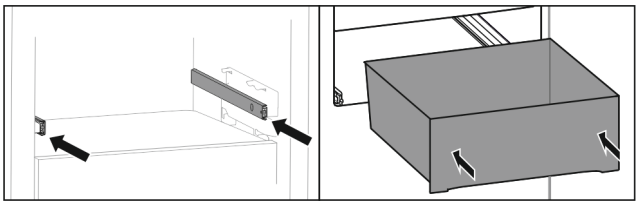

Fig. 189

▶ Slide rails in.
▶ Place drawer on rails.
▶ Slide in drawer to the back.

9.6 Compartment lid for EasyFresh Safe

The compartment lid ensures constant levels of humidity.

The compartment lid is directly on the drawer and can be covered by shelves or additional drawers.

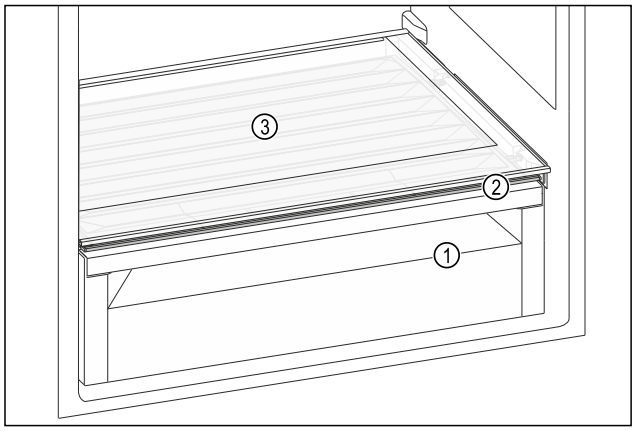

Fig. 190 Example illustration, compartment lid for EasyFresh Safe

(1) EasyFresh Safe
(2) Compartment lid for EasyFresh Safe
(3) Shelf

9.6.1 Reducing the air humidity in the drawer

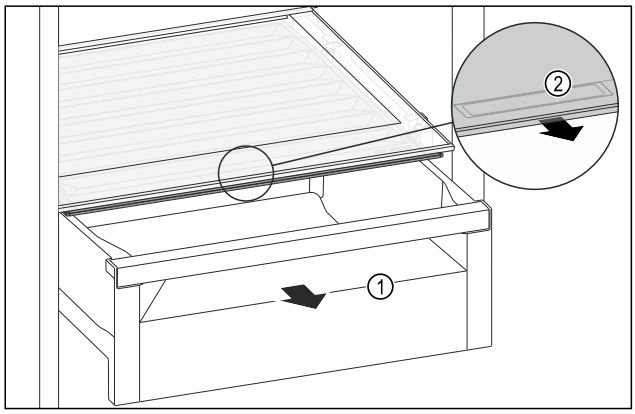

Fig. 191

▶ Pull out the drawer *Fig. 191 (1)*.
▶ Grasp the recessed grip *Fig. 191 (2)* on the compartment lid and pull the compartment lid forwards at the same time.
▷ When the drawer is closed, there is a small gap between the compartment lid and the drawer.

9.6.2 Increasing the air humidity in the drawer

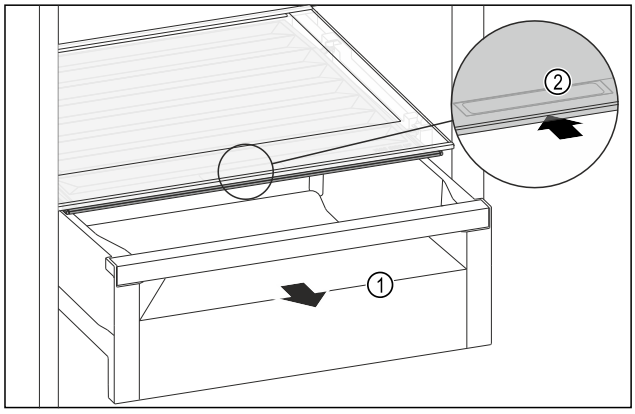

Fig. 192

▶ Pull out the drawer *Fig. 192 (1)*.
▶ Grasp the recessed grip *Fig. 192 (2)* on the compartment lid and push the compartment lid backwards at the same time.
▷ When the drawer is closed, the compartment lid seals with the drawer.

9.7 Glass shelves

You can remove the glass shelves under the drawers for cleaning.

You can remove the glass shelves under the drawers to use VarioSpace.

9.7.1 Removing / inserting the glass shelf

Make sure that the following requirements are fulfilled:

❑ Glass shelf under the drawer: The drawer has been removed. (see 9.5 Drawers)

Removing glass shelf

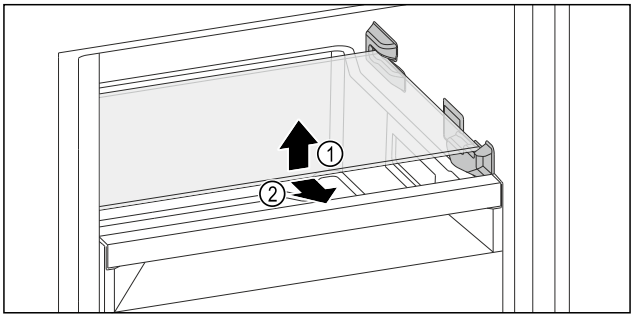

Fig. 193 Example illustration, glass shelf

▶ Lift the glass shelf forwards.
▶ Remove the glass shelf forwards.

Inserting glass shelf

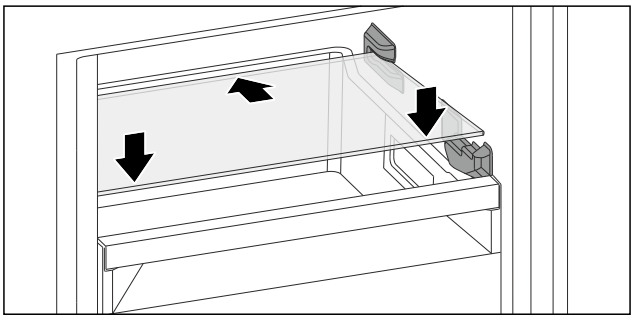

Fig. 194 Example illustration, glass shelf

▶ Place the glass shelf at an angle behind the stoppers.
▶ Lower glass shelf.
▶ Slide in glass shelf to the back.

9.8 VarioSpace

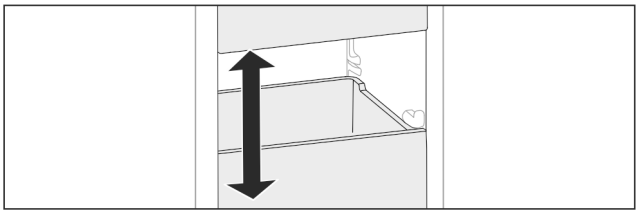

Fig. 195

You can remove drawers and glass panels from your appliance. This provides more room for large food items such as poultry, joints of meat, large game, and tall baked products. You can then freeze these items whole for later preparation.

▶ Note the weight limits on the drawers and glass panels (see 11.1 Technical specifications) .

9.9 Bottle holder

9.9.1 Using the bottle holder

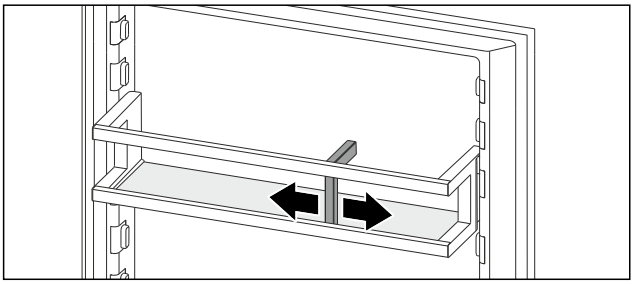

Fig. 196

▶ Push the bottle holder onto the bottles.
▷ The bottles are prevented from falling over.

9.10 FlexCube*

The FlexCube has different sized openings, so you can store small items such as tubes, open yoghurt pots or quail eggs in it. The FlexCube fits into all Liebherr door racks, for example. If necessary, you can also set up several FlexCubes next to each other.

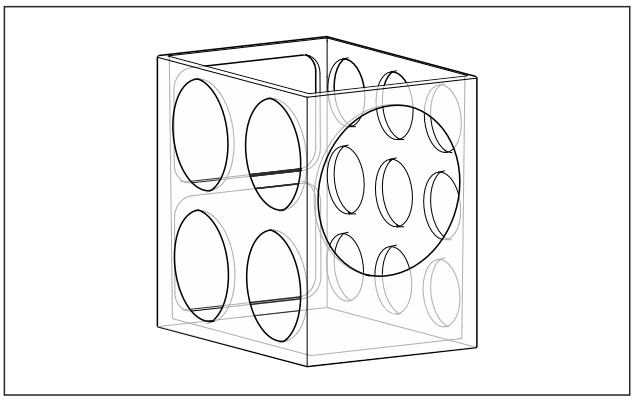

Fig. 197 Example illustration

Note
These accessories can be purchased from the Liebherr-Hausgeräte shop at go.liebherr.com/47wtc4.

9.10.1 Using the FlexCube

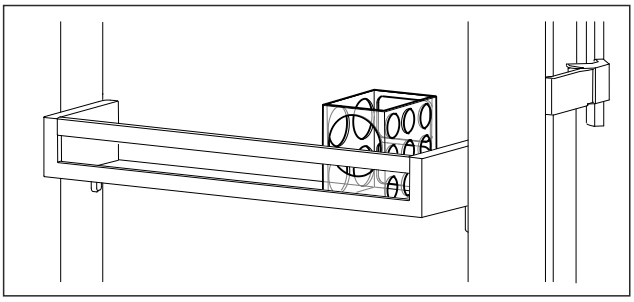

Fig. 198 Example illustration

▶ Insert the FlexCube in the door rack.
-or-

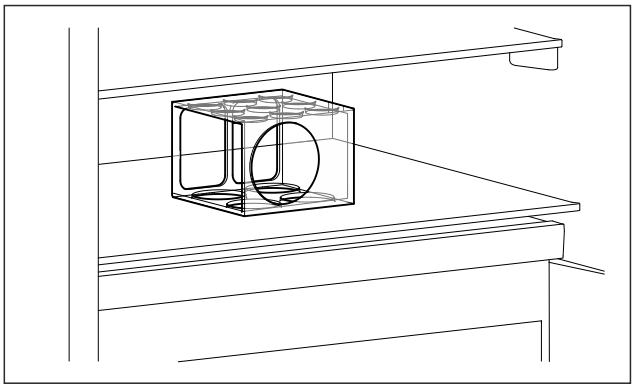

Fig. 199 Example illustration

▶ Place FlexCube on shelf.

▶ Sort small parts into the FlexCube for storage.

10 Maintenance

10.1 FreshAir carbon filter

The FreshAir carbon filter is in the compartment above the fan.

It guarantees the best air quality.

- ❑ Replace the carbon filter every 6 months.
  When the reminder is set, a message on the display prompts you to change it.
- ❑ The carbon filter can be disposed of with the regular household waste.

Note
FreshAir activated charcoal filters can be purchased from the Liebherr-Hausgeräte store at go.liebherr.com/47wtc4.

10.1.1 Removing the FreshAir carbon filter

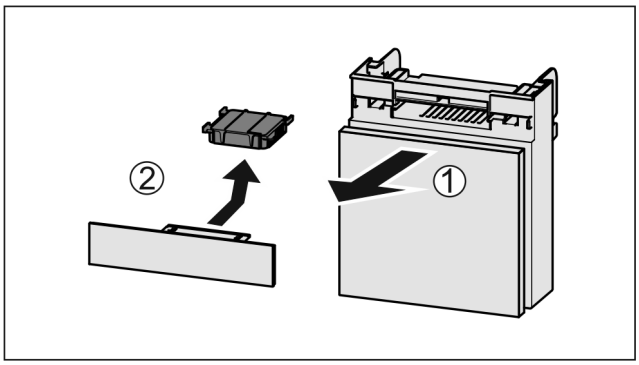

Fig. 200

▶ Pull out the compartment *Fig. 200 (1)*.
▶ Remove the carbon filter *Fig. 200 (2)*.

10.1.2 Inserting the FreshAir carbon filter

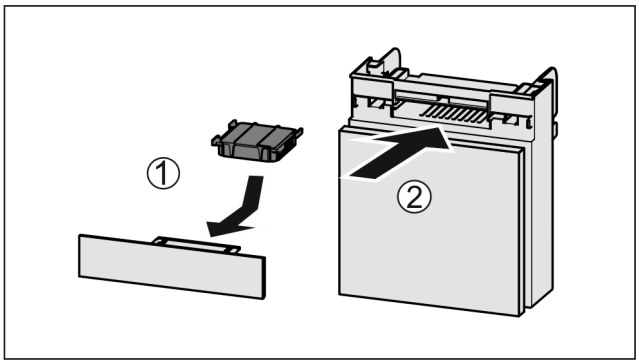

Fig. 201

▶ Insert the carbon filter as shown in the diagram *Fig. 201 (1)*.
▷ The carbon filter clicks into place.
If the carbon filter is pointing downwards:
▶ Push the compartment in *Fig. 201 (2)*.
▷ The carbon filter is now ready for use.

10.2 Removing / inserting the bottle holder

10.2.1 Removing the bottle holder

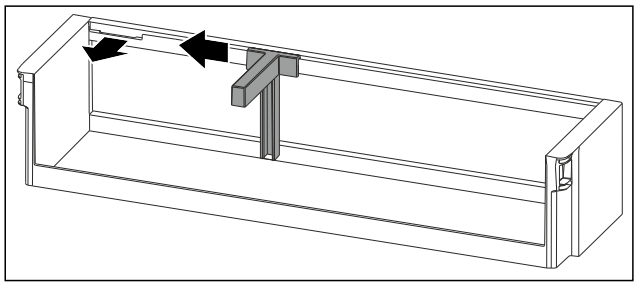

Fig. 202

▶ Slide the bottle holder to the side as far as the recess.
▶ Remove the bottle holder forwards.

10.2.2 Inserting the bottle holder

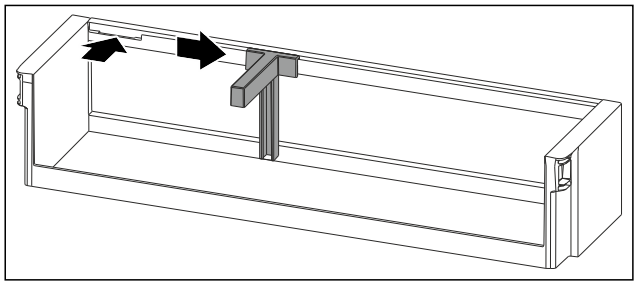

Fig. 203

▶ Insert the bottle holder in the recess.
▶ Push the bottle holder to the desired position to the side.

10.3 Disassembling / assembling pull-out systems

10.3.1 Notes on disassembly

You can disassemble some of the pull-out systems for cleaning. Your appliance can contain a variety of pull-out systems.

The following pull-out systems can be disassembled or cannot be disassembled:

Pull-out system	can be disassembled / cannot be disassembled
Drawer on appliance base or glass shelf	cannot be disassembled
Drawer on rails	cannot be disassembled
Fully extendible*	cannot be disassembled*
Fridge section partial pull-out*	cannot be disassembled*

10.4 Compartment lid for EasyFresh Safe

You can remove the compartment lid for cleaning.

10.4.1 Removing the compartment lid

Ensure that the following requirements are met:

❑ The shelf directly above the drawer has been removed. (see 9.2 Shelves)
❑ The drawer directly below the compartment lid has been removed. (see 9.5 Drawers)

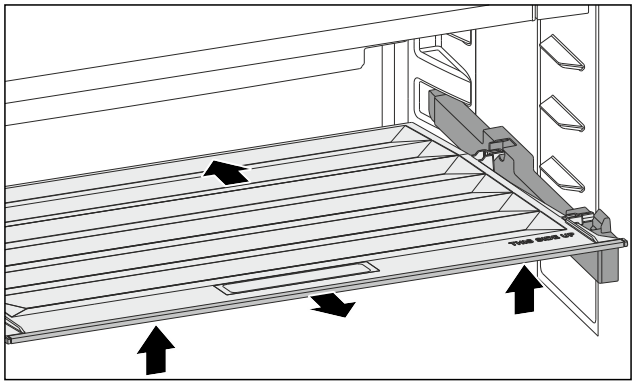

Fig. 204

▶ Push the compartment lid backwards.
▶ Lift the compartment lid forwards.
▶ Remove the compartment lid forwards and upwards at an angle.

10.4.2 Inserting the compartment lid

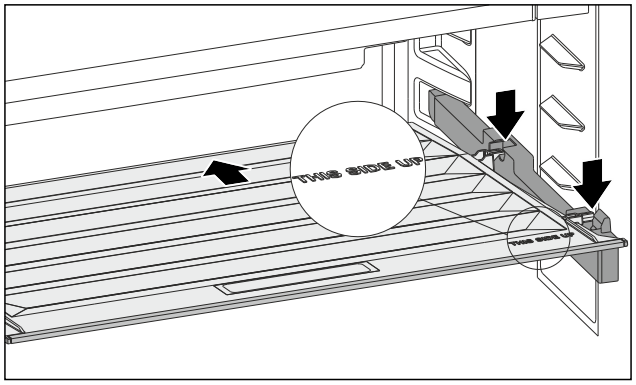

Fig. 205

If the THIS SIDE UP lettering is at the top:

▶ Insert the rear retaining parts into the relevant rear openings.
▶ Push the compartment lid backwards.
▶ Lower the compartment lid forwards and engage the front retaining parts into the openings.
▶ Move the compartment lid into the required position.

10.5 Defrosting the appliance

WARNING

Improper defrosting of the appliance!*
Injuries and damage.

▶ Do not use mechanical equipment or other methods to speed up the defrosting process other than those recommended by the manufacturer.
▶ Do not use electrical heating or steam-cleaning appliances, naked flames or defroster sprays to defrost.
▶ Do not use sharp objects to remove ice.

10.5.1 Defrosting the fridge compartment

Defrosting is performed automatically. The water from the thawing process drains through the outlet and evaporates.

Water drops or a thin layer of frost or ice can form on the back wall; this is a completely normal part of the appliance's function. This must not be removed.

A layer of frost or ice can from briefly due to the energy-optimised control of the device.*

A layer of frost or ice can from briefly due to the energy-optimised control of the device.*

▶ Clean the drain opening at regular intervals. (see 10.6 Cleaning the appliance)

10.5.2 Defrosting the freezer compartment with NoFrost*

Defrosting is performed automatically with the NoFrost system. The moisture is deposited on the evaporator, is periodically defrosted and evaporates.

The appliance does not have to be defrosted.

10.5.3 Defrosting the freezer compartment manually*

A layer of frost or ice forms after prolonged use.

The following factors promote the formation of frost or ice:

- The appliance is opened frequently.
- Hot food is put in.
  One day before defrosting:

▶ Activate the SuperFrost. (see 8.2 Appliance functions)
▷ Frozen goods have a "residual coldness".
▶ Switch the appliance off.
▶ Pull the mains plug out of the socket or switch the fuse off.
▶ Wrap the frozen produce in newspaper or blankets and store in a cool place.
▶ Place a pan of hot water (not boiling) on the middle shelf.

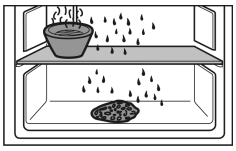

▷ This speeds up the defrosting process.
▶ Leave the appliance door open during defrosting.
▶ Remove loosened pieces of ice.
▶ Make sure that there is no melted ice water in the cabinet.
▶ Soak up the melted ice water with a sponge or cloth several times as necessary.
▶ Clean the appliance. (see 10.6 Cleaning the appliance)

10.6 Cleaning the appliance

10.6.1 Preparation

WARNING
Danger of electric shock!
▶ Remove the refrigerator connector or interrupt the power supply.

WARNING
Danger of fire!
▶ Do not damage the refrigeration circuit.

▶ Empty the appliance.
▶ Unplug the mains plug.
-or-
▶ Activate the CleaningMode. (see CleaningMode*) *

10.6.2 Cleaning the interior

NOTICE
Improper cleaning!
Damage to the appliance.
▶ Only use soft cleaning cloths and ph-neutral all-purpose cleaners.
▶ Do not uses abrasive sponges or steel wool which may cause scratches.
▶ Do not use any sharp or abrasive cleaning agents, nor any that contain sand, chloride or acid.

▶ Plastic surfaces: clean by hand with a soft clean cloth, lukewarm water and a little detergent.
▶ Metal surfaces: clean by hand with a soft clean cloth, lukewarm water and a little detergent.
▶ Drain hole: remove deposits using a thin item (for example a cotton bud).

10.6.3 Clean the components

NOTICE
Improper cleaning!
Damage to the appliance.
▶ Only use soft cleaning cloths and ph-neutral all-purpose cleaners.
▶ Do not uses abrasive sponges or steel wool which may cause scratches.
▶ Do not use any sharp or abrasive cleaning agents, nor any that contain sand, chloride or acid.

Clean with a soft, clean cloth, lukewarm water and some detergent:

- Door rack
- Shelf
- Dividing shelf*
- VarioSafe*
- Compartment lid for EasyFresh Safe
- Drawer

Clean with a damp cloth:

- Retractable rails
  Please note: The grease in the tracks is used for lubrication and must not be removed!

Wash in the dishwasher up to 60 °C:

- Bottle rack
- Holder of the dividing shelf*
- Ice cube tray*
- FlexCube*

▶ To disassemble components: see the relevant section.
▶ Clean the components.

10.6.4 After cleaning

▶ Wipe the appliance and the components dry.
▶ Connect and switch on the appliance.
▶ Activate SuperFrost (see 8.2 Appliance functions) .
The temperature is cold enough:
▶ Place the food inside.
▶ Repeat cleaning regularly.

11 Customer help

11.1 Technical specifications

Temperature range	
Cooling	2 °C to 9 °C
Freeze	-26 °C to -15 °C

Maximum ice cube quantity / 24 hours	
Freezer compartment	see type plate under “Freezing capacity .../ 24 h”

Maximum component capacity			
Features	Appliance width 550 mm (see installation instructions, appliance dimensions)	Appliance width 600 mm (see installation instructions, appliance dimensions)	Appliance width 700 mm (see installation instructions, appliance dimensions)
Drawer on glass shelf (see 9.5.1 Drawer on appliance base or glass shelf)	12 kg	15 kg	--

Maximum size baking tray	
Width	466 mm
Depth	386 mm
Height	50 mm

Lighting	
Class[1]	Light source
This product contains one or more energy efficiency class F light sources.	LED

[1] *The appliance may contain light sources with different energy efficiency classes. The lowest energy efficiency class is indicated.*

11.2 Operating noise

The appliance makes different noises when it is on.

- At **higher temperatures** the appliance uses less energy but works for longer. It is **quieter**.
- With **high cooling capacity**, food is cooled more quickly. The sound is **louder**.

  Examples:
  - Functions on (see 8.2 Appliance functions)
  - Fan running
  - Food recently added
  - High ambient temperature
  - Door open for a while

Noise	Possible cause	Type of noise
Bubbling and splashing	Coolant flowing into the cooling circuit.	Normal operating noise
Hissing	Coolant sprays into the cooling circuit.	Normal operating noise
Humming	The appliance is cooling. The volume depends on the cooling output.	Normal operating noise
Humming and rustling	The fan is running.	Normal operating noise
Clicking	Components are switched on and off.	Normal switching noise
Rattling or humming	Valves or flaps are working.	Normal switching noise

Noise	Possible cause	Type of noise	Lifting
Vibration	Improper installation	Defective noise	Check the installation. Level the appliance.
Rattling	Components, items inside the appliance	Defective noise	Secure components. Leave enough space between the items.

11.3 Technical fault

Your appliance is designed and built to ensure it works reliably and has a long service life. In the unlikely event that a fault occurs during operation, please check whether it is due to an operating error. If so, you will be charged for the callout and repair costs even if it falls within the warranty period.

You can fix the following faults yourself.

11.3.1 Appliance function

Defect	Cause	Remedy
The appliance is not working.	→ The appliance is not switched on.	▶ Switch the appliance on.
	→ The power plug is not properly plugged into the socket.	▶ Check the power plug.
	→ There is something wrong with the power outlet fuse.	▶ Check the fuse.
	→ Power cut	▶ Keep the appliance closed. ▶ Safeguarding food: Place cold packs on top of food or use another freezer if the power cut lasts longer. ▶ Do not re-freeze defrosted food,

Defect	Cause	Remedy
	→ The IEC socket is not plugged into the appliance correctly.	▶ Check the IEC socket.
Temperature is not cold enough.	→ The appliance door is not closed properly.	▶ Close the appliance door.
	→ Not enough ventilation.	▶ Keep ventilation grille clear, and clean it.
	→ The ambient temperature is too high.	▶ Problem solution: (see 1.8 Climate classes)
	→ The appliance was opened too many times or for too long.	▶ Wait to see if the required temperature corrects itself. If not, contact Customer Service. (see 11.4 Customer Service)
	→ Too much fresh food was placed inside without SuperFrost.	▶ Solution: (see SuperFrost)
	→ The temperature is set incorrectly.	▶ Turn down the temperature and check after 24 hours.
	→ The appliance is too close to a heat source (oven, radiator, etc).	▶ Move the appliance or the heat source.
	→ The appliance was not correctly installed in the recess.	▶ Check if the appliance was installed correctly and that the door closes properly.
The temperature shown on the display is higher than the actual temperature in the appliance.*	→ Appliance door was open for a long time and the door alarm was triggered automatically. This causes the appliance to cool more vigorously.	▶ Close appliance door.
The door seal is defective or needs to be replaced for another reason.	→ The door seal can be replaced. It can be replaced without the need for special tools.	▶ Contact Customer Service. (see 11.4 Customer Service)
The appliance builds up too much ice or condensation.	→ The door seal may have slipped out of its groove.	▶ Check that the door seal is well fitted in the groove.

11.3.2 Features

Defect	Cause	Remedy
The internal light does not come on.	→ The appliance is not switched on.	▶ Switch the appliance on.
	→ The door was open for longer than 15 minutes.	▶ Interior lighting switches off automatically after about 15 minutes when the door is open.
	→ The LED interior light is faulty or the lid is damaged.	▶ Contact Customer Service. (see 11.4 Customer Service)

11.4 Customer Service

First check whether you can rectify the fault yourself (see 11 Customer help) . If you cannot rectify the problem, contact Customer Service.

You can find the address in the enclosed brochure “Liebherr-Service” or at home.liebherr.com/service.

WARNING
Unprofessional repair!
Injuries.
- ▶ Have any repairs and action - not expressly specified - on the appliance and mains cable carried out by service personnel only. (see 10 Maintenance)
- ▶ A damaged mains cable may only be replaced by the manufacturer, the manufacturer’s Customer Service or a similarly qualified person.
- ▶ In the case of appliances with an IEC connector, the change may be made by the customer.

11.4.1 Contacting Customer Service

Make sure that the following appliance information is available:

- ❑ Appliance designation (model and index)
- ❑ Service no. (Service)
- ❑ Serial no. (S no.)

▶ Call up the appliance information via the display. (see Device information)

-or-

▶ Refer to the type plate for appliance information. (see 11.5 Model plate)

▶ Note down the appliance information.
▶ Notify customer service: Report errors and the appliance information.
▷ This will help us to provide you with a faster, more accurate service.
▶ Follow further instructions from Customer Service.

11.5 Model plate

The model plate is behind the drawers on the inside of the appliance.

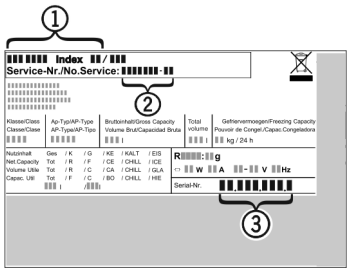

Fig. 206

(1) Appliance description **(3)** Serial no.
(2) Service no.

▶ Note the data on the model plate.

12 Shutting down

▶ Empty the appliance.
▶ Switch off appliance. (see Switching the appliance off and on)
▶ Pull the mains plug out of the socket.
▶ Remove the IEC socket if required: Pull the IEC socket out of the appliance plug and move it to the left and right at the same time.
▶ Clean appliance. (see 10.6 Cleaning the appliance)
▶ Leave the door open, so that no unpleasant odours arise.

13 Disposal

Ensure that the following requirements are met:

- ❑ Meaning of the symbols on the appliance: are familiar.
- ❑ Notes on disposal are familiar. (see 1.6 Information concerning disposal)

13.1 Preparing the appliance for disposal

▶ Shutting your appliance down. (see 12 Shutting down)

13.2 Disposing of the appliance in an environmentally friendly manner

WARNING

Risk of fire due to leaking refrigerant and oil!
The refrigerant inside the appliance is environmentally friendly, but flammable. The oil it contains is also flammable. Escaping refrigerant and oil can ignite in high concentrations and in contact with an external heat source.

▶ Do not damage the refrigerant circuit pipes or the compressor.

▶ Observe the notes on transporting the appliance. (see 3.4 Transporting the appliance)
▶ Remove the appliance without damaging it.
▶ Dispose of appliance according to specifications.

Scan QR Code and find digital operating and installation instructions.

home.liebherr.com

20261005 7088667-00

Liebherr-Hausgeräte GmbH
Memminger Straße 77-79
88416 Ochsenhausen
Deutschland