Operating and installation instructions

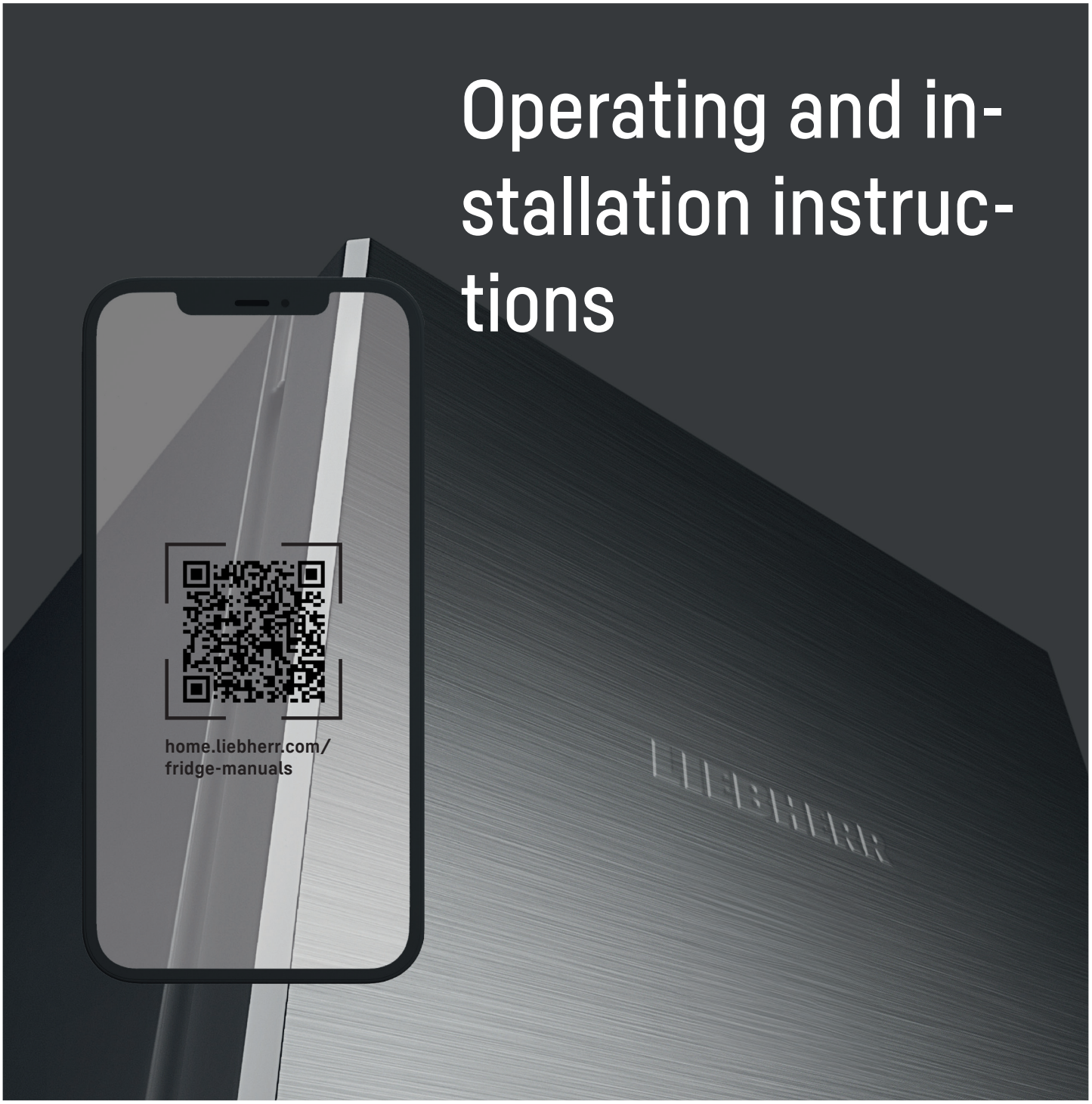

EN ORIGINAL OPERATOR'S MANUAL

LIEBHERR

Contents

1 General safety information ... 3
1.1 Intended use ... 3
1.2 Foreseeable erroneous use ... 3
1.3 User group ... 3
1.4 Warning notices – Risks for the user ... 4
1.5 Faults, damage and repairs ... 4
1.6 Information concerning disposal ... 4
1.7 Conformity ... 4
1.8 Climate classes ... 5
1.9 SVHC substances in accordance with the REACH Regulation ... 5
1.10 EPREL database ... 5
1.11 Open source licences ... 5
1.12 Spare parts ... 5
1.13 Warning levels ... 5

2 Appliance at a glance ... 5
2.1 Scope of delivery ... 5
2.2 Overview of the appliance and equipment ... 5
2.3 SmartDevice ... 6

3 Setting up and connecting ... 6
3.1 Installation requirements ... 6
3.2 Appliance dimensions ... 7
3.3 Recess dimensions ... 7
3.4 Custom panel weights ... 8
3.5 Water connection ... 8
3.6 Transporting the appliance ... 8
3.7 Unpacking the appliance ... 9
3.8 Removing the transport lock ... 9
3.9 Explanation of symbols used ... 9
3.10 Reversing the door ... 10
3.11 Connecting the appliance to the water supply ... 12
3.12 Installing multiple appliances ... 13
3.13 Installing the appliance in the recess ... 13
3.14 Unit fronts ... 20
3.15 After installation ... 21
3.16 Connecting the appliance to the power supply ... 22
3.17 Disposing of packaging ... 22

4 Functionality of the Touch & Swipe display ... 22
4.1 Navigation and symbol explanation ... 22
4.2 Menus ... 23
4.3 Sleep mode ... 23

5 Putting into operation ... 23
5.1 Switching on appliance (first use) ... 23
5.2 Starting the IceMaker for the first time ... 24

6 Storage ... 24
6.1 Information regarding storage ... 24
6.2 Fridge compartment ... 24
6.3 BioFresh ... 25
6.4 Freezer compartment ... 25
6.5 Storage times ... 25

7 Saving energy ... 26

8 Controls ... 27
8.1 Controls and displays ... 27
8.1.1 Status display ... 27
8.1.2 Display symbols ... 27
8.2 Appliance functions ... 27
8.2.1 Notes on the appliance functions ... 27
Switching the appliance off and on ... 27
Switching temperature zone off and on ... 27
Temperature ... 28
BioFresh B-Value ... 28
D-Value ... 28
SuperCool ... 28
VarioTemp ... 29
SuperFrost ... 29
PartyMode ... 30
HolidayMode ... 31
SabbathMode ... 31
EnergySaver ... 32
IceMaker / MaxIce ... 32
IceMaker water supply ... 33
TubeClean ... 34
CleaningMode ... 34
Input lock ... 34
Reminder ... 35
Language ... 35
Temperature unit ... 35
Display brightness ... 36
WiFi ... 36
Device information ... 37
Software ... 37
Start defrosting cycle ... 37
Door alarm ... 38
Demo mode ... 38
Resetting to factory settings ... 39
8.3 Messages ... 39
8.3.1 Overview of warnings ... 39
8.3.2 Ending warnings ... 39
8.3.3 Overview of reminders ... 40
8.3.4 Ending reminders ... 41

9 Features ... 41
9.1 Door rack ... 41
9.2 Shelves ... 43
9.3 Adjustable bottle shelf ... 44
9.4 Drawers ... 45
9.5 Compartment lid for Fruit & Vegetable Safe ... 46
9.6 Glass shelves ... 47

9.7 IceMaker ... 47
9.8 VarioSpace ... 48
9.9 Butter dish ... 48
9.10 Egg rack ... 48
9.11 Bottle holder ... 48
9.12 FlexSystem ... 48
9.13 Flexible ice compartment divider ... 49

10 Maintenance ... 50
10.1 FreshAir carbon filter ... 50
10.2 Dismantling the door rack ... 50
10.3 Assembling the door rack ... 51
10.4 Disassembling / assembling pull-out systems ... 51
10.5 Removing / inserting the variable bottle rack ... 51
10.6 Compartment lid for Fruit & Vegetable Safe ... 52
10.7 Defrosting the appliance ... 52
10.8 Cleaning the appliance ... 53

11 Customer help ... 53
11.1 Technical specifications ... 53
11.2 Operating noise ... 54
11.3 Technical fault ... 54
11.4 Customer Service ... 56
11.5 Model plate ... 56

12 Shutting down ... 56

13 Disposal ... 56
13.1 Preparing the appliance for disposal ... 56
13.2 Disposing of the appliance in an environmentally friendly manner ... 56

The manufacturer is continually working on the further development of all types and models. Please be aware that we reserve the right to make changes to the shape, equipment and technology.

Symbol	Explanation
	Read instructions Please read the information in these instructions carefully to understand all of the benefits of your new appliance.
	Additional information on the Internet The digital manual with additional information and in other languages can be found via the QR code on the front of the manual or by entering the service number at **home.liebherr.com/fridge-manuals**. The service number can be found on the serial tag: 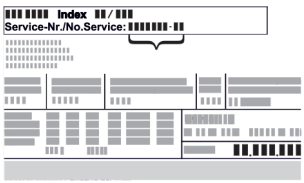 *Fig.* Example illustration
	Check appliance Check all parts for transport damage. If you have any complaints, please contact your agent or customer service.
	Differences These instructions apply to a range of models, so differences are possible. Sections that apply to certain models only are marked with an asterisk (*).

Symbol	Explanation
	Instructions and results Instructions are marked with a ▶. Results are marked with a ▷.
	Videos Videos about the appliances are available on the YouTube channels of Liebherr-Hausgeräte.

Open source licences:

The appliance contains software components that use open source licences. Information on the open source licences used can be found here: **home.liebherr.com/open-source-licences**

This user information applies to the following appliances:

ICBN..i	51...

Note
If your appliance has an N in its appliance designation, it is a NoFrost appliance.

1 General safety information

Keep this user information in a safe place so that you can refer to it at any time.

If you pass on the appliance, pass this user information on to subsequent owners.

To use the appliance properly and safely, read this user information carefully before installation and use. Always follow the instructions, safety instructions and warnings contained therein. They are important so that you can install and operate the appliance safely and properly.

1.1 Intended use

- This appliance is intended for household use and similar applications such as:
  - in staff kitchen areas in shops, offices and other work areas
  - in agriculture and by guests in hotels, motels and other accommodation
  - bed and breakfasts
  - in catering and similar wholesale operations
- Further uses:
  - All other types of application are impermissible.

1.2 Foreseeable erroneous use

The following applications are expressly prohibited:

- Storage and cooling of:
  - Chemically unstable, flammable or corrosive substances
  - Explosive substances, such as aerosol containers with flammable propellant gas
  - Medication, blood plasma, laboratory compounds or similar substances and products subject to the Medical Device Directive 2007/47/EC
- Use in explosive areas

Improper use of the appliance will result in damage or spoilage of the stored foods.

1.3 User group

- This appliance must not be used by persons (including children) with reduced physical, sensory or mental capa-

bilities, or by persons with a lack of experience and knowledge, unless they are supervised by a person responsible for their safety or have been given instructions on how to use the appliance. Children must be supervised to ensure that they do not play with the appliance.
- Children aged between 3 and 8 are allowed to load and unload the fridge-freezer.

1.4 Warning notices – Risks for the user

- WARNING: Keep ventilation openings in the equipment housing or in installations clear of obstructions.
- WARNING: Do not use any mechanical devices or other means to speed up the defrosting process other than those recommended by the manufacturer.
- WARNING: Do not damage the coolant circuit.
- WARNING: Do not operate electrical appliances inside the refrigerator/freezer compartment that are not of the type recommended by the manufacturer.
- WARNING: When installing the appliance, ensure that the mains lead is not trapped or damaged.
- WARNING: Do not place portable multiple sockets or power supply units at the rear of the appliance.

Once the appliance has been installed, it must still be possible to disconnect it from the mains.

- Accessible mains plug (above, below or next to the appliance)
- Tripping of the fuse in the building's electrical installation in accordance with the installation regulations.

WARNING: Fire hazard/flammable substances.

The symbol is located on the compressor and may also appear in other places on the appliance. It marks the danger posed by flammable substances. Do not remove the sticker.

- The more refrigerant there is in the appliance, the larger than room must be in which it is located. In rooms that are too small, a leak can product a flammable gas/air mixture. For every 8 g of refrigerant, the installation room must be at least 1 m^3 in size. Information on the refrigerant contained is given on the type plate inside the appliance.
- Clean regularly surfaces that can come in contact with food and accessible drainage systems.
- Package raw meat or fish in clean, closed containers. This will prevent meat or fish from touching or dripping onto other food.
- If the fridge-freezer is left empty for a long period, switch it off, defrost it, clean it, dry it and leave the door open to prevent mould from forming.
- Avoid prolonged skin contact with cold surfaces or with cold food. Use gloves for protection, for example.
- Alcoholic beverages and other containers bearing alcohol must be sealed tight for storage. Any leaking alcohol may ignite due to electrical parts.
- Only open the door for a short time. This prevents the temperature inside the appliance from rising.
- Do not reach between the door and the appliance when opening and closing. Fingers may become trapped.
- Do not place any items in the front section of the bottom glass shelf to ensure that the appliance door closes properly. (see 6.2 Fridge compartment) (see 9.1 Door rack)
- WARNING: This appliance must be secured in accordance with the instruction manual to prevent any risks arising from a lack of stability.
- Follow the instructions regarding installation, fixing, required dimensions and connections. (see 3 Setting up and connecting)

Appliances with fixed water connection:

- WARNING: Connect only to the drinking water supply.
- Observe the connection values for the water supply. (see 3 Setting up and connecting)
- Only connect the appliance to the drinking water supply using a new set of hoses. Do not reuse old hose sets, dispose of them instead.
  A new set of hoses is supplied with the appliance.
- Rinse the water system if no water has been drawn for more than 5 days.

1.5 Faults, damage and repairs

- Mains connection with cooling appliance plug:
  If the mains lead of this appliance is damaged, it must be replaced with a special connection line available from the manufacturer or its customer service department. The customer may make the change.
- Repairs and interventions on the appliance may only be carried out by the customer service or by other qualified personnel trained for this purpose.
- In the event of malfunctions and appliance faults, pull out the mains plug or switch off the fuse. Always hold the plug when pulling out the mains plug. Never tug on the cable.

1.6 Information concerning disposal

The crossed-out rubbish bin symbol is a note that the appliance must not be disposed of with unsorted household waste and must be placed in a separate collection. It contains recyclable materials and may be reusable.

The symbol may be found on the compressor. It pertains to the oil in the compressor and indicates the following danger: **Can be fatal if swallowed or with penetration of the respiratory tract.** This information is only significant for recycling. No risk exists with normal use.

This or a similar sticker may be on the rear of the appliance. It indicates that there are vacuum insulation panels (VIP) or perlite panels in the door and/or housing. This information is only significant for recycling. Do not remove the sticker.

- The old appliance must be properly and therefore professionally disposed of in accordance with the local applicable regulations and legislation. When transporting the old appliance do not damage the refrigerant circuit, so that the refrigerant inside (information on the type plate) and the oil do not leak out uncontrolled.
- Please note that it is the customer's responsibility to delete any personal data that may be held.
- For Germany: The appliance can be disposed of free of charge via the class 1 collection containers at the local recycling/reusable material centres. When purchasing a new refrigerator/freezer and a sales area > 400 m^2, the old appliance is also taken back free of charge via the trade.
- EU: Please check with your local authorities to find out how to dispose of old appliances.

1.7 Conformity

The coolant circuit has been tested for leak-tightness. When installed, the appliance complies with the relevant safety regulations and directives.

For the EU market:	The appliance complies with Directive 2014/53/EU.
For GB market:	The appliance complies with the Radio Equipment Regulations 2017 SI 2017 No. 1206.

The full text of the EU Declaration of Conformity is available at the following web address: www.liebherr.com

The BioFresh compartment fulfils the requirements of a chiller compartment in accordance with DIN EN 62552:2020.

1.8 Climate classes

Depending on its climate class, the appliance is designed for operation within certain ambient temperature limits. The climate class for your appliance is printed on the type plate.

Note

▶ In order to guarantee fault-free operation comply with the specified ambient temperatures.

Climate class	for ambient temperatures from
SN	10 °C to 32 °C
N	16 °C to 32 °C
ST	16 °C to 38 °C
T	16 °C to 43 °C
SN-ST	10 °C to 38 °C
SN-T	10 °C to 43 °C

1.9 SVHC substances in accordance with the REACH Regulation

- You can use the following link to check whether your appliance contains SVHC substances in accordance with the REACH Regulation: https://go.liebherr.com/z3eewm

1.10 EPREL database

- From 1 March 2021, the information on energy labelling and eco-design requirements will be available in the European product database (EPREL). The product database can be accessed via the following link https://eprel.ec.europa.eu/. Here, you are asked to enter the model identifier. You will find the model identifier on the type plate.

1.11 Open source licences

- The appliance contains software components that use open source licences. Information on the open source licences used can be found here: home.liebherr.com/open-source-licences

1.12 Spare parts

- The spare parts availability for functional parts and stockable parts of the equipment is 15 years.

1.13 Warning levels

⚠ **DANGER**	Identifies an immediately dangerous situation that will result in death or serious bodily injuries if it is not prevented.
⚠ **WARNING**	Identifies a dangerous situation that could result in death or serious bodily injury if it is not prevented.
⚠ **CAUTION**	Identifies an immediately dangerous situation that could result in slight or moderate injuries if it is not prevented.
ATTENTION	Identifies a hazardous situation that could result in property damage if it is not prevented.
Note	Identifies useful information and tips.

2 Appliance at a glance

2.1 Scope of delivery

Check all parts for transport damage. Contact your dealer or customer service in the event of complaints. (see 11.4 Customer Service)

Your new appliance comes with the following parts:

- Built-in appliance
- Features (depending on the model)
- Installation materials (depending on the model)
- “Quick Start Guide”
- “Installation Guide”*
- Service Brochure

2.2 Overview of the appliance and equipment

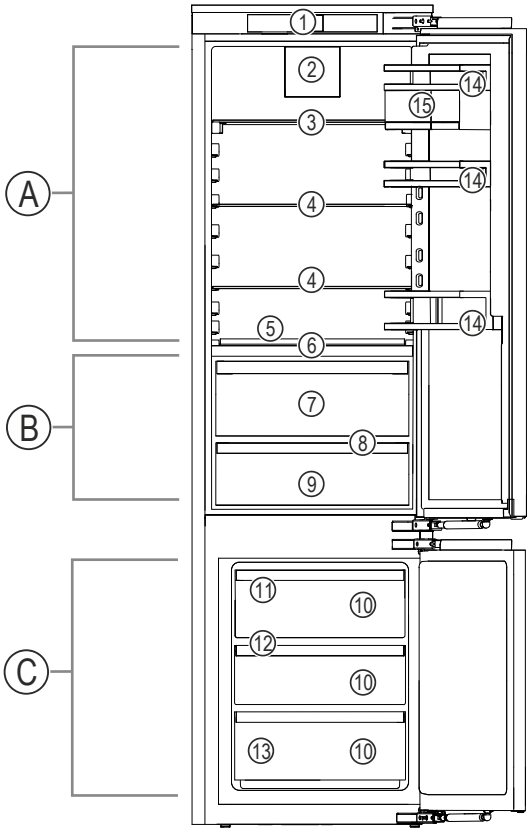

Fig. 1 Example illustration

Temperature range

(A) Fridge section
(B) BioFresh
(B) Coldest area
(C) Freezer section

Equipment

(1) Controls
(2) Fan with FreshAir activated charcoal filter
(3) Divisible shelf
(4) Shelf
(5) Variable bottle rack
(6) Compartment lid for Fruit & Vegetable Safe
(7) Fruit & Vegetable Safe
(8) Drain opening
(9) Meat & Dairy Safe
(10) Freezer drawer
(11) IceMaker
(12) VarioSpace
(13) Type plate
(14) Door rack
(15) VarioBoxes

2.3 SmartDevice

SmartDevice is the networking solution for your fridge-freezer.

If your appliance SmartDevice-enabled or compatible, you can quickly and easily connect your appliance to your WiFi. With the SmartDevice app, you can operate your appliance from a mobile device. Additional functions and setting options are available in the SmartDevice SmartDevice app.

SmartDevice-enabled appliance:	Your appliance is capable of being a SmartDevice. To be able to connect your device to WiFi, you need to download the SmartDevice app.
More information about SmartDevice:	**smartdevice.liebherr.com**
Downloading the SmartDevice app:	After installing and configuring the SmartDevice app, you can connect your appliance to your Wi-Fi (see WiFi) using the SmartDevice app and the appliance's Wi-Fi function.

Note
The SmartDevice function is not available in the following countries: Russia, Belarus, Kazakhstan.

3 Setting up and connecting

3.1 Installation requirements

The installation conditions are crucial to ensure that you can operate your appliance safely, efficiently and without problems.

- Observe all safety instructions.
- Consider the location and position in the room.

WARNING
Danger of fire due to incorrect positioning!
If the mains cable or plug touches the back of the appliance, the vibration can damage the mains cable or the plug resulting in a short circuit.
▶ Make sure the mains cable is not trapped under the appliance when you position the appliance.
▶ Stand the appliance so that it is not touched by connectors or main cables.
▶ Do not connect any appliances to sockets in the area of the back of the appliance.
▶ Do **not** place and operate multi-sockets/power distributors and other electronic devices (such as halogen transformers) at the back of the appliances.

WARNING
Fire hazard due to dampness!
If live parts or the mains lead become damp this may cause short circuits.
▶ The appliance is designed for use in enclosed areas. Do not operate the appliance outdoors or in areas where it is exposed to splash water or damp conditions.

WARNING
Risk of fire due to leaking refrigerant and oil!
The refrigerant inside the appliance is environmentally friendly, but flammable. The oil it contains is also flammable. Escaping refrigerant and oil can ignite in high concentrations and in contact with an external heat source.
▶ Do not damage the refrigerant circuit pipes or the compressor.

3.1.1 Installation site

- Only set up and use the appliance in enclosed spaces.
- Only operate the appliance when it is installed.
- If the appliance is installed in a very damp environment, condensation may form on the appliance exterior. Always make sure there is good ventilation and aeration at the installation site.
- The more refrigerant there is in the appliance, the larger than room must be in which it is located. In rooms that are too small, a leak can product a flammable gas/air mixture. For every 8 g of refrigerant, the installation room must be at least 1 m^3 in size. Information on the refrigerant contained is given on the type plate inside the appliance.
- The floor on which the appliance stands must be horizontal and level.

3.1.2 Position in space

- Do not install the appliance in direct sunlight or near radiators or similar sources of heat.
- You can install the appliance directly next to an oven.
- If the appliance is installed directly next to an oven, the energy consumption may increase slightly. This is dependent on the service life and usage intensity of the oven.
- Only fit the appliance into solid units.
- Use in hazardous areas is not permitted.

3.2 Appliance dimensions

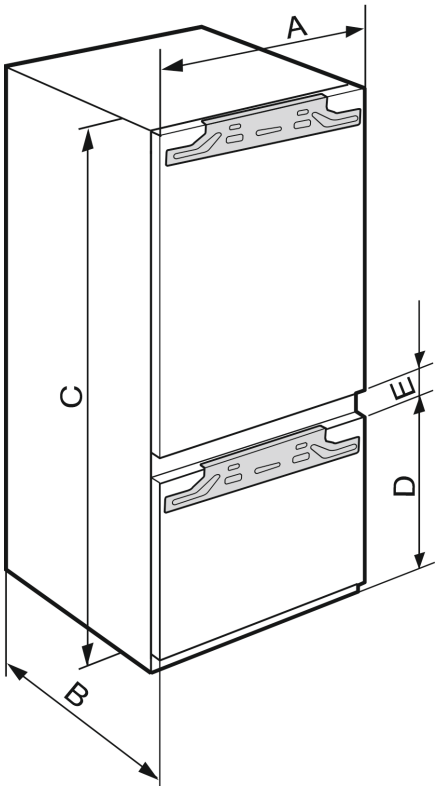

Fig. 2

ICB..(i) 51..	
A (mm)	559
B (mm)	546
C (mm)	1770
D (mm)	549
E (mm)	15

Niche height 1780 - combinations with 2 freezer compartments

IC(B)(N)..(i) 51.. / ICBNbsci 5173 / IKG 51Ve03 / IKGN 51Vc03 / IKGBN 51VD23i / ICNbsci 5173 / SICN..i 51.. / IKGN 51Ve03 / IKGNc 1783 / IC(B)Ndx 5173	
A (mm)	559
B (mm)	546
C (mm)	1770
D (mm)	695
E (mm)	15

Niche height 1780 - combinations with 3 freezer compartments

3.3 Recess dimensions

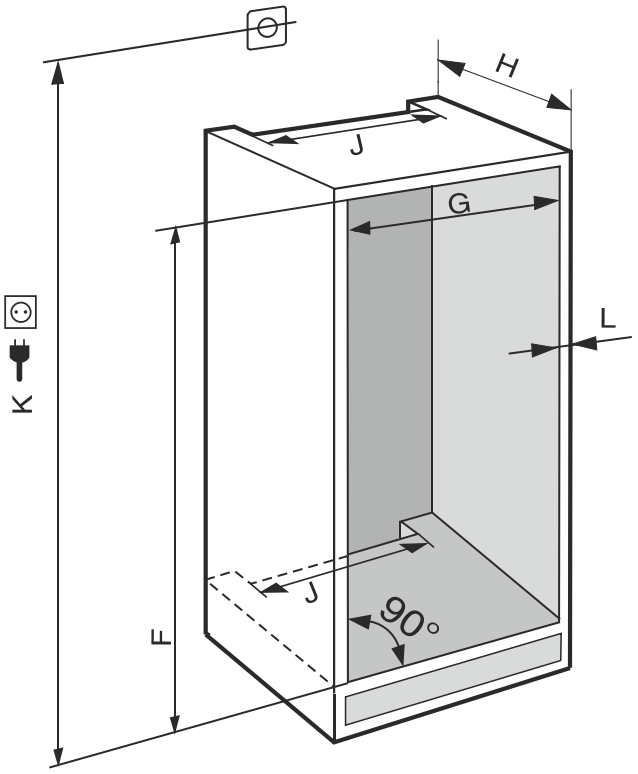

Fig. 3 ***(K):*** *max. 2100 mm*

Observe the following information for devices with a fixed water connection:

- Water connection (see 3.5 Water connection)
- Connecting the device to the water supply (see 3.11 Connecting the appliance to the water supply)

IC(B)(N)..(i) 51.. / ICBNbsci 5173 / IKG 51Ve03 / IKGN 51Vc03 / ICNbsci 5173 / IKGN 51Ve03 / IKGBN 51Vd23i / IR(B)(P)..(i) 51.. / IRD..i 51.. / IRBbsci 5170 / IRBbsci 5171 / IRBPbsci 5170 / IKB 51Vc50i / IKB 51Vc51i / IK 51Vd00 / IK 51Ve00 / IK 51Ve01 / IK(B).. 1780 / IK(B).. 1784 / IKGNc 1783 / SICN..i 51.. / SIFN..(i) 51.. / SIFNbsdi 51.. / SIGN 51Vd28 / IC(B)Ndx 5173	
F (mm)	1772 to 1788
G (mm)	560 to 570
H (mm)	min. 550, recommended 560
J (mm)	min. 500
L (mm)	max. 19

The specified energy consumption was determined with a kitchen unit depth of 560 mm. The appliance will work properly at a kitchen unit depth of 550 mm, but with a slightly higher energy consumption.

▶ Check the wall thickness of adjacent cabinets: They must have a minimum of 16 mm .

▶ Only fit the appliance into stable, solid kitchen units. Secure the unit against tipping.

▶ Align the cabinets with a spirit level and a try square. If necessary, level them by putting something underneath them.

▶ Make sure floor and the side panels of the cabinet are at right angles to each other.

3.3.1 Ventilation requirements

NOTICE
Covered vents!
Damage. Appliance can overheat, which can reduce the service life of various parts of the appliance and lead to operational impairments.
▶ Always make sure there is good ventilation.
▶ Always keep vents or ventilation grids in the appliance housing and in the kitchen furniture (fully integrated appliance) unobstructed.
▶ Always keep the fan air vents unobstructed.

Always follow the required ventilation gaps:
- The depth of the ventilation shaft at the back of the cabinet must be at least 38 mm.
- At least 200 cm^2 is required for the ventilation gap cross sections in the plinth and the housing cabinet.
- As a rule, the larger the ventilation cross-section, the more efficiently the appliance will run.

Sufficient ventilation is required for the operation of the appliance. The ventilation grids provided ensure an effective ventilation cross-section on the appliance of 200 cm^2. If you replace the ventilation grids with a cover plate the ventilation cross-section must be as least as large as the ventilation grid provided by the manufacturer.

3.4 Custom panel weights

NOTICE
An excessively heavy custom panel can potentially cause damage!
If the custom panel is too heavy, damage to the hinges cannot be ruled out, which may compromise the functionality of the unit.
▶ Before fitting the custom panel, ensure the custom panel does not exceed the permissible weight.

Niche height (mm)	Maximum weight of custom panel (kg)	
	Fridge compartment door	Freezer compartment door
1780	18	12

Customising combinations

3.5 Water connection

If your appliance has a fixed water connection, a hose is supplied with it.

Note
You can purchase a hose of a different length as an accessory.

Overview of dimensions for the water connection:	(see 3.5 Water connection)
Requirements for the water pressure:	(see 3.5 Water connection)
Make the water connection:	(see 3.11 Connecting the appliance to the water supply)

3.5.1 Dimensions for the water connection

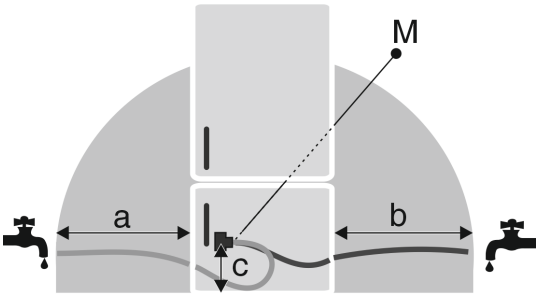

Fig. 4
(a) Maximum available hose length
(b) Maximum available hose length
(c) Distance of solenoid valve to floor
(M) Solenoid valve

a	b	c
~ 1200 mm	~ 1200 mm	~ 55 mm

3.5.2 Water pressure

The water connection line and solenoid valve of the appliance are suitable for a water pressure of up to 1 MPa (10 bar).

To ensure that the appliance functions correctly (flow rate, ice cube size, noise level), maintain the following water pressure:

Water pressure:	
bar	MPa
1.5 to 6.2	0.15 to 0.62

If the pressure is higher than 6.2 bar:
▶ Fit a pressure reducer.
▶ Make the water connection. (see 3.11 Connecting the appliance to the water supply)

3.6 Transporting the appliance

3.6.1 Transporting the appliance for initial use

Ensure that the following requirements are met:
❑ The appliance is packaged.
❑ The appliance is upright.

▶ Transport the appliance with the help of two people.
▶ Unpacking the appliance. (see 3.7 Unpacking the appliance)

3.6.2 Transporting the appliance after initial use

Observe the following instructions if you wish to transport or move the appliance again after initial use.

Ensure that the following requirements are met:
❑ The appliance is emptied.
❑ The appliance is upright.
❑ Appliance with door(s): Door is secured against accidental opening.
❑ Appliance with telescopic unit: The telescopic unit is secured against accidental opening.
❑ Appliance is removed.

▶ Transport the appliance with the help of two people.

3.7 Unpacking the appliance

NOTICE
Risk of damage if the unit is moved!
If you move the unit across the floor without any protection, it may damage the floor.
▶ Make sure you cover the floor properly before removing the packaging from the unit.

▶ Check the appliance and packaging: If you suspect that the goods have been damaged in transit, please contact the supplier before connecting them.

NOTICE
Damage to property caused by pointed or sharp objects!
Using pointed or sharp objects when removing packaging material may damage the appliance.
▶ Do not use any pointed or sharp objects to remove the packaging material.

▶ Remove the packaging materials.

3.8 Removing the transport lock

▶ Remove the transport lock from the appliance door.

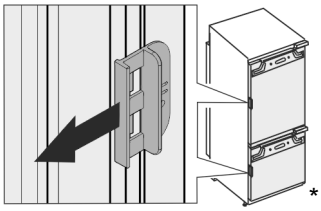

3.9 Explanation of symbols used

	There is a danger of injury during this step! Observe the safety instructions!
	The instruction is valid for several models. Only perform this step if it applies to your appliance.
	For installation, please refer to the detailed description in the text section of the instructions.
	Section is valid for either a single-door appliance or a double-door appliance.
	Choose between the following options: Appliance with door hinge on the right or appliance with door hinge on the left.
	Installation step required for IceMaker and/or InfinitySpring.
	Only loosen or lightly tighten the screws.
	firmly tighten the screws.
	Check whether the following step is necessary for your model.
	Check that the components used are correctly installed/fitted.
	Measure the specified dimension and correct if necessary.
	Tool for installation: Metre stick
	Tool for installation: Cordless screwdriver and use A lengthwise bit insert is recommended for good access to the screws.
	Tool for installation: Spirit level
	Tool for installation: Open-end wrench with AF 7 and AF 10
	Two people are required for this step.
	The step takes place at the marked location on the appliance.
	Aid for installation: String
	Aid for installation: Protractor
	Aid for installation: Screwdriver

	Aid for installation: Scissors
	Aid for installation: Marking pen, wipeable
	Included: Remove components
	Dispose of components that are no longer required in accordance with local regulations.

3.10 Reversing the door

Tool

Fig. 5

NOTICE
Live parts!
Damage to electrical components.
▶ Remove the mains plug before you reverse the door.

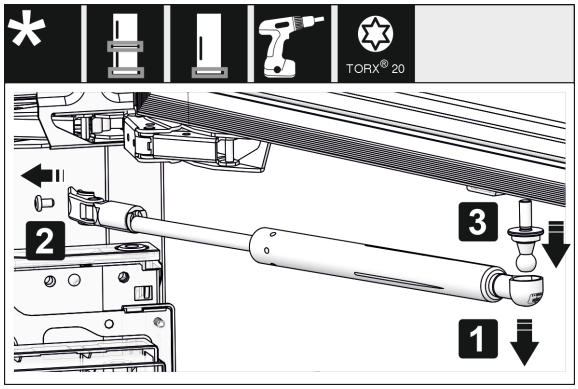

Fig. 6
▶ Removing the soft stop damper: Remove the soft stop damper from the ball stud (1). Unscrew the retainer (2). Remove the ball stud with a screwdriver (3).

Note
If the closing damper is only slightly above the floor, you can only remove the ball pins when the door is removed.

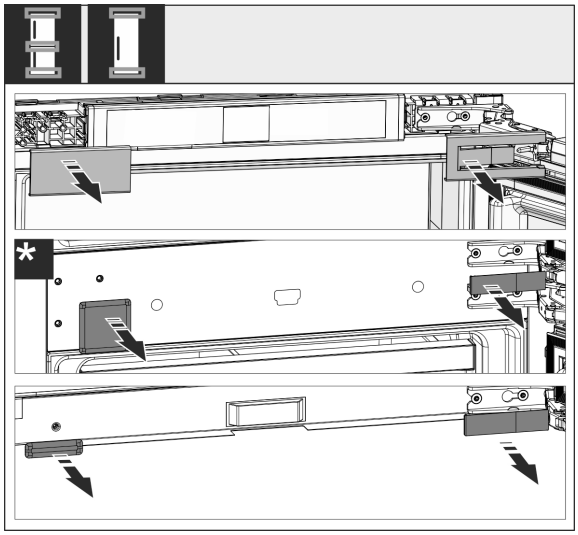

Fig. 7
▶ Remove covers.

Note
When removing the covers, ensure that the surface does not get scratched.

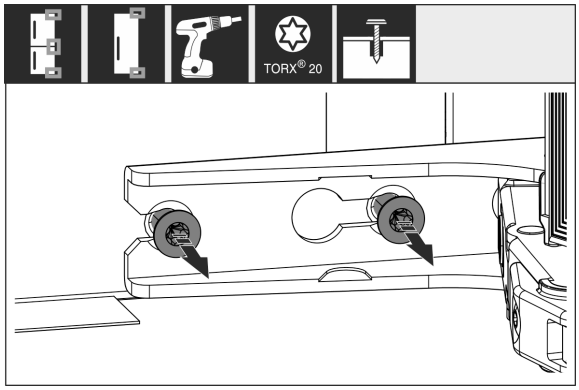

Fig. 8
▶ Loosen the screws on **all** hinges but do not remove them.

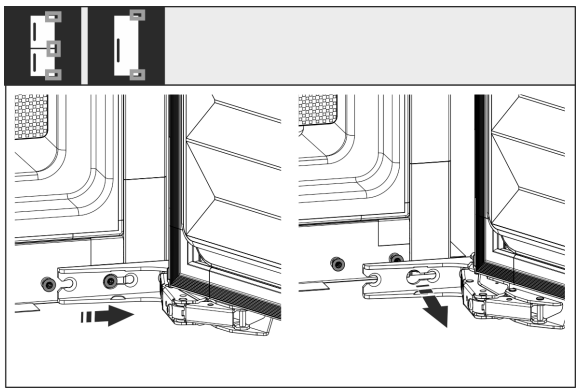

*Fig. 9 **
▶ Removing the door: Push the door forward and then out, unhang it and put it to one side.

*** Depending on model and options**

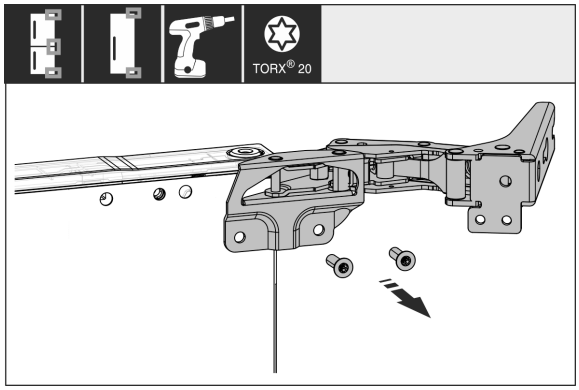

Fig. 10

▶ Unscrew all hinges and set aside together with the screws.

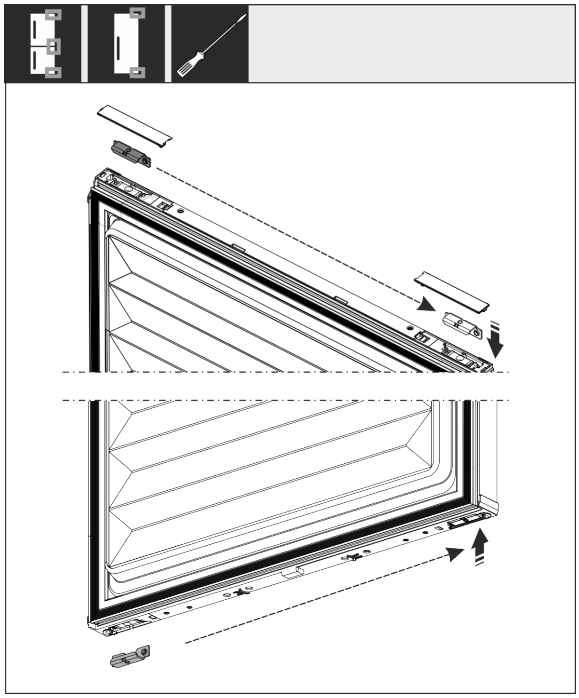

Fig. 11

▶ Loosen and shift the bracket at the top and bottom of the door. The bracket must be shifted so you can screw on the hinges.

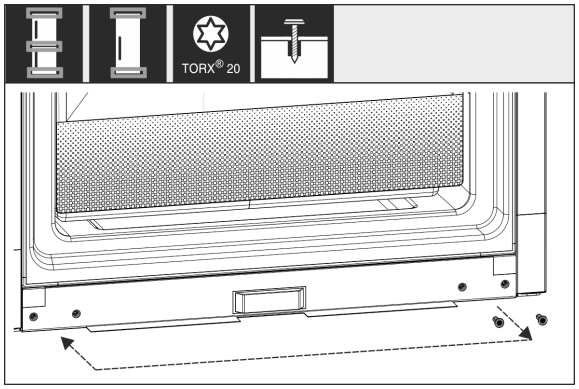

Fig. 12

▶ Shift the screws to fasten the hinge. Do not screw tightly after shifting – you need to hang the hinges later.

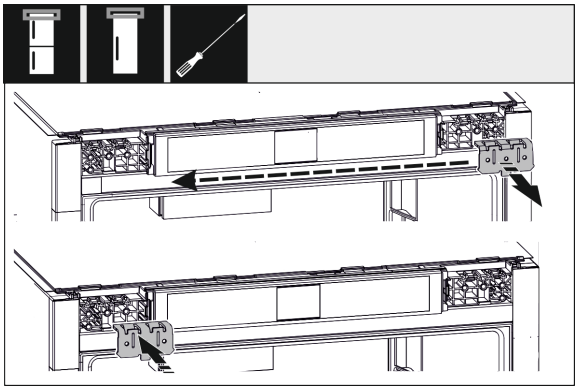

Fig. 13

▶ Move the fixing bracket to the opposite side.

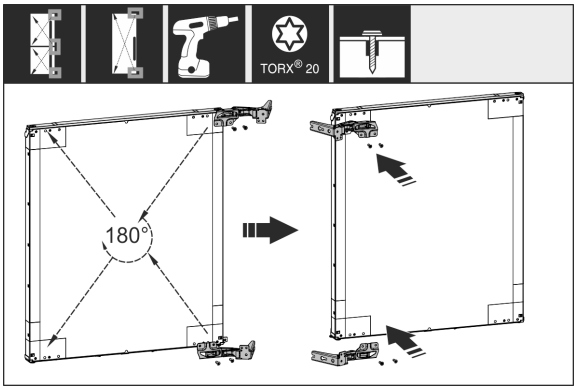

Fig. 14

▶ Turn all hinges 180° to the opposite side and screw firmly.

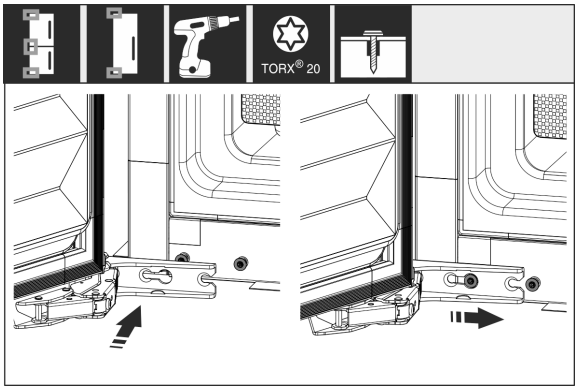

*Fig. 15 **

▶ Refitting the door: Hang the door with its hinges and tighten the screws.

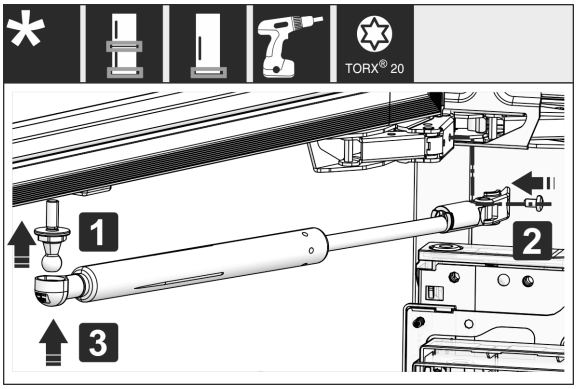

Fig. 16

▶ Refitting the closing dampers: Screw in the ball studs (1), tighten the bracket (2) and hang the closing dampers in the ball studs.

▶ Check all screws and retighten if necessary.

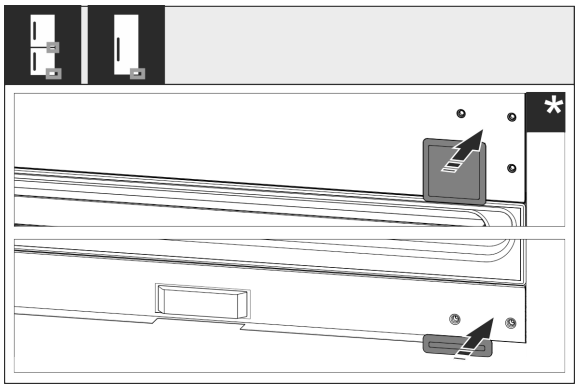

Fig. 17

▶ Reassemble the bottom and centre cover. Only replace the remaining covers after installing the appliance back into the cabinet.

3.11 Connecting the appliance to the water supply

Make sure that the following requirements are fulfilled:

- ❑ The dimensions for the water supply connection are known and complied with. (see 3.5.1 Dimensions for the water connection)
- ❑ The correct water pressure is maintained. (see 3.5.1 Dimensions for the water connection)
- ❑ Water is supplied to the appliance via a cold water pipe which can withstand the operating pressure and is connected to the drinking water supply.
- ❑ All equipment and devices used to supply water must comply with the regulations in force in the respective country.
- ❑ The rear of appliance is accessible so that you can connect the appliance to the drinking water supply.
- ❑ The supplied hose is used. Old hoses have been disposed of.
- ❑ The hose connector contains a filter with a seal.
- ❑ There is a tap between the hose line and the domestic water connection so that you can turn off the water supply if necessary.
- ❑ The tap is not directly behind the appliance and is easily accessible. This way, you can push the appliance as far as possible into the cabinet recess and can quickly turn off the tap if necessary.

WARNING

Risk of electric shock from water!

▶ Before connecting to the water pipe: Disconnect the appliance from the mains.

▶ Before connecting to water supply lines: Shut off the water supply.

▶ Make sure that only qualified personnel connect the device to the drinking water supply.

WARNING

Risk of poisoning due to contaminated water!

▶ Only connect to the drinking water supply.

3.11.1 Connecting the hose

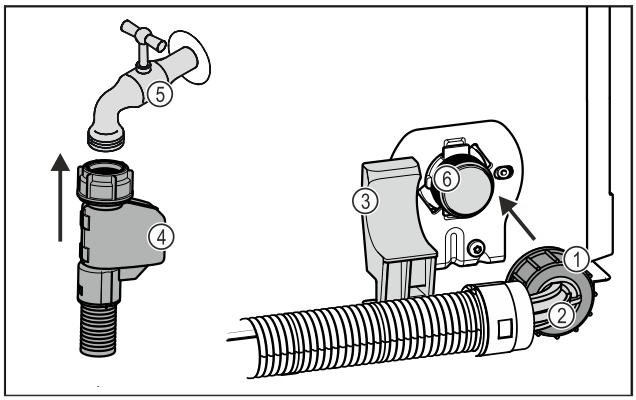

Fig. 18

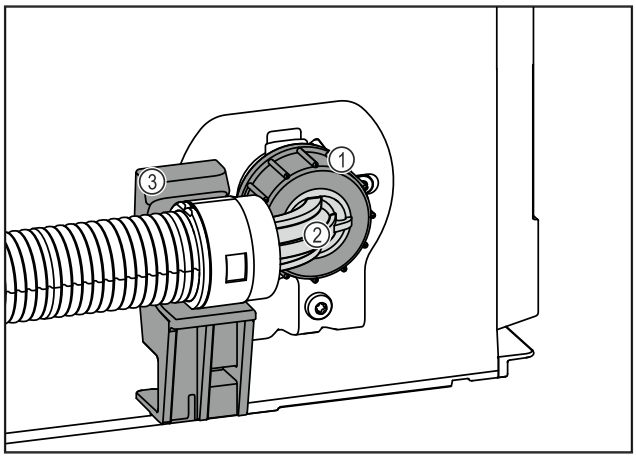

Fig. 18

(1) Nut
(2) Angled hose end
(3) Bracket
(4) Straight hose end
(5) Tap
(6) Solenoid valve: The solenoid valve is at the bottom on the back of the appliance. It has an R3/4 connecting thread.

NOTICE

Risk of damage from incorrect installation!

▶ Do not damage or kink the hose.

▶ Do not damage or kink the hose during installation in the cabinet recess.

Connecting the hose to the appliance:

▶ Position and hold the angled hose end *Fig. 18 (2)* horizontally on the bracket *Fig. 18 (3)*.

▶ Screw on the nut *Fig. 18 (1)* on by hand until it is firmly in place.

▷ The hose is connected to the appliance.

Connecting the hose to the tap:

▶ Connect the straight hose end *Fig. 18 (4)* to the tap *Fig. 18 (5)*.

▷ The hose is connected to the tap.

3.11.2 Checking the water system

Before you completely install the appliance in the cabinet recess, Liebherr recommends checking the water system for leaks.

▶ Slowly turn on the tap.

▶ Check the hose, water feed and connections for leaks.

▷ The water system has now been checked for leaks.

▷ The water system is not leaking: You can install the appliance completely in the cabinet recess.

Note
IceMaker: Before the first use, you must clean the IceMaker. (see Quick Start Guide or operating instructions)

3.12 Installing multiple appliances

The appliances have been developed for different installation methods. If you wish to install several appliances next to each other or on top of each other, ensure that the following requirements are met:

- ❑ Only install appliances next to or on top of each other if they have been developed for this.
- ❑ Observe notices and the following table.

NOTICE
Risk of damage due to condensate!
▶ Do not place the appliance directly next to another cooling/refrigeration unit.

NOTICE
Risk of damage due to condensation!
▶ Do not place the appliance directly on top of another cooling/refrigeration unit.

Model	Installation method
All models	Standalone
Models with a model designation starting with **S....**	Side-by-Side (SBS)
Models up to a maximum niche height of 880 mm and with a heated ceiling can be installed “on top of each other”. Top appliance: up to a maximum niche height of 140 mm	On top of each other

Models and their installation method

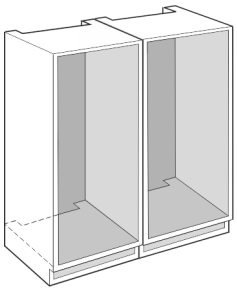

Fig. 19

Install each appliance into a separate unit niche.

3.13 Installing the appliance in the recess

Tool

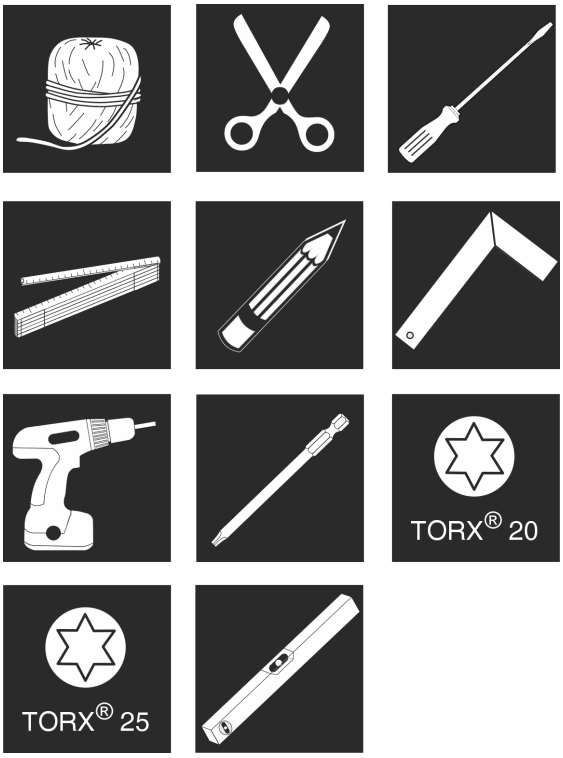

Fig. 20

Supplied assembly parts

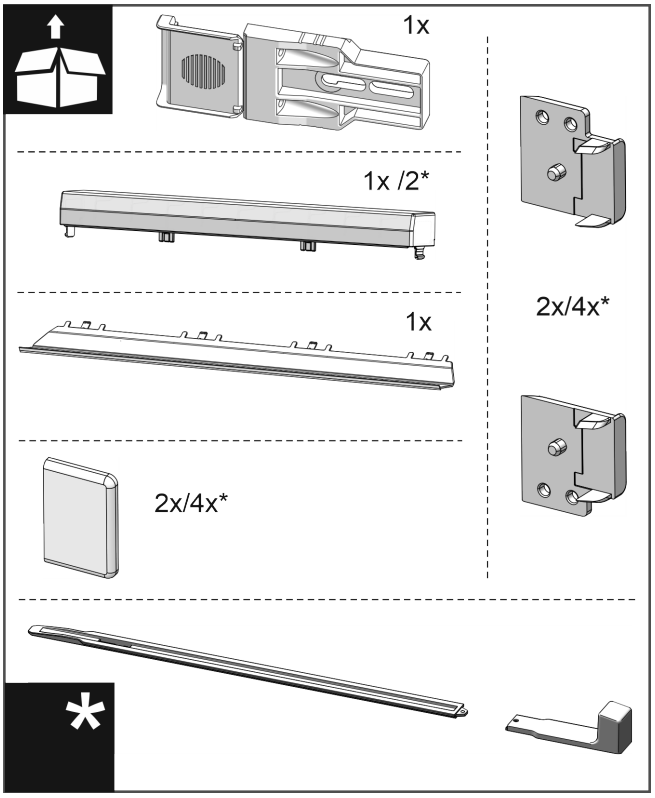

Fig. 21

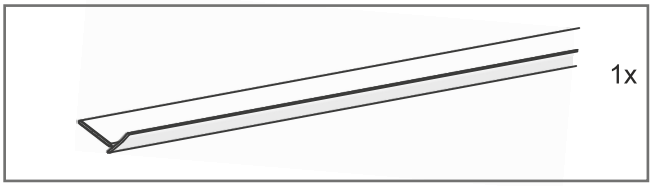

Fig. 22

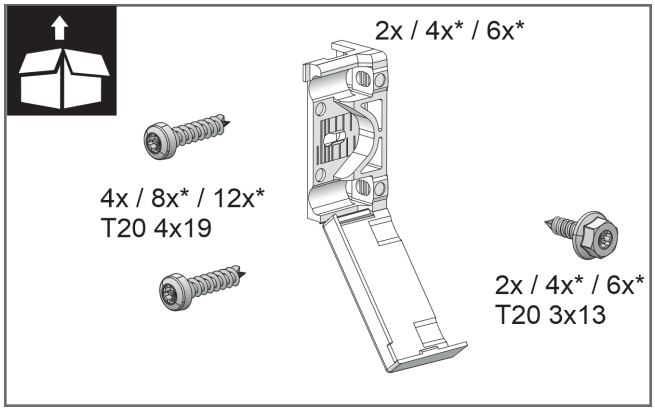

Fig. 23

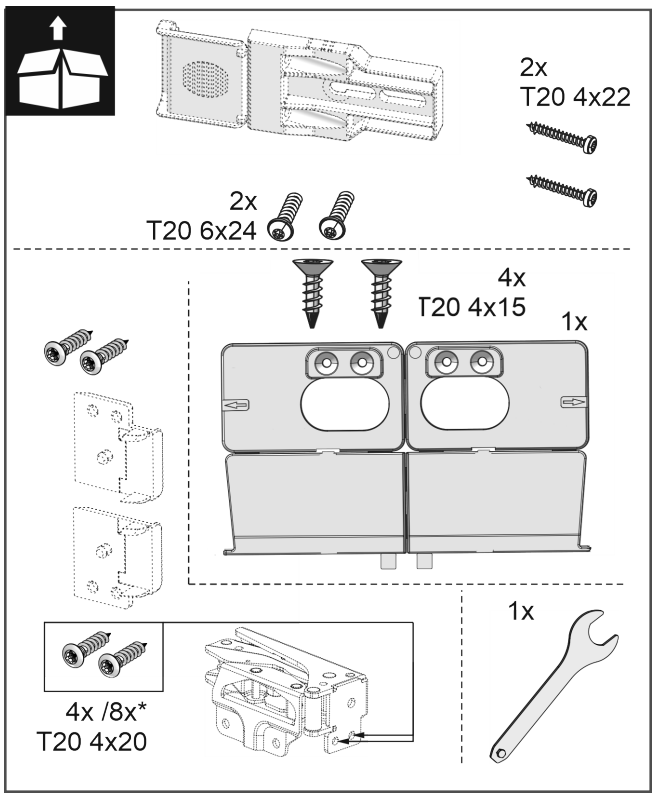

Fig. 24

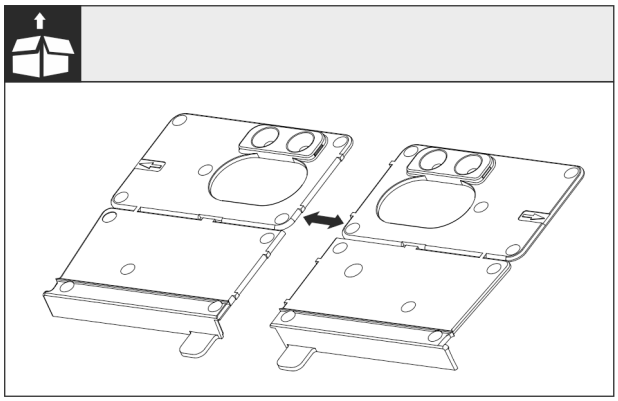

Fig. 25

▶ Disconnect the base installation bracket at the perforation.

NOTICE

Correct installation depth of the appliance.

▶ Using the mounting bracket ensures the correct installation depth of the appliance.

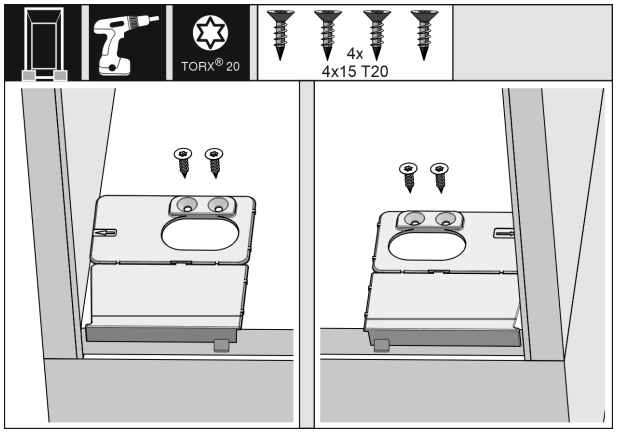

Fig. 26

▶ Screw the mounting brackets on the left and right of the recess floor, flush to the side wall.

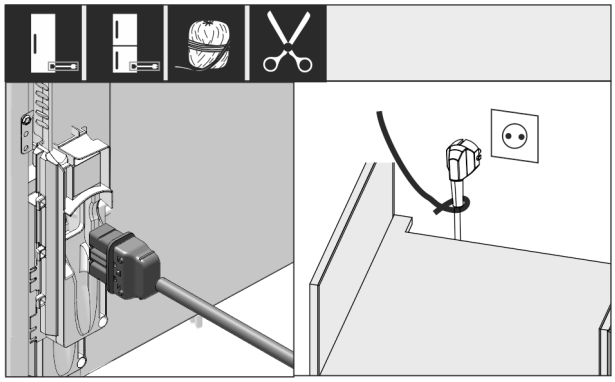

Fig. 27

▶ Remove the mains cable from the package.

▶ Plug the mains cable's IEC socket completely into the appliance plug on the back of the appliance. Ensure that the IEC socket is tight.

▶ Use a cord to lay the mains plug to a freely accessible socket.

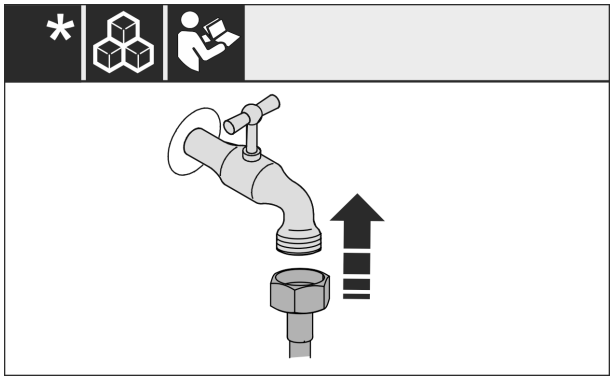

Fig. 28

▶ If necessary, install the water connection at this point, following the instructions in the User Guide.

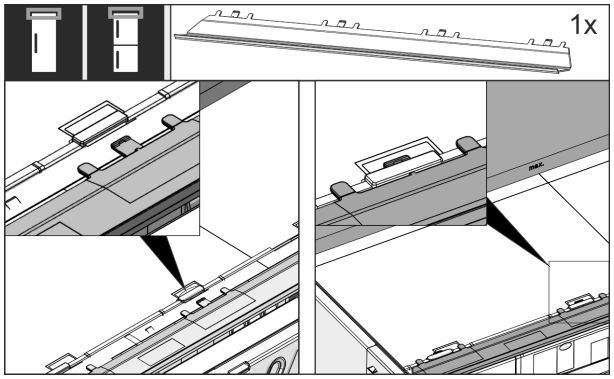

Fig. 29

▶ Insert the adapter panel on the top of the appliance. The panel can be moved to both sides.

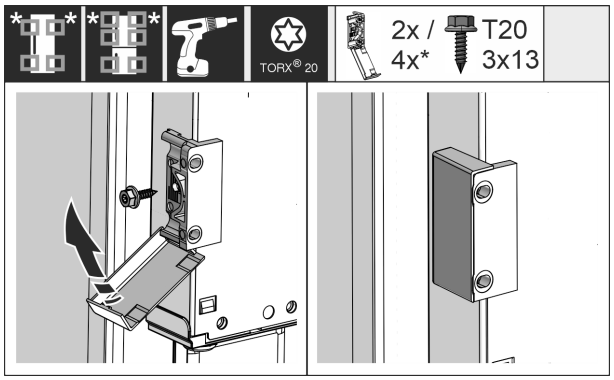

Fig. 30

▶ Fit the mounting bracket. Attach the mounting bracket at the height of the custom door panel handle. For a large door, use four mounting brackets.

▶ After assembly, fold the covers onto the bracket.

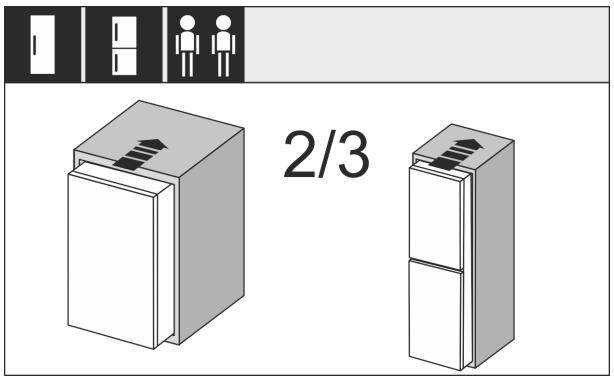

Fig. 31

▶ Insert the appliance 2/3 of the way into the recess.

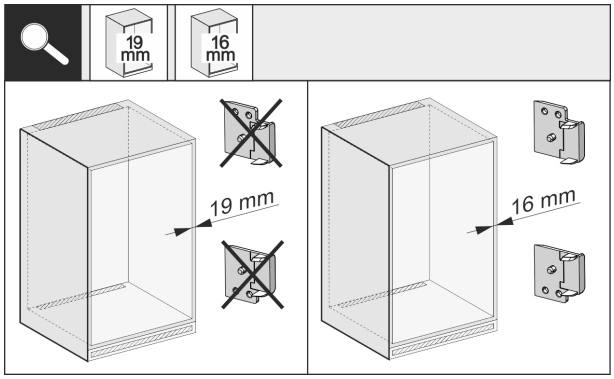

Fig. 32

▶ Check whether the unit side wall is 16 mm or 19 mm thick.

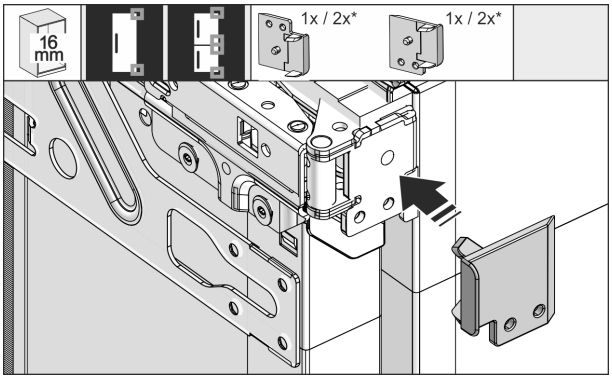

Fig. 33

▶ 16 mm thick unit side walls: Put a spacer on all hinges.

▶ 19 mm thick unit side walls: You do not need a spacer.

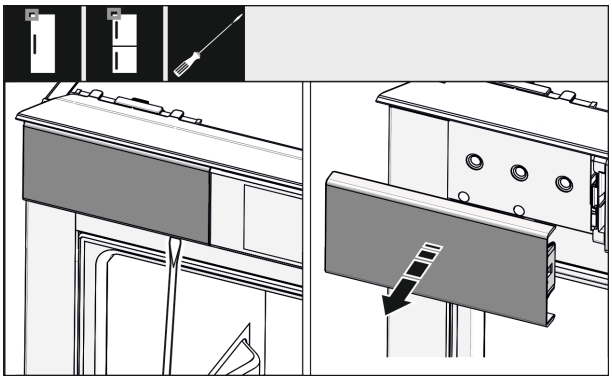

Fig. 34

▶ Use a screwdriver to loosen the cover at the top left and remove it.

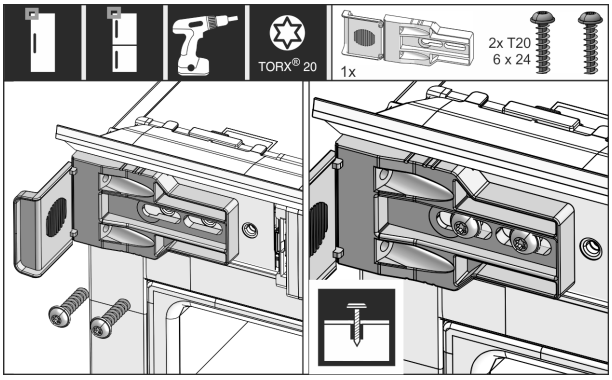

Fig. 35

▶ Loosely tighten the mounting bracket screw. The bracket should still be easy to move.

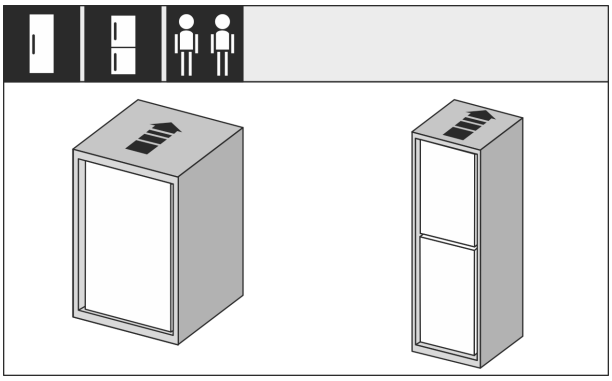

Fig. 36

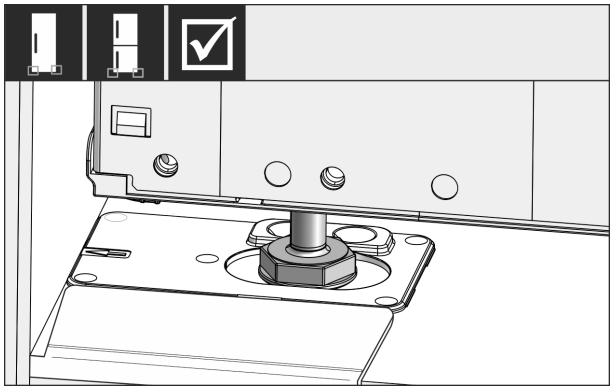

Fig. 37

WARNING

Risk of fire due to short circuit!

- ▶ When you push the appliance into the niche: do not kink, jam or damage the mains cable.
- ▶ The appliance must not be operated with a defective mains cable.

- ▶ Push the appliance all the way into the unit recess. The adjustable feet must rest in the recesses in the brackets on both sides.

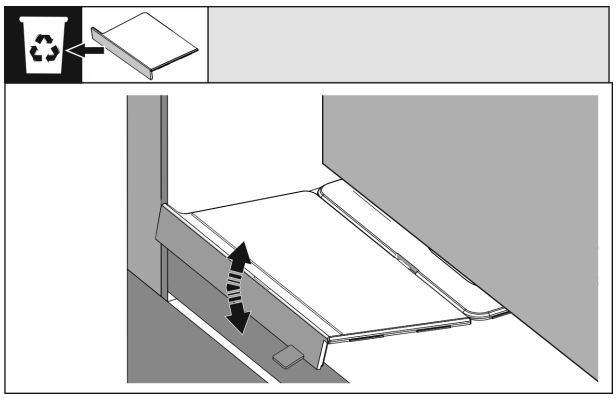

Fig. 38

- ▶ Remove the floor mounting bracket stopper. Loosen the stopper by moving it and, if necessary, pull it off using pliers.

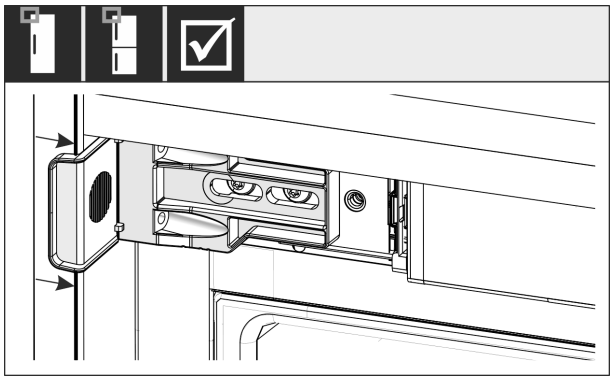

Fig. 39

- ▶ Check that the appliance is flush in the cabinet recess. The mounting bracket must be attached to the side wall of the cabinet recess.

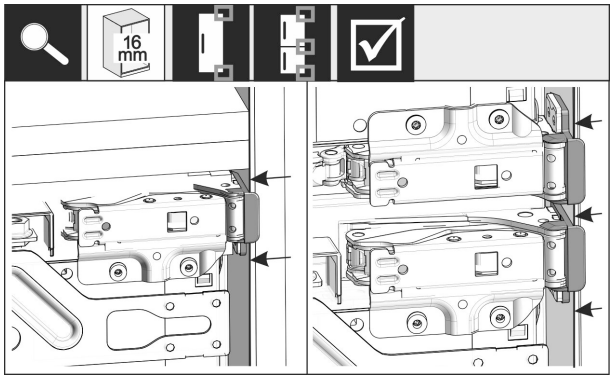

Fig. 40

Note

With 16 mm unit side walls, the spacers fit against the unit recess on the hinge side.

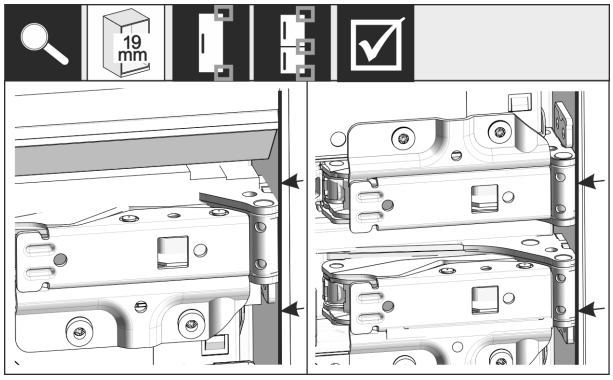

Fig. 41

- ▶ 19 mm thick unit side walls: Align the front of the hinges flush with the unit side wall.

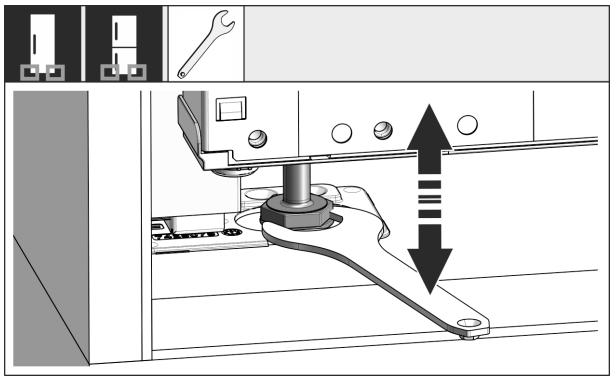

Fig. 42

- ▶ If necessary, use the adjustable feet to correct the tilt of the appliance.

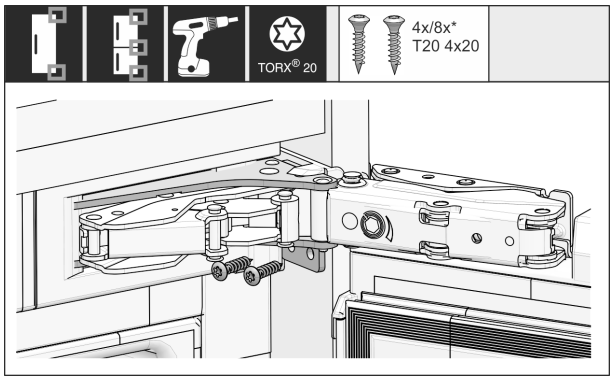

Fig. 43

- ▶ Screw on the appliance on the hinge side.

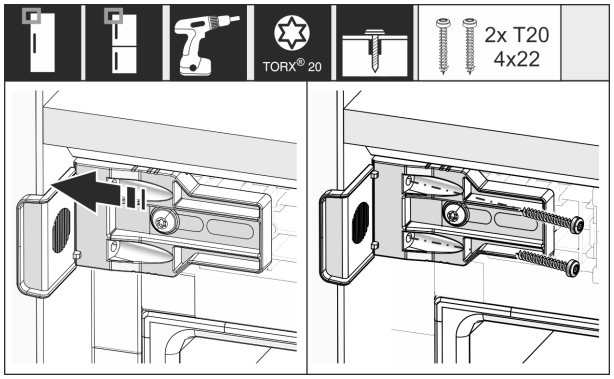

Fig. 44

▶ Move the bracket so it sits flush on the side wall of the cabinet recess.
▶ Tighten all the screws securely.

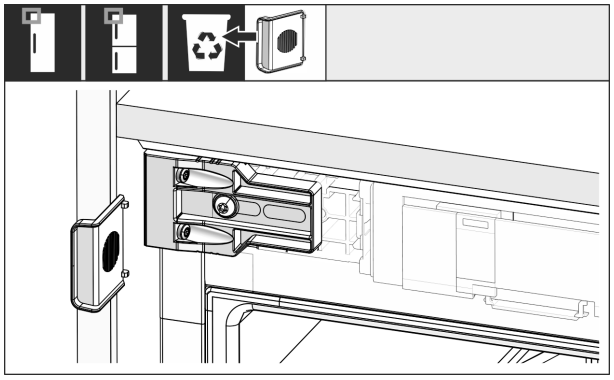

Fig. 45

▶ Remove the stop from the bracket on the handle side and dispose of it.

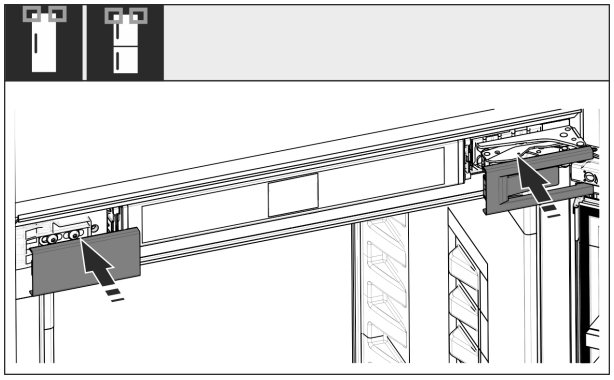

Fig. 46

▶ Put covers into position.

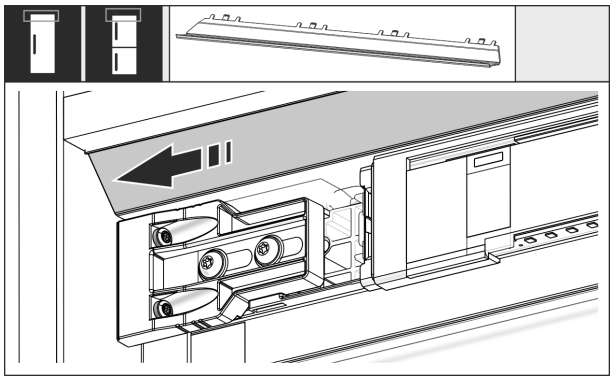

Fig. 47

▶ Slide the panel so that it sits flush with the side of the cabinet wall.

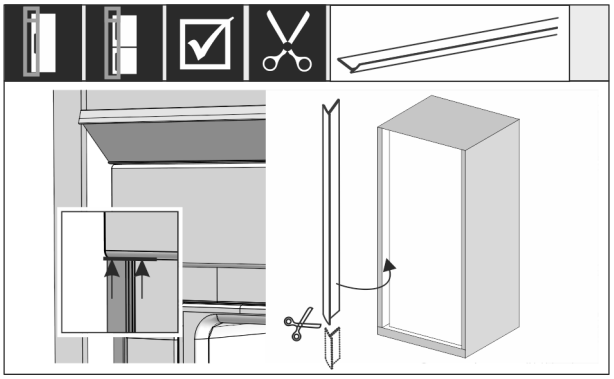

Fig. 48

▶ If necessary: Shorten the sealing strip as necessary with a sharp pair of scissors.
▶ Position the sealing strip below the top cover and press it in. The sealing strip is magnetic.

From a niche height of 1400 mm, install levelling rails:

Fig. 49

You must installed levelling rails under the appliance from a niche height of 1400 mm. The levelling rails **reduce the noise level**. Two levelling rails and an installation handle are enclosed as standard from a niche height of 1400 mm.

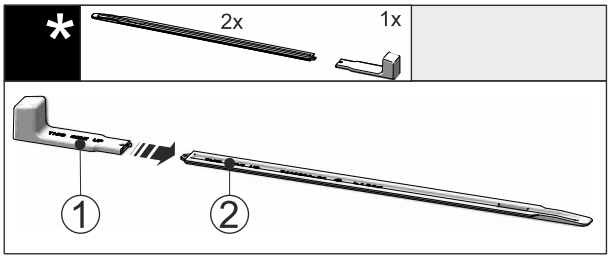

Fig. 50

▶ Attach the installation handle *Fig. 50 (1)* to the levelling rail *Fig. 50 (2)*.

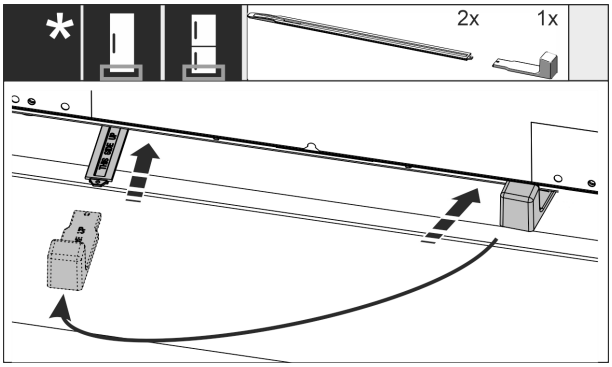

Fig. 51

▶ Push the levelling rail into the guide under the appliance base until it reaches the stop.
▶ Remove the installation handle and attach it to the second levelling rail.

▶ Proceed in the same way for the second levelling rail.

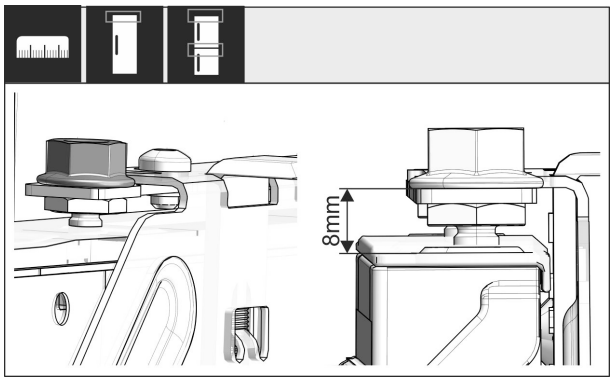

Fig. 52

▶ Close the door.

▶ Check the preset of 8 mm from the upper edge of the appliance door to the crosspiece support.

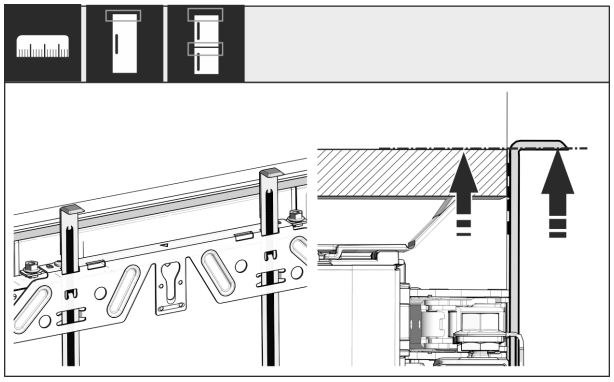

Fig. 53

▶ Push the assembly aids to the unit door height. Lower stop edge of the assembly aid = upper edge of the door to be assembled.

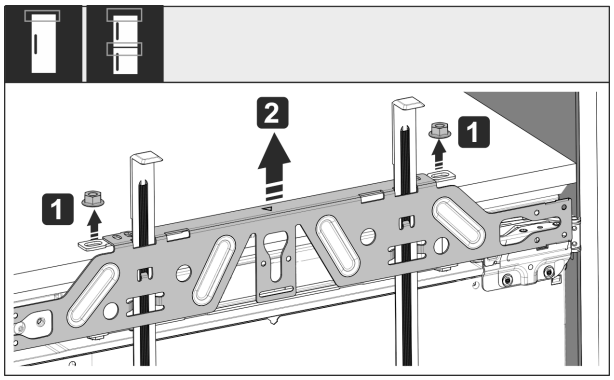

Fig. 54

▶ Loosen locknuts *Fig. 54 (1)*.

▶ Remove crosspiece *Fig. 54 (2)*.

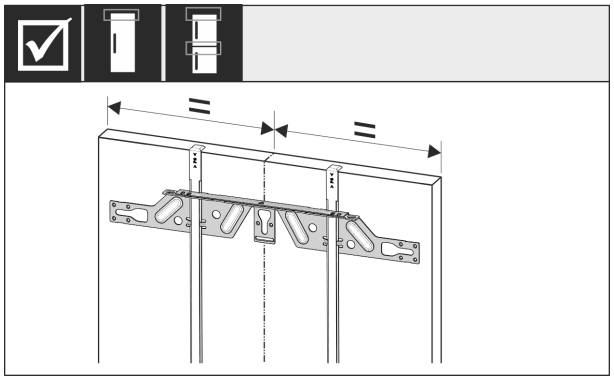

Fig. 55

▶ Hang the crosspiece on the inside of the unit door and make sure it is central.

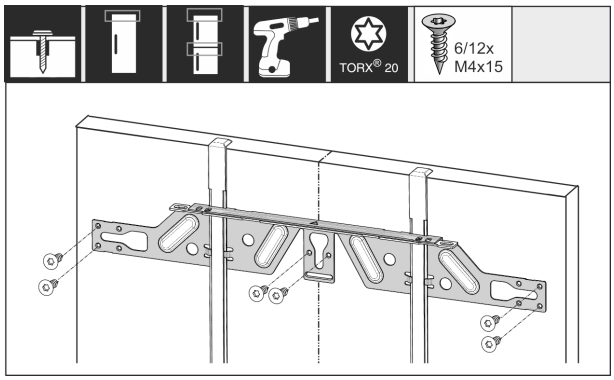

Fig. 56

▶ Fix the crosspiece using at least 6 screws for chipboard doors and at least 4 screws for panel doors.

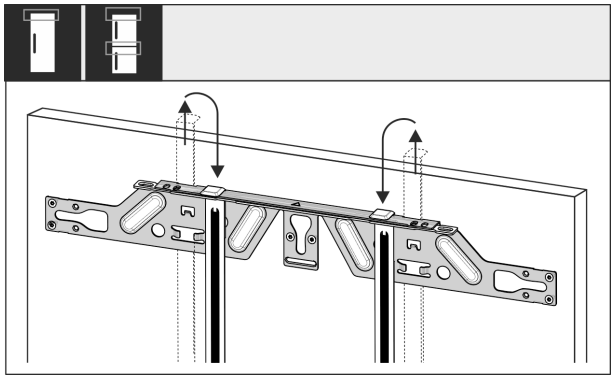

Fig. 57

▶ Remove the fitting aids, turn round and insert into the adjacent opening.

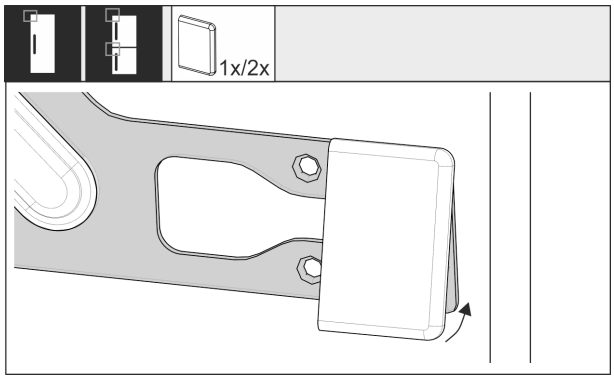

Fig. 58

▶ Put the cover on the crosspiece on the handle side.

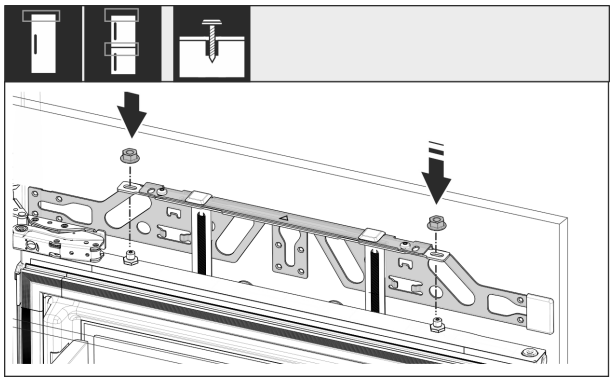

Fig. 59

▶ Attach the custom panel and loosely screw the lock nuts onto the adjusting bolts.

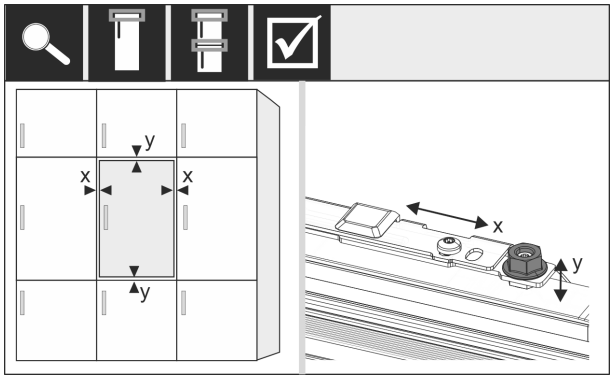

Fig. 60

▶ Align the custom panel in the X and Y direction using the adjusting bolts.

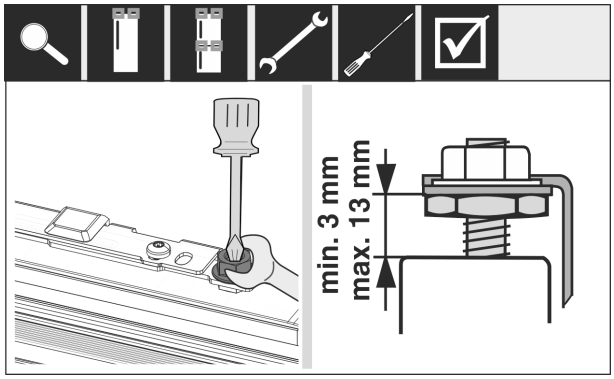

Fig. 61

▶ Tighten the lock nuts.
▶ Check the adjusted height.

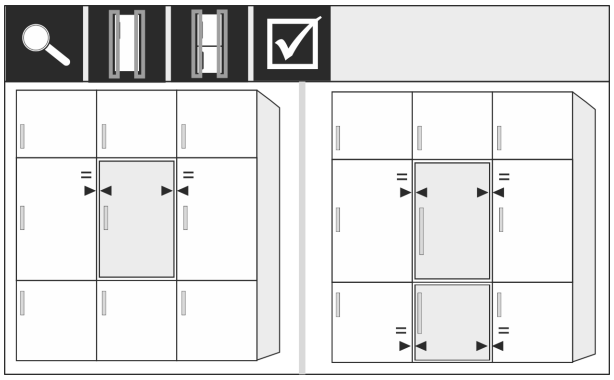

Fig. 62

For front panels thicker than 19 mm:

▶ Check the dimensions, weights and information in the following sections: (see 3.4 Custom panel weights) (see 3.14 Unit fronts)

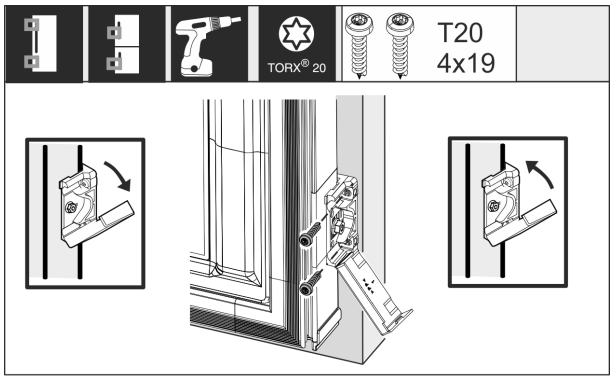

Fig. 63

Mounting the fastening bracket on the custom panel:

▶ Open the cover.

Mounting the fastening bracket on the custom panel:

▶ Align the front edge of the mounting bracket parallel with the custom door panel edge and screw the bracket down tightly.

Mounting the fastening bracket on the custom panel:

▶ Fold up the cover.

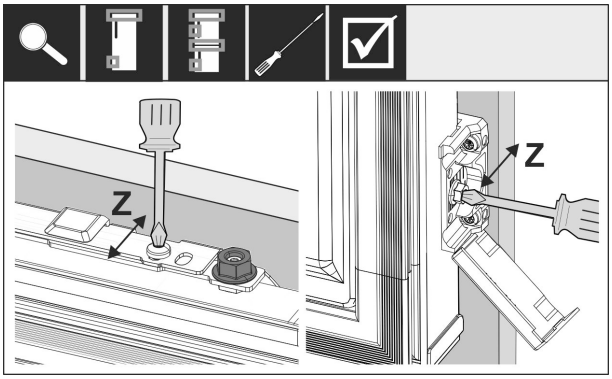

Fig. 64

Align the custom panel in the Z direction:

▶ Loosen the adjusting screw on the crosspiece and the screw on the mounting bracket.
▶ Move the door.

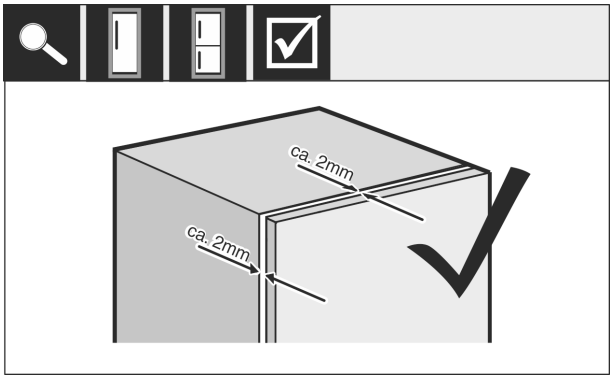

Fig. 65

▶ Check the gap between the custom panel and the unit body.
▶ Check all the screws and tighten them if necessary.

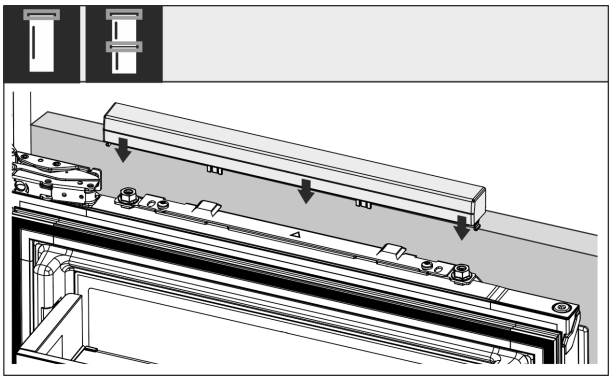

Fig. 66

▶ Put on the top cover.

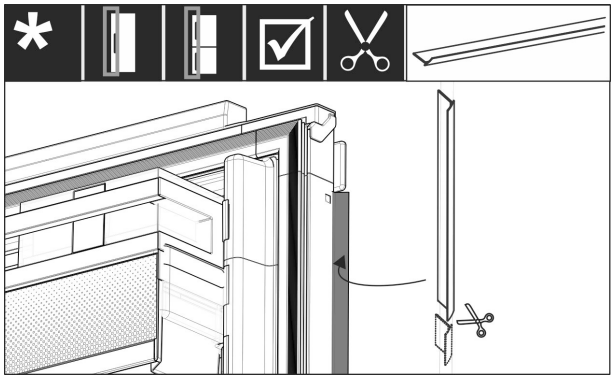

Fig. 67

▶ Cut the sealing strip to the required length.
▶ Insert the sealing strip between the front panel and the appliance door.

To make sure the appliance is correctly installed and there will not be any icing up, condensation or malfunctions, the following criteria apply:

- The door must close properly.
- The custom door panel must not touch the body of the unit.
- The seal on the upper corner on the handle side must be fitted securely.

▶ Check recess installation according to the criteria above.

3.14 Unit fronts

3.14.1 Dimensions

You require one unit door or two unit doors depending on the appliance variant. The size of the applicable unit door(s) depends on the total niche size and the unit body thickness.

Note
Observe the corresponding appliance and niche dimensions, and installation sketches.

General specifications:

- Please note our appliance-specific recommendations on size and weight for fixed door installation. (see 3.4 Custom panel weights)
- The unit body thickness should be at least 16 mm and no more than 19 mm.
- Pay attention to the gap position in the event of double unit door installation.

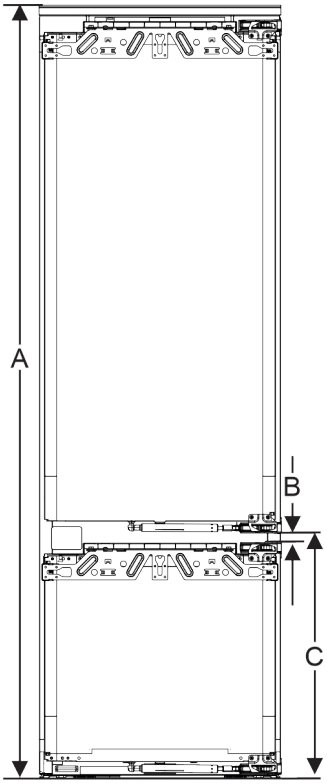

Fig. 68 Gap position for double-door unit front

Niche height 178 with 3 drawers	
Appliance height (A) (mm)	1770
Gap (B) (mm)	15
Gap position (C) for fixed door (mm)	695 + 15

Additional unit door above, below or adjacent:

- The vertical gap dimension between the unit doors must be 4 mm.
- The horizontal gap dimension between the unit doors must be 4 mm. Check the collision properties here. (see 3.14.3 Adjusting the joint gap without collisions)

Weight and hinges:

- If the unit fronts are heavy, the stress on the hinge is very high. The hinge may be damaged. Please note the maximum weight specification for your appliance in the chapter Furniture front weights (see 3.4 Custom panel weights) .
- If the unit front exceeds the maximum permissible weight, an appliance with sliding door technology can help, as the weight is divided over several concealed hinges on the unit.
- If you use long unit fronts that extend a long way over the appliances, we recommend an additional hinge (e.g. Kamat) that has exactly the same pivot point as the fixed door hinge used on your appliance. Using a further hinge (Kamat) divides the weight over several points. We recommend using a milled compensation fitting for high unit fronts, in order to counteract warping (convex/ concave).

3.14.2 Fitting the unit front(s)

Note the following when installing:

- The unit front must be installed symmetrically to the fridge door.
- The adjacent unit front is on the exact same level.
- The adjacent unit front has the same edge radius as the appliance front.

- The unit front is level and not strained.
- The unit front has a minimum depth setting of around 2 mm to the body.

▶ Install the appliance in the niche. (see 3.13 Installing the appliance in the recess)
▶ Fasten the unit front to the appliance door. (see 3.13 Installing the appliance in the recess)
▶ Adjust the gap.
▶ Check the unit front for collisions. (see 3.14.3 Adjusting the joint gap without collisions)

3.14.3 Adjusting the joint gap without collisions

3.14.3 Joint gap with adjoining furniture side panel

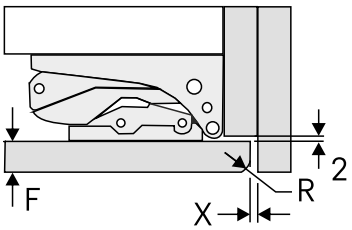

Fig. 69 Joint gap with adjoining furniture side panel
(F) Front thickness **(X)** Min. joint gap
(R) Unit front corner radius

Front thickness F [mm]	Unit front corner radius R [mm]	Min. joint gap X (vertical) [mm]
16 to 20	0 to 3	3
22	0	4
	1	4
	2	3
	3	3
24	0	8
	1	7
	2	6
	3	6
26	Not recommended.	

3.14.3 Joint gap with adjoining unit door

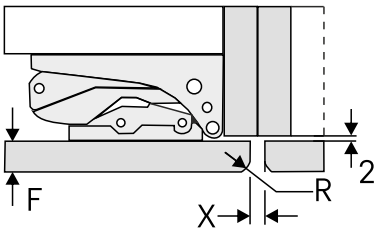

Fig. 70 Joint gap with adjoining unit door
(F) Front thickness **(X)** Min. joint gap
(R) Unit front corner radius

Front thickness F [mm]	Unit front corner radius R [mm]	Min. joint gap X (vertical) [mm]
16 to 20	0 to 3	2
22	0	4
	1	3
	2	3
	3	2
24	0	6
	1	5
	2	5
	3	4
26	0	8
	1	7
	2	7
	3	6

3.15 After installation

▶ Remove all transport safety fittings from the interior.

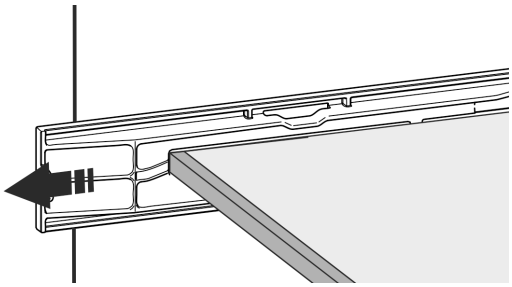

Fig. 71

▶ Remove transport safety fittings from the shelves.

NOTICE
Damage to property caused by pointed or sharp objects!
Using pointed or sharp objects when removing packaging material may damage the appliance.
▶ Do not use any pointed or sharp objects to remove the packaging material.

▶ Remove protective films from the interior: Peel the film off flat along the surface of the component to minimise its adhesive force.
▶ Clean the appliance. (see 10.8 Cleaning the appliance)
▶ Note down the type (model, number), appliance name, appliance/serial number, date of purchase and retailer's address.

3.16 Connecting the appliance to the power supply

WARNING
Danger of electric shock and injury due to damaged appliance or damaged mains cable!
Danger of cuts and fatal injuries. If the appliance or the mains cable is damaged during transport, you may be electrocuted. You could also cut yourself on damaged parts of the appliance housing.
▶ Check the appliance and the mains cable for damage after transport.
▶ Never put the appliance into operation if the appliance or the mains cable are damaged.
▶ Contact Customer Service.

You can connect your appliance to the mains using the power cable supplied separately. The mains power cable has an appliance coupler at one end and a mains plug at the other end.

Make sure that the following requirements are fulfilled:

- The appliance and power cable are undamaged.
- The appliance is installed in accordance with the regulations. (see 3.13 Installing the appliance in the recess)
- Requirements for the electrical connection are met.
- Dimensions for connection in accordance with regulations are known and observed.
- Mains voltage and frequency correspond to the specifications on the type plate.
- The socket is earthed according to the regulations and fused.
- The fuse tripping current is between 10 A and 16 A.
- The socket is easily accessible and is not behind the appliance. (see 3.3 Recess dimensions)

NOTICE
Danger of damage to incorrect operation!
Damage to the electrical components of the appliance.
▶ Only use the supplied mains cable.

WARNING
Danger of fire due to incorrect connection!
Burns.
Damage to the appliance.
▶ Do not use an extension cable.
▶ Do not use distributor blocks.

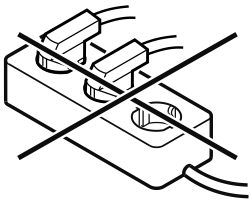

NOTICE
Danger of damage to incorrect connection!
Damage to the appliance.
▶ Do not connect the appliance to a stand-alone inverter, e.g. solar power systems and petrol generators.

▶ Connect the mains cable plug to the power supply. Ensure that the plug is tightly in the socket.
▷ The Liebherr logo appears in the display.
▷ The display switches to the standby symbol.
▷ If no action occurs within 60 seconds: The standby symbol fades or disappears.
▷ The appliance is connected. For information regarding first use, see the following section or the operating instructions.

3.17 Disposing of packaging

WARNING
Danger of suffocation due to packing material and plastic film!
▶ Do not allow children to play with packing material.

The packaging is made of recyclable materials:

- corrugated board/cardboard
- expanded polystyrene parts
- polythene bags and sheets
- polypropylene straps
- nailed wooden frame with polyethylene panel*

▶ Take the packaging material to an official collecting point.

4 Functionality of the Touch & Swipe display

You operate your appliance using the Touch & Swipe display. You select appliance functions in the Touch & Swipe display (hereafter referred to as display) by tapping them. If you do not perform any action on the display for 10 seconds, the display either jumps back to the higher-level menu or directly to the status display.

4.1 Navigation and symbol explanation

In the illustrations, different symbols are used to navigate the display. The following table describes these symbols.

Symbol	Description
	Briefly touch the display: Activates/deactivates function. Confirms selection. Opens submenu.
	Touch the display for a specified time (e.g. 3 seconds): Activates/deactivates function or value.
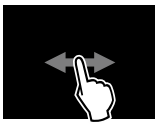	**Swipe left or right:** Navigate in the menu.
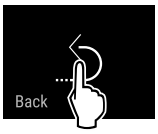	**Briefly touch the Back symbol:** Jumps back one menu level.
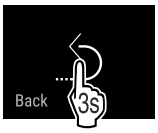	**Press and hold the Back symbol for 3 seconds:** Jumps back to the status display.

* Depending on model and options

Symbol	Description
➡ 🕓	**Arrow with clock:** It takes more than 10 seconds for the following message to appear in the display.
➡ ➡ ➡ 2s 5s 10s	**Arrow with a time indication:** It takes the specified amount of time until the following message appears in the display.
	“Open Settings menu” symbol: Navigates to the Settings menu and opens the settings menu. If necessary: Navigate to the desired function in the Settings menu. (see 4.2.1 Opening the Settings menu)
	“Open Advanced menu” symbol: Navigates to the Advanced menu and opens the advanced menu. If necessary: Navigate to the desired function in the Advanced menu. (see 4.2.2 Opening the expanded menu)
No action for 10 seconds	If you do not perform any action on the display for 10 seconds, the display either jumps back to the higher-level menu or directly to the status display.
Close the door and open it again.	If you close the door and immediately open it again, the display jumps directly back to the status display.

Note: Illustrations of the display are shown in the English version.

4.2 Menus

The appliance functions are distributed over various menus:

Menu	Description
Main menu	When you switch the appliance on, you are automatically in the main menu. From here you can navigate to the most important appliance functions, to the Settings menu and to the Advanced menu.
Settings Settings menu	The Settings menu contains additional appliance functions for setting up your appliance.
Advanced menu	The advanced menu contains special appliance functions for setting up your appliance. Access to the Advanced menu is protected by the numerical code **1 5 1**.

4.2.1 Opening the Settings menu

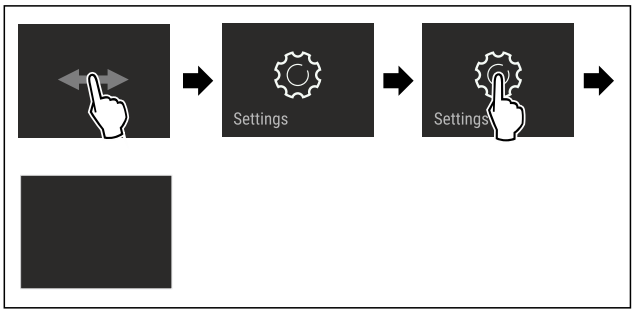

Fig. 72 Example illustration

▶ Carry out action steps according to the illustration.
▷ Settings menu is open.
▶ If necessary: Navigate to the desired function.

4.2.2 Opening the expanded menu

Fig. 73

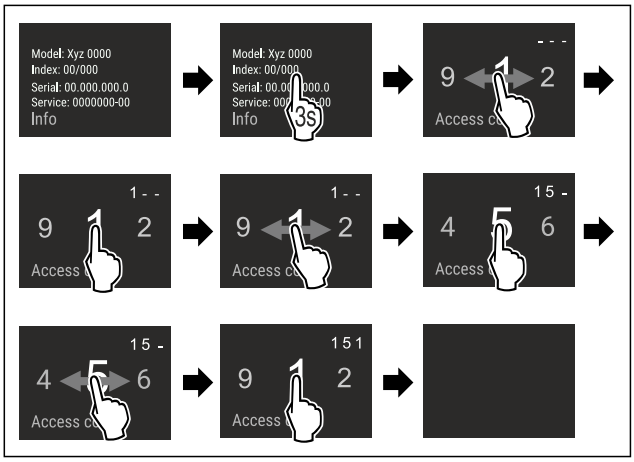

*Fig. 74 Example illustration, access with numerical code **151***

▶ Carry out action steps according to the illustration.
▷ The expanded menu is open.
▶ If necessary: Navigate to the desired function.

4.3 Sleep mode

If you do not touch the display for 1 minute, the display switches to sleep mode. In sleep mode, the display brightness is dimmed.

4.3.1 Ending sleep mode

▶ Touch the display briefly with your finger.
▷ Sleep mode is ended.

5 Putting into operation

5.1 Switching on appliance (first use)

Make sure that the following requirements are fulfilled:

❑ The appliance is properly installed and connected according to the installation instructions.
❑ All adhesive strips, adhesive and protective films and transport locks are removed from inside and on the appliance.

- ❑ All marketing leaflets are removed from the drawers.
- ❑ You are familiar with the functionality of the Touch & Swipe display. (see 4 Functionality of the Touch & Swipe display)

Switch on the appliance using the Touch & Swipe display:

▶ If the display is in sleep mode: Briefly touch the display.
▶ Carry out action steps according to the illustration.

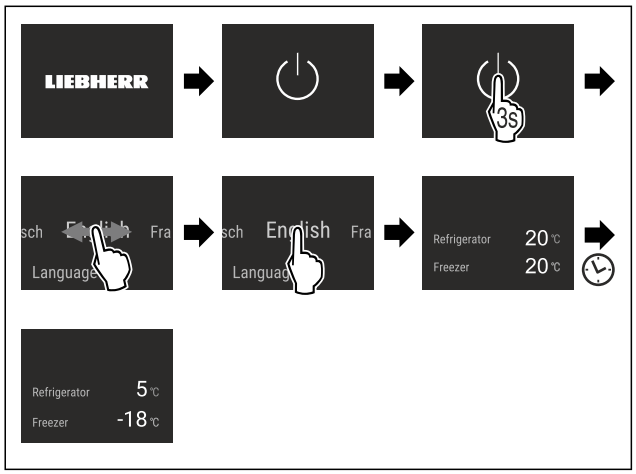

Fig. 75 Example illustration

▷ Status display appears.
▷ The appliance cools to the temperature set at the factory.
▷ The appliance starts in demo mode (status display with DEMO appears): If the appliance starts in demo mode, you can deactivate demo mode within the next 5 minutes. (see Demo mode)

More information:

- Start the IceMaker for the first time. (see 5.2 Starting the IceMaker for the first time)
- Start the SmartDevice for the first time. (see 2.3 SmartDevice) and (see WiFi)

Note
The manufacturer recommends:
▶ Stock with food: Wait for around 6 hours until the set temperature is reached.
▶ **Store frozen foods** at -18 °C or colder.
▶ Observe the notes on storing food. (see 6.1 Information regarding storage)

Note
Accessories can be purchased from the Liebherr-Hausgeräte store at go.liebherr.com/47wtc4.

5.2 Starting the IceMaker for the first time

If your appliance is equipped with IceMaker, you must clean the IceMaker **before using it for the first time**.

Make sure that the following requirements are fulfilled:

- ❑ The water supply has been connected. See Installation Guide or mounting instructions.
- ❑ The appliance is properly installed and connected.

▶ Clean the IceMaker. (see 10.8.4 Cleaning the IceMaker)

6 Storage

6.1 Information regarding storage

WARNING
Fire hazard from electrical appliances!
If you use electrical appliances in the food area of your appliance, they can cause a fire.
▶ Do not use electrical appliances in the food area of the appliance unless recommended by the manufacturer.

Note
The energy consumption increases and the cooling power goes down if ventilation is not sufficient.
▶ Always keep air slots clear.

Observe the following specifications for storage:

- Keep the air vents on the fan free.
- In the freezer compartment: Package food properly.
- Package or cover foods that readily take on or give off odours or taste in closed containers.
- Keep liquids in closed containers.
- Leave space between goods to ensure good air circulation.
- Store food according to the instructions on the packaging.
- Always observe the best-before date indicated on the packaging.

Note
Failure to follow these guidelines can lead to foodstuffs spoiling.

6.2 Fridge compartment

The air circulation in the appliance creates different temperature zones. You will find the different temperature zones in the appliance and equipment overview. (see 2.2 Overview of the appliance and equipment)

6.2.1 Arranging your food properly

CAUTION
Risk of injury and damage to the appliance due to incorrectly stored food or objects!
If you place food or objects on the bottom glass shelf, the door may not close properly. This could cause the door racks to break, food or objects to fall out and cause injury.
▶ Keep the front area of the bottom glass shelf clear.

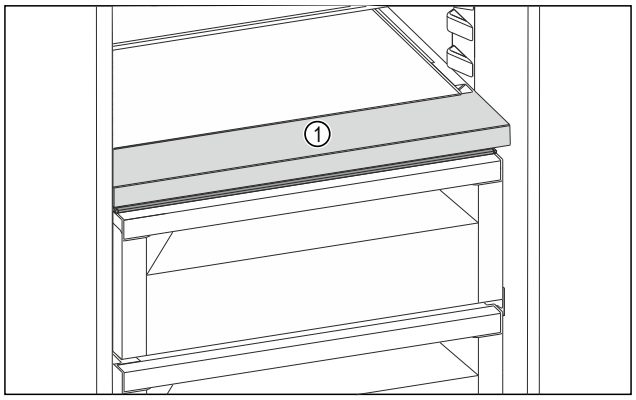

Fig. 76 Example illustration
(1) Front area

- ▶ Upper area and door: Store butter, cheese, tinned food and tubes.
- ▶ Coldest temperature zone: Store perishable foods such as pre-cooked meals.

6.3 BioFresh

BioFresh will extend the storage time for some fresh foods compared to traditional refrigeration.

Note
If the temperature drops below 0 °C foods may freeze.
▶ Store cold-sensitive produce such as cucumbers, aubergines, courgettes and tropical fruit in the fridge compartment.

6.3.1 Fruit & Vegetable safe

This safe creates a storage climate of close to 0 °C. The compartment lid ensures constant levels of humidity. This storage climate is suitable for storing unpackaged food with high intrinsic moisture (for example, lettuce, vegetables, fruit).

The humidity in the compartment depends on the moisture content of the chilled goods placed in it, and also depends on how often the compartment is opened. You can regulate the humidity level.

Arranging your food properly

▶ Store unpackaged fruit and vegetables.
If the humidity is too high:
▶ Regulate the humidity.

6.3.2 Meat & Dairy safe

Arranging your food properly

▶ Store dry or packaged food.

6.4 Freezer compartment

Here, a dry, frosty storage climate is created at -18 °C. A frosty storage climate is suitable for storing frozen food for several months, for making ice cubes or freezing fresh food.

6.4.1 Freezing food

Freezing quantity

The maximum amount of fresh food that you can freeze within 24 hours is specified on the type plate (see 11.5 Model plate) under “Freezing capacity ... kg/24h”.

To ensure that food quickly freezes through, adhere to the following quantities per package:

- Fruit and vegetables up to 1 kg
- Meat up to 2.5 kg

Freezing food using SuperFrost

Depending on the quantity to be frozen, you can activate SuperFrost before freezing in order to achieve lower freezing temperatures. (see SuperFrost)
▶ Activate SuperFrost if the amount of food you have to freeze is more than approx. 2 kg.

The time at which you activate SuperFrost depends on the amount of food you have to freeze:

Freezing quantity	Time at which you should activate SuperFrost
Small amount of food to freeze	Activate SuperFrost about 6 hours before freezing. As soon as the appliance automatically deactivates SuperFrost, you can rearrange the food.
Maximum amount of food to freeze	Activate SuperFrost about 24 hours before freezing. As soon as the appliance automatically deactivates SuperFrost, you can rearrange the food.

Arranging your food properly

CAUTION
Risk of injury from broken glass!
Bottles and cans with beverages can burst during freezing. This applies in particular to carbonated beverages.
▶ Only freeze bottles and cans with beverages if you have activated the BottleTimer function in the SmartDevice app.

Freezing quantity	Arranging your food properly
Small amount of food to freeze	Distribute packaged groceries throughout all drawers. If possible, place groceries at the back of the drawer near the rear wall.
Maximum amount of food to freeze	Distribute packaged groceries throughout all drawers. If possible, place groceries at the back of the drawer near the rear wall.

6.4.2 Defrosting food

WARNING
Risk of food poisoning!
▶ Do not re-freeze thawed food.
▶ Use defrosted foodstuff as soon as possible.

You can defrost food in several ways:

- In the fridge compartment
- In the microwave
- In the oven/fan-assisted oven
- At room temperature

▶ Take out only as much food as necessary.

6.5 Storage times

Refer to the specified storage times as a guide.

In the case of foods with a minimum shelf life, the date indicated on the packaging still applies.

6.5.1 Fridge section

Always follow the best-before date stated on the packaging.

6.5.2 BioFresh

Recommended storage periods in the Meat & Dairy-Safe		
Butter	at 1 °C	up to 90 days
Hard cheese	at 1 °C	up to 110 days

Recommended storage periods in the Meat & Dairy-Safe		
Milk	at 1 °C	up to 12 days
Sausage, cold meats	at 1 °C	up to 8 days
Poultry	at 1 °C	up to 6 days
Pork	at 1 °C	up to 6 days
Beef	at 1 °C	up to 6 days
Game	at 1 °C	up to 6 days

Note

▶ Remember that high-protein foods perish quicker; shellfish and crustaceans do not last as long as fish, and fish does not last as long as meat.

Recommended storage periods in the Fruit & Vegetable-Safe		
Vegetables, salads		
Artichokes	at 1 °C	up to 14 days
Celery	at 1 °C	up to 28 days
Cauliflower	at 1 °C	up to 21 days
Broccoli	at 1 °C	up to 13 days
Chicory	at 1 °C	up to 27 days
Lettuce	at 1 °C	up to 19 days
Peas	at 1 °C	up to 14 days
Kale	at 1 °C	up to 14 days
Carrots	at 1 °C	up to 80 days
Garlic	at 1 °C	up to 160 days
Turnip	at 1 °C	up to 14 days
Lettuce	at 1 °C	up to 13 days
Herbs	at 1 °C	up to 13 days
Leeks	at 1 °C	up to 29 days
Mushrooms	at 1 °C	up to 7 days
Radishes	at 1 °C	up to 10 days
Brussels sprouts	at 1 °C	up to 20 days
Asparagus	at 1 °C	up to 18 days
Spinach	at 1 °C	up to 13 days
Savoy	at 1 °C	up to 20 days
Fruit		
Apricots	at 1 °C	up to 13 days
Apples	at 1 °C	up to 80 days
Pears	at 1 °C	up to 55 days
Blackberries	at 1 °C	up to 3 days
Dates	at 1 °C	up to 180 days
Strawberries	at 1 °C	up to 7 days
Figs	at 1 °C	up to 7 days
Blueberries	at 1 °C	up to 9 days
Raspberries	at 1 °C	up to 3 days
Currants	at 1 °C	up to 7 days
Sweet cherries	at 1 °C	up to 14 days

Recommended storage periods in the Fruit & Vegetable-Safe		
Kiwis	at 1 °C	up to 80 days
Peaches	at 1 °C	up to 13 days
Plums	at 1 °C	up to 20 days
Cranberries	at 1 °C	up to 60 days
Rhubarb	at 1 °C	up to 13 days
Gooseberries	at 1 °C	up to 13 days
Grapes	at 1 °C	up to 29 days

6.5.3 Freezer compartment

Recommended storage period for various types of food		
Ice cream	at -18 °C	2 to 6 months
Sausages, ham	at -18 °C	2 to 3 months
Bread, baked goods	at -18 °C	2 to 6 months
Game, pork	at -18 °C	6 to 9 months
Fatty fish	at -18 °C	2 to 6 months
Lean fish	at -18 °C	6 to 8 months
Cheese	at -18 °C	2 to 6 months
Poultry, beef	at -18 °C	6 to 12 months
Vegetables, fruit	at -18 °C	6 to 12 months

7 Saving energy

- Pay attention to good ventilation. Do not cover ventilation holes or grids.
- Always keep the fan air slits clear.
- Do not install the appliance in direct sunlight or near radiators or similar sources of heat.
- If the appliance is installed directly next to an oven, the energy consumption may increase slightly. This is dependent on the service life and usage intensity of the oven.
- Energy consumption depends on the installation conditions, e.g. the ambient temperature . A warmer ambient temperature can increase the energy consumption.
- Open the appliance for as short a time as possible.
- The lower the temperature is set the higher the energy consumption.
- Sort your food: home.liebherr.com/food.
- Keep all food properly packed and covered. This prevents frost from forming.
- Only take food out for as long as necessary so that it doesn't warm up too much.
- Inserting warm food: allow to cool down to room temperature first.
- Thaw frozen food in the refrigerator.
- For longer periods of absence, use HolidayMode (see HolidayMode) .

8 Controls

8.1 Controls and displays

8.1.1 Status display

The status display shows the actual temperature and is the initial display. Navigation to the functions takes place from there.

8.1.2 Display symbols

Display symbols provide information on the current appliance status:

Symbol	Appliance status
	Standby The appliance or temperature zone is switched off.
	Flashing number Appliance is working. Temperature flashes until the set temperature is reached.
	Flashing symbol Appliance is working. Setting is made.

8.2 Appliance functions

8.2.1 Notes on the appliance functions

The appliance functions are set at the factory so that your appliance is fully functional.

Before you alter, activate or deactivate the device functions, make sure that the following requirements are met:

- ❑ You have read and understood the descriptions of how the display works. (see 4 Functionality of the Touch & Swipe display)
- ❑ You have familiarised yourself with the operating and display elements of your appliance.

Switching the appliance off and on

Use this function to switch the entire appliance off and on.

Switching off the appliance

When you switch the appliance off, then the previously saved settings are saved.

Make sure that the following requirements are fulfilled:

- ❑ Handling instructions (see 12 Shutting down) are carried out.

Fig. 77

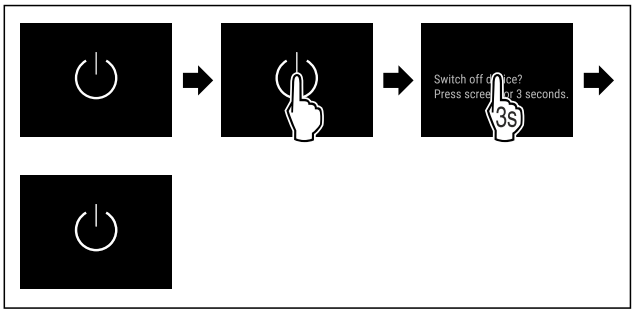

Fig. 78

▶ Carry out action steps according to the illustration.
▷ Appliance is switched off.
▷ The standby symbol appears in the display.
▷ Display turns black.

Switching on the appliance

If the display is in sleep mode:

▶ Briefly touch the display.

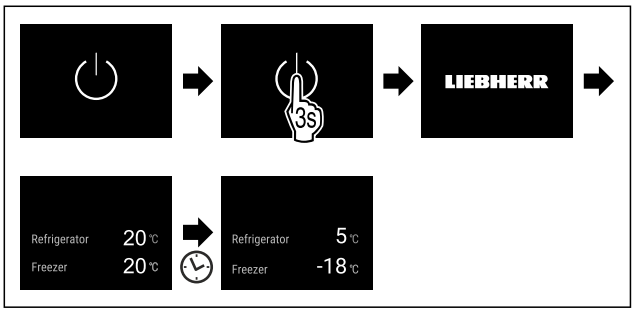

Fig. 79 Example illustration

▶ Carry out action steps according to the illustration.
When the appliance starts in demo mode:
▶ Deactivating demo mode. (see Deactivating demo mode)
▷ The appliance is switched on.
▷ Previous settings are restored.
▷ The appliance cools to the target temperature set.

Switching temperature zone off and on

You can switch temperature zones of the appliance off independently.

Switching the fridge compartment off

Make sure that the following requirements are fulfilled:

- ❑ Refrigerator compartment has been emptied.

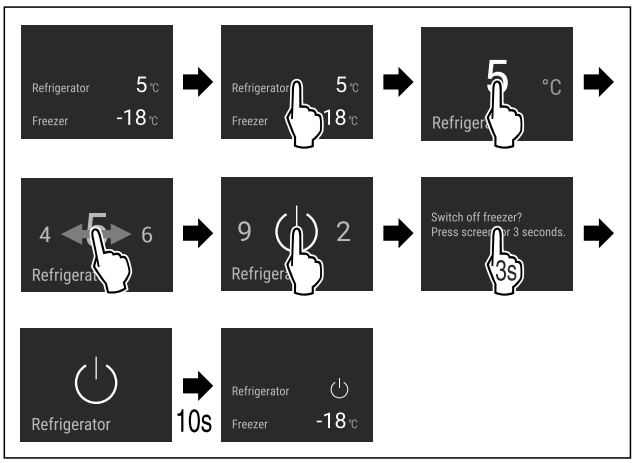

Fig. 80 Example illustration

▶ Carry out action steps according to the illustration.
▷ Refrigerator compartment is switched off.

Switching the fridge compartment on

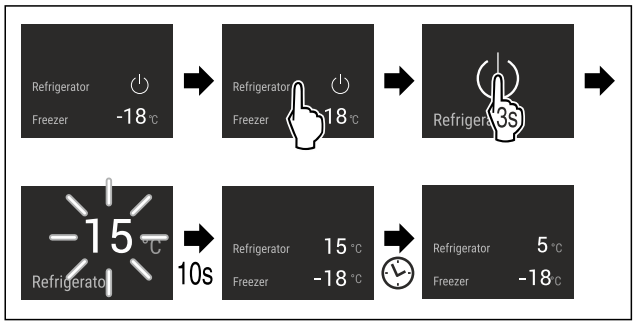

Fig. 81 Example illustration

▶ Carry out action steps according to the illustration.
▷ Refrigerator compartment is switched on.
▷ The appliance cools to the last set temperature.

5 °C Temperature

Use this function to set the temperature.

The temperature depends on the following factors:

- Frequency of door opening
- Duration of door opening
- Room temperature of the installation site
- Type, temperature and quantity of food

Temperature zone	Factory-set temperature	Recommended setting
5 °C Fridge section	5 °C	4 °C
-18 °C Freezer section	-18 °C	-18 °C
	0 °C	B-Value (see BioFresh B-Value)

Setting the temperature in the fridge section

▶ Carry out action steps according to the illustration.
▷ Temperature is set.

Setting the temperature in the freezer section

▶ Carry out action steps according to the illustration.
▷ Temperature is set.

Setting the temperature in BioFresh

Set the temperature using the **BioFresh B-Value**.
(see BioFresh B-Value)

B5 BioFresh B-Value

Use this function to set the BioFresh B-Value. With the BioFresh B-Value, you can set BioFresh slightly warmer or colder if necessary due to higher or lower ambient temperatures. The BioFresh B-Value is pre-set to value B5 as delivered. If you change the B-Value, refer to the following table:

Value	Description
B1	Lowest temperature
B1-B4	The temperature can drop below 0 °C which means foods can easily freeze.*
B5	Pre-set temperature
B9	Highest temperature

Setting the BioFresh B-Value

Fig. 83

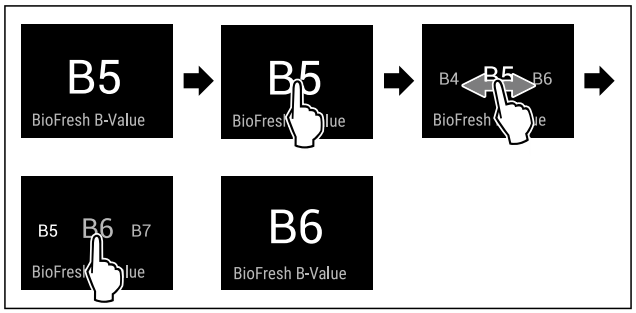

Fig. 85 Example illustration: Switch from B5 to B6.

▶ Carry out action steps according to the illustration.
▷ The BioFresh B-Value is set.

D1 D-Value

The D-Value is pre-set for your appliance and is not permitted to be changed.

SuperCool

You can use this function to activate or deactivate SuperCool. If SuperCool is activated, then the appliance increases the cooling capacity. It allows you to achieve lower cooling temperatures. You can activate SuperCool when you would like to cool a large quantity of food quickly.

If the function is active, the appliance operates at higher power. As a result, the appliance's operating noise may be temporarily louder and energy consumption will increase.

Activating SuperCool

Time for activation of the function:

- When you would like to store fresh food in the fridge section: Activate the function when inserting food.

Fig. 86

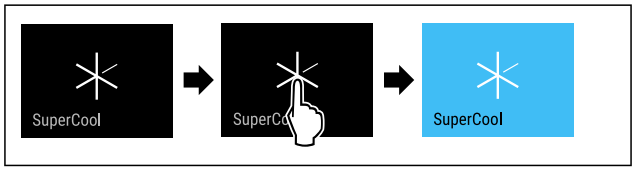

Fig. 87

▶ Carry out action steps according to the illustration.

-or-

▶ Activate with the SmartDevice app.

▷ SuperCool is activated.
▷ The temperature display turns blue.

Deactivating SuperCool

SuperCool is deactivated automatically after 18 hours. However, you can also deactivate SuperCool manually at any time:

*** Depending on model and options**

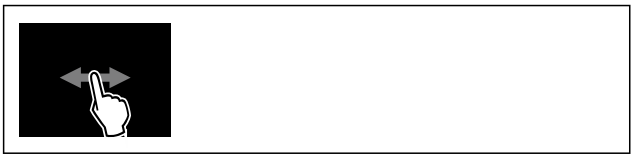

Fig. 88

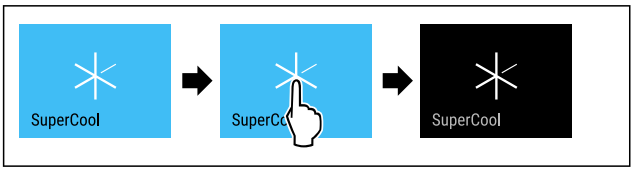

Fig. 89

▶ Carry out action steps according to the illustration.

-or-

▶ Deactivate with the SmartDevice app.

▷ SuperCool is deactivated.
▷ The appliance continues to run in normal mode.
▷ The appliance cools to the temperature set previously.

VarioTemp

This function allows you to use the freezer compartment as an additional cooling zone. You can set the temperature from -2 °C to 14 °C. If you activate this function, it may cause more noise. However, the appliance is still fully functional.

For storage of foodstuff in the freezer compartment with the VarioTemp function activated, Liebherr recommends:

Temperature range	Foodstuff
4 °C to 9 °C	Cooked foods, cheese, preserves
0 °C	Packaged fruit and vegetables
-2 °C	Fresh fish and seafood
10 °C to 14 °C	Cold-sensitive foodstuffs such as sweet potatoes, pumpkin or exotic fruits, food or drinks that should not be eaten too cold

Activating VarioTemp

Ensure that the following requirements are met:

❑ The IceMaker has been cleaned. (see 10.8.4 Cleaning the IceMaker)

WARNING

Risk of food poisoning!

▶ Do not re-freeze thawed food.
▶ Use defrosted foodstuff as soon as possible.

Fig. 90

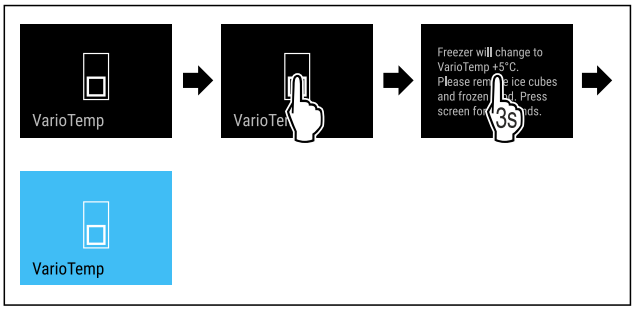

Fig. 91

▶ Carry out steps according to the illustration.
▷ VarioTemp is activated.
▷ IceMaker is deactivated.
▷ VarioTemp is set to the preselected value.
▷ The status display does not show the preset temperature until it is reached.

Adjusting VarioTemp

Ensure that the following requirements are met:

❑ The VarioTemp is activated. (see Activating VarioTemp)

WARNING

Risk of food poisoning!

▶ Do not re-freeze thawed food.
▶ Use defrosted foodstuff as soon as possible.

▶ Carry out steps according to the illustration.
▷ VarioTemp is adjusted.
▷ The status display does not show the new set temperature until it is reached.

Deactivating VarioTemp

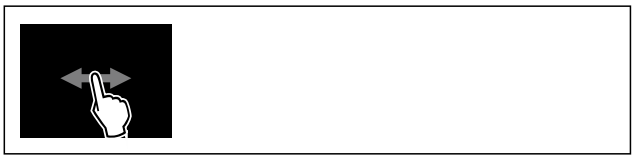

Fig. 92

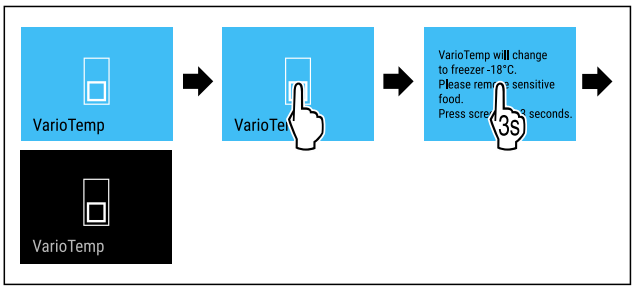

Fig. 93

▶ Carry out steps according to the illustration.
▷ VarioTemp is deactivated.
▷ The freezer compartment is cooled to the preset temperature.

SuperFrost

You can use this function to activate or deactivate SuperFrost. If SuperFrost is activated, then the appliance increases the freezing capacity. It allows you to achieve lower freezing temperatures.

Application:

- Quickly freeze fresh food through to the core.

This ensures that the nutrition, appearance and taste of frozen food is maintained.
- Increase the cold reserve in stored frozen food before defrosting the appliance.

If the function is active, the appliance operates at higher power. As a result, the appliance's operating noise may be temporarily louder and energy consumption will increase.

If the door is open for too long, e.g. because you are putting food in, the appliance automatically checks whether the actual temperature in the appliance matches the set temperature. If the difference exceeds a certain value, the appliance automatically cools more vigorously. As a result, the temperature shown on the display may be higher than the actual temperature in the appliance. This is normal and your appliance is working correctly.

Activating SuperFrost

Make sure that the following requirements are fulfilled:

❑ Freezing quantity and time for activation of SuperFrost are taken into account. (see Freezing food using SuperFrost)
❑ VarioTemp is deactivated. (see VarioTemp)

Fig. 94

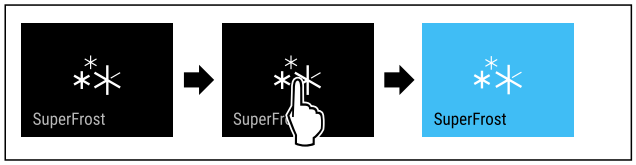

Fig. 95

▶ Carry out action steps according to the illustration.

-or-

▶ Activate with the SmartDevice app.

▷ SuperFrost is activated.
▷ The temperature display turns blue.

Deactivating SuperFrost

SuperFrost is automatically deactivated after 56 to 72 hours depending on the quantity of the food inserted. However, you can also deactivate SuperFrost manually at any time:

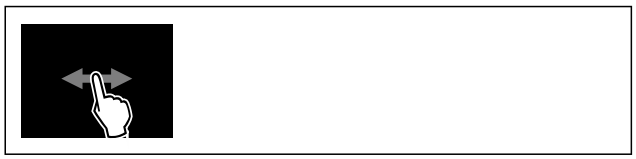

Fig. 96

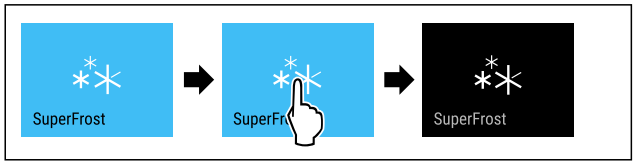

Fig. 97

▶ Carry out action steps according to the illustration.

-or-

▶ Deactivate with the SmartDevice app.

▷ SuperFrost is deactivated.
▷ The appliance continues to run in normal mode.
▷ The appliance cools to the temperature set previously.

PartyMode

You can use this function to activate or deactivate PartyMode. PartyMode activates various functions that are useful for a party.

PartyMode activates the following functions:

- SuperCool (see SuperCool)
- SuperFrost (see SuperFrost)
- IceMaker with MaxIce (see IceMaker / MaxIce)

You can adjust all listed functions individually and flexibly. When you deactivate PartyMode, all changes are discarded.

If the function is active, the device operates at higher power. As a result, the device's operating noise may be temporarily louder and energy consumption will increase.

Activating PartyMode

Make sure that the following requirements are fulfilled:

❑ The IceMaker has been started. (see 5.2 Starting the IceMaker for the first time)

Fig. 98

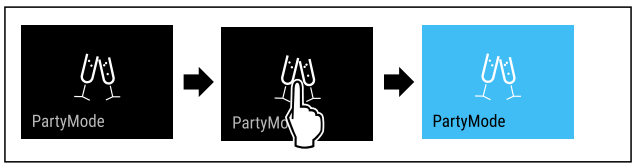

Fig. 99

▶ Carry out action steps according to the illustration.
▷ PartyMode and the associated functions are activated.
▷ The temperature display turns blue.
▷ The current temperature flashes until the target temperature is reached.

Deactivating PartyMode

The PartyMode is automatically deactivated after 24 seconds. However, you can also deactivate PartyMode manually at any time:

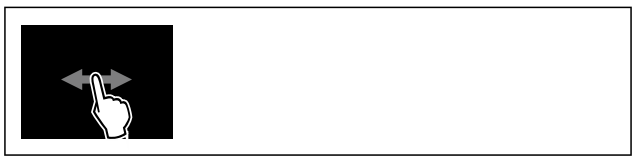

Fig. 100

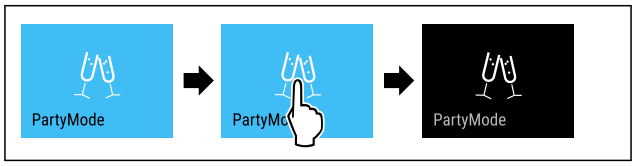

Fig. 101

▶ Carry out action steps according to the illustration.
▷ PartyMode is deactivated.
▷ The appliance cools to the temperature set previously: The current temperature flashes until the target temperature is reached.

HolidayMode

You can use this function to activate or deactivate Holiday-Mode. If you activate HolidayMode, the fridge section is set to 15 °C. This saves you energy during longer periods of absence and prevents bad odours and growth of mould.

Appliance status when HolidayMode is active
Fridge section cools to 15 °C.
BioFresh cools to 15 °C.
The set temperature is maintained in the freezer section.
PartyMode is deactivated.
SuperCool is deactivated.

Activating HolidayMode

▶ Empty the fridge section completely.
▶ Empty BioFresh completely.

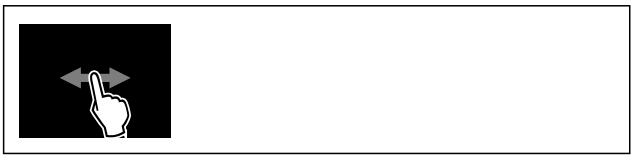

Fig. 102

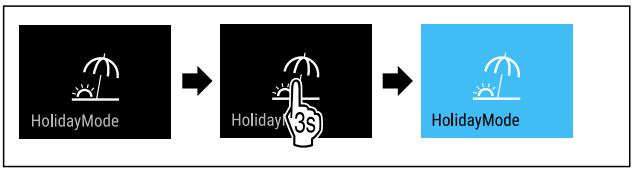

Fig. 103

▶ Carry out action steps according to the illustration.
▷ HolidayMode is activated.
▷ Temperature display turns blue and shows HolidayMode symbol.

Deactivating HolidayMode

Fig. 104

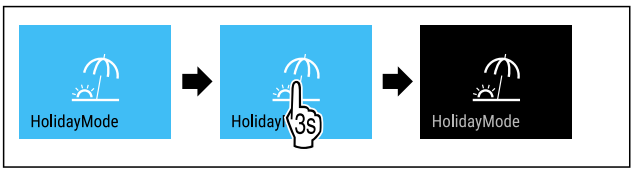

Fig. 105

▶ Carry out action steps according to the illustration.
▷ HolidayMode is deactivated.
▷ The appliance cools to the temperature set previously.

SabbathMode

You can use this function to activate or deactivate SabbathMode. If you activate this function, some electronic functions are switched off. As a result, your device meets the religious requirements for Jewish holidays such as Sabbath and complies with STAR-K Kosher certification.

Device status when SabbathMode is active
The status display shows SabbathMode permanently.
All functions on the display are locked except for the **Deactivate SabbathMode function**.
Active functions remain active.
The display remains bright when you close the door.
The interior lighting is deactivated.
Reminders are not implemented. The set time interval stops.
Reminders and warnings are not displayed.
There is no door alarm.
There is no temperature alarm.
The IceMaker is switched off.
The defrosting cycle operates only for the specified time, without considering the appliance consumption.
After a power failure, the appliance returns to SabbathMode.

Device status

Note
This appliance has certification from the “Institute for Science and Halacha”. (www.machonhalacha.co.il)

You can find a list of STAR-K-certified appliances at www.star-k.org/appliances.

Activating SabbathMode

WARNING
Danger of food poisoning from spoiled food!
If you have SabbathMode activated and a power failure occurs, no message appears in the status display about the power failure. Once the power is restored, the appliance continues to operate in SabbathMode. The power failure may mean that food spoils and the consumption of this food could lead to food poisoning.
After a power failure:
▶ Do not consume food that was frozen and has thawed out.

Fig. 106

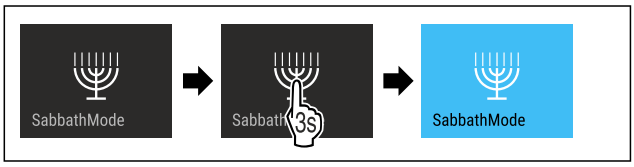

Fig. 107

▶ Carry out action steps according to the illustration.
▷ SabbathMode is activated.
▷ The status display shows SabbathMode permanently.

Deactivating SabbathMode

The SabbathMode is automatically deactivated after 80 hours. However, you can also deactivate SabbathMode manually at any time:

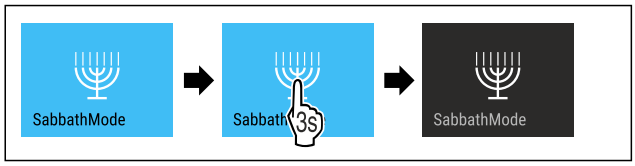

Fig. 108

▶ Carry out action steps according to the illustration.
▷ SabbathMode is deactivated.

EnergySaver

You can use this function to activate or deactivate Energy saving mode. If energy saving mode is activated, the energy consumption decreases and the temperature in the device increases. The food remains fresh, but the shelf life is shortened.

Temperature zone	Recommended setting (see Setting the temperature in the fridge section)	Temperature with active EnergySaver
5 °C Fridge section	4 °C	7 °C
-18 °C Freezer section	-18 °C	-16 °C

Temperatures

Activating EnergySaver

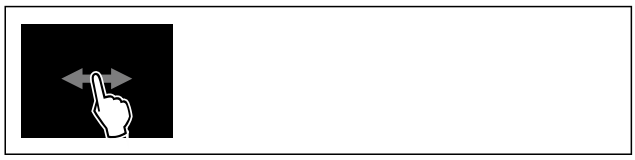

Fig. 109

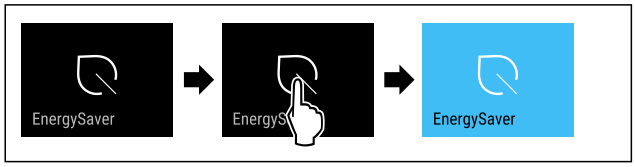

Fig. 110

▶ Carry out action steps according to the illustration.
▷ Energy saving mode is activated.

Deactivating EnergySaver

Fig. 111

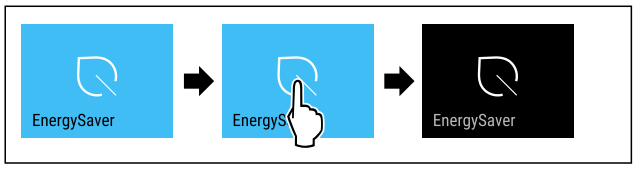

Fig. 112

▶ Carry out action steps according to the illustration.
▷ Energy saving mode is deactivated.

IceMaker / MaxIce

Use the IceMaker function to activate or deactivate the production of ice cubes. Use the MaxIce function to increase the amount of ice cubes produced by the IceMaker. MaxIce is automatically deactivated after 48 hours. However, you can also deactivate MaxIce manually at any time: (see Deactivating MaxIce)

More information on the number of ice cubes:	(see 11.1 Technical specifications)
Further information on the IceMaker water supply:	(see IceMaker water supply)
More information on cleaning the lines of the IceMaker:	(see TubeClean)

If the function is active, the device operates at higher power. As a result, the device's operating noise may be temporarily louder and energy consumption will increase.

Activating the VarioTemp function will result in the automated deactivation of the IceMaker. (see VarioTemp)

Activating IceMaker

Make sure that the following requirements are fulfilled:

❑ The water supply is established at the fixed water connection. See installation instructions.
❑ IceMaker is put into operation. (see 9.7 IceMaker)

Fig. 113

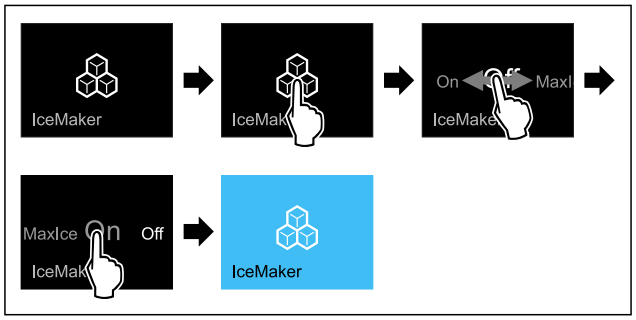

Fig. 114

▶ Carry out action steps according to the illustration.
-or-
▶ Activate with the SmartDevice app.

▷ IceMaker is activated. It can take up to 24 hours for the IceMaker to produce the first ice cubes.

Activating the IceMaker with MaxIce

If you have not activated the IceMaker function before, make sure that the following requirements are met:

❑ The water supply is established at the fixed water connection. See installation instructions.
❑ IceMaker is put into operation. (see 9.7 IceMaker)

Fig. 115

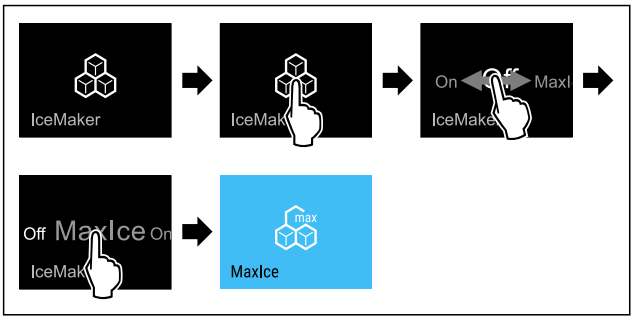

Fig. 116

▶ Carry out action steps according to the illustration.

-or-

▶ Activate with the SmartDevice app.

▷ The IceMaker is activated with MaxIce.

Changing between the IceMaker and MaxIce

If you have activated the IceMaker and would like to change to MaxIce:

Fig. 117

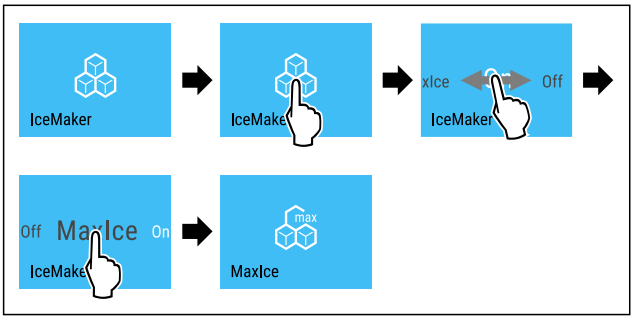

Fig. 118

▶ Carry out action steps according to the illustration.

▷ The IceMaker is activated with MaxIce.

If you have activated MaxIce and would like to change to the IceMaker:

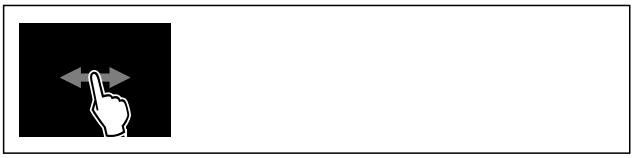

Fig. 119

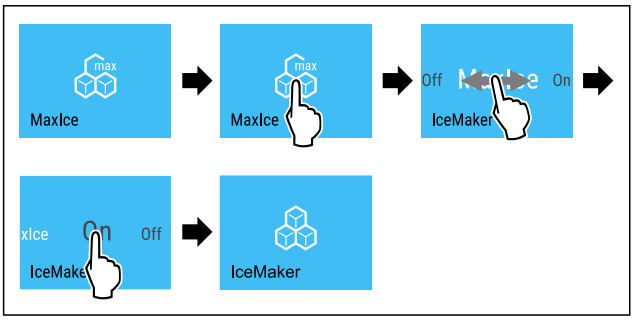

Fig. 120

▶ Carry out action steps according to the illustration.

▷ IceMaker is activated.

▷ MaxIce is deactivated.

Deactivating the IceMaker and MaxIce

Fig. 121

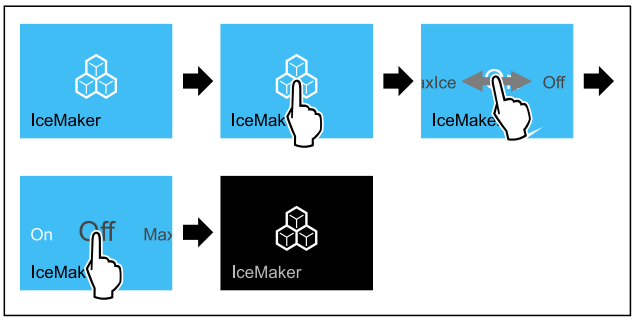

Fig. 122 Example illustration of the active IceMaker function

▶ Carry out action steps according to the illustration.

-or-

▶ Deactivate with the SmartDevice app.

▷ IceMaker and MaxIce are deactivated.

▷ If ice cubes are currently being made, the system completes the process.

▷ The IceMaker goes off automatically.

Deactivating MaxIce

▶ Activate the IceMaker. (see Activating IceMaker)

▷ MaxIce is deactivated.

▷ IceMaker is activated.

▷ To deactivate the IceMaker and MaxIce: (see Deactivating the IceMaker and MaxIce)

5 IceMaker water supply

Use this function to set the water supply. The water supply regulates the amount of water supplied. The water supply can be changed if it does not match the water pressure and the ice cube size dispensed.

The water supply is pre-set to value 4 as delivered. A value from 1 (smallest inflow volume) to 8 (largest inflow volume) can be selected.

Setting water supply

Make sure that the following requirements are fulfilled:

❑ The IceMaker has been started. (see 5.2 Starting the IceMaker for the first time)

❑ IceMaker is activated. (see IceMaker / MaxIce)

Fig. 123

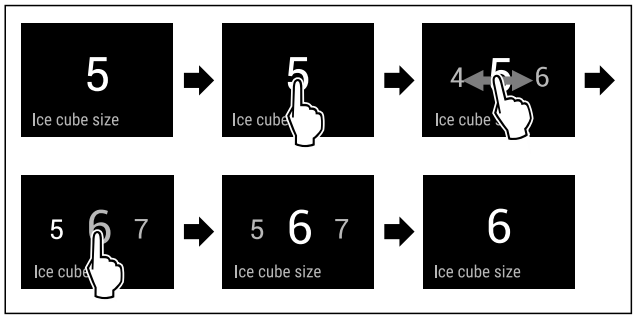

Fig. 124 Example illustration: Switch from value 5 to value 6.

▶ Carry out action steps according to the illustration.
▷ The water supply is set.

TubeClean

You can use this function to activate or deactivate TubeClean. If TubeClean is activated, it cleans the IceMaker lines.

Activating TubeClean

Make sure that the following requirements are fulfilled:

❑ IceMaker cleaning is prepared. (see 10.8.4 Cleaning the IceMaker)
❑ Empty container with a capacity of 1.5 l and with a maximum height of 10 cm is ready.

▶ Place the container in the drawer under the IceMaker.

Fig. 125

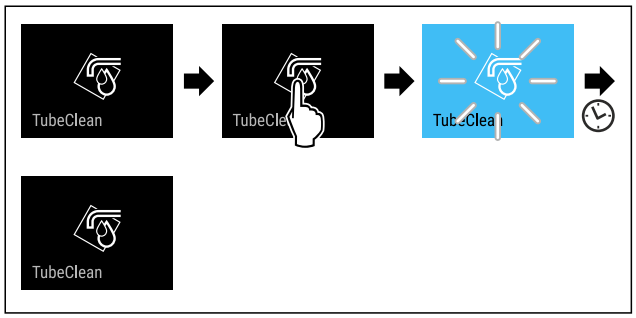

Fig. 126

▶ Carry out action steps according to the illustration.
▷ TubeClean is activated.
▷ The cleaning process has started: Icon flashes until the cleaning process is automatically completed after 60 minutes.
▷ When the cleaning process is complete: The device continues to run in normal mode.

Deactivating TubeClean

TubeClean is automatically ended after 60 minutes. However, TubeClean can also be deactivated at any time during the cleaning process:

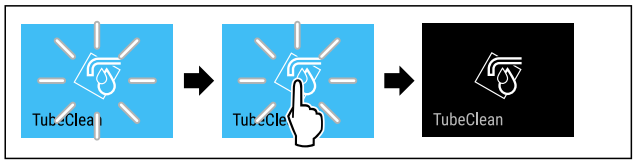

Fig. 127

▶ Carry out action steps according to the illustration.
▷ TubeClean is deactivated: Cleaning process is aborted.
▷ The device continues to run in normal mode.

CleaningMode

You can use this function to activate or deactivate CleaningMode. CleaningMode enables the appliance to be cleaned conveniently.

This setting applies to the fridge section.

Application:

- Clean the fridge section. (see 10.8 Cleaning the appliance)

Device status when CleaningMode is active
The status display shows CleaningMode permanently.
The fridge section is switched off.
Interior lighting is activated.
The reminders and warnings are not displayed. No signal tone sounds.

Device status

Activating CleaningMode

Fig. 128

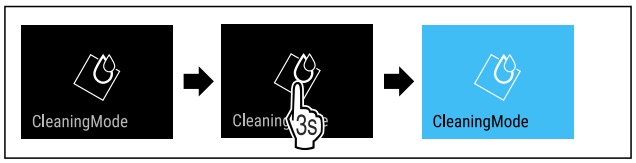

Fig. 129

▶ Carry out action steps according to the illustration.
▷ CleaningMode is activated.
▷ The status display shows CleaningMode permanently.

Deactivating CleaningMode

CleaningMode is deactivated automatically after 60 minutes. However, you can also deactivate CleaningMode manually at any time:

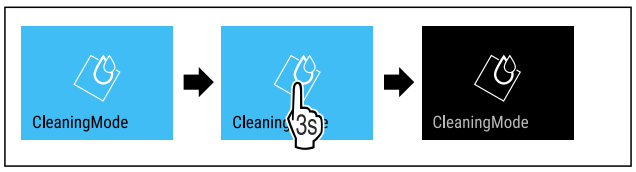

Fig. 130

▶ Carry out action steps according to the illustration.
▷ CleaningMode is deactivated.
▷ The appliance cools to the temperature set previously.

Input lock

You can use this function to activate or deactivate the input lock. The input lock prevents the appliance being operated accidentally, e.g. by children.

Application:

- Avoid unintentional modification of functions.
- Avoid unintentional switching off of the device.
- Avoid unintentional temperature setting.

Activating the input lock

If you activate the input lock, you can continue to navigate in the menus but you cannot select or change other functions.

Fig. 131

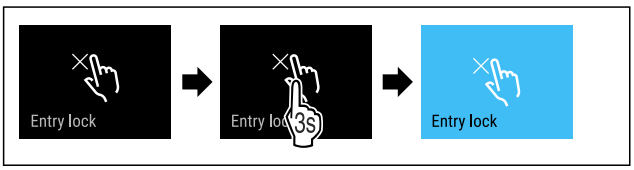

Fig. 132

▶ Carry out action steps according to the illustration.
▷ Input lock is activated.

Deactivating the input lock

Fig. 133

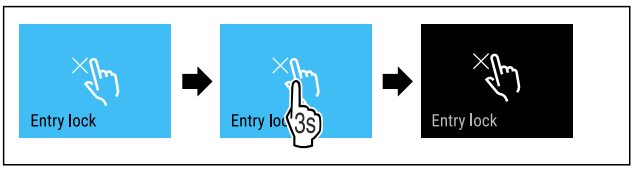

Fig. 134

▶ Carry out action steps according to the illustration.
▷ Input lock is deactivated.

Reminder

Use this function to activate or deactivate the reminders. The function is activated on delivery.

If the function is activated, the following reminders will appear:

- Replace the FreshAir activated carbon filter (see Replace the FreshAir activated carbon filter)

Activating the reminder

Fig. 135

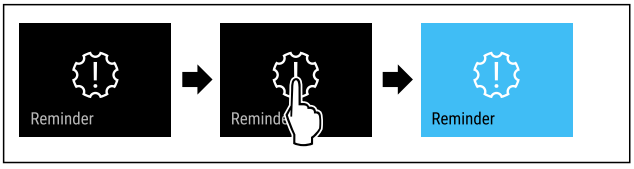

Fig. 136

▶ Carry out action steps according to the illustration.
▷ Reminder is activated.

Deactivating the reminder

Fig. 137

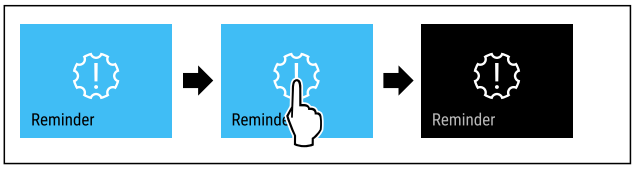

Fig. 138

▶ Carry out action steps according to the illustration.
▷ Reminder is deactivated.

Language

Use this function to set the display language.

You can select the following languages:

- Deutsch
- English
- Français
- Español
- Italiano
- Nederlands
- Čeština
- Polski
- Português
- Bulgarian
- Русский
- 温度单位

Setting the language

Fig. 139

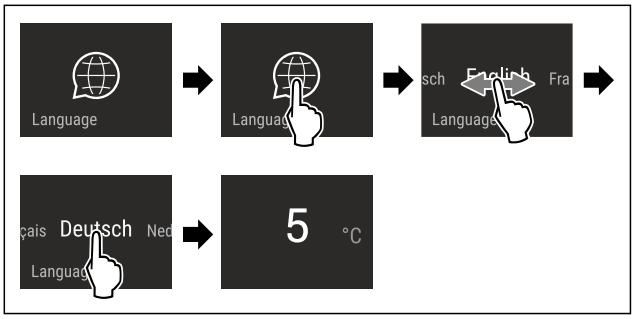

Fig. 140 Example illustration depending on the language and temperature

▶ Carry out action steps according to the illustration.
▷ The language is set.
▷ The display returns to the status display.

Temperature unit

Use this function to set the temperature unit. You can set degrees Celsius or degrees Fahrenheit as the temperature unit.

Setting the temperature unit

Fig. 141

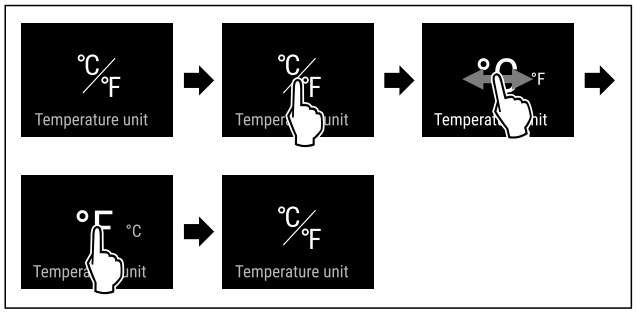

Fig. 143 Example illustration: Switch from degrees Celsius to degrees Fahrenheit.

▶ Carry out action steps according to the illustration.
▷ The temperature unit is set.

Display brightness

Use this function to set the display brightness in stages.

You can select the following brightness levels:

- 40 %
- 60 %
- 80 %
- 100 % (pre-setting)

Setting the brightness

Fig. 144

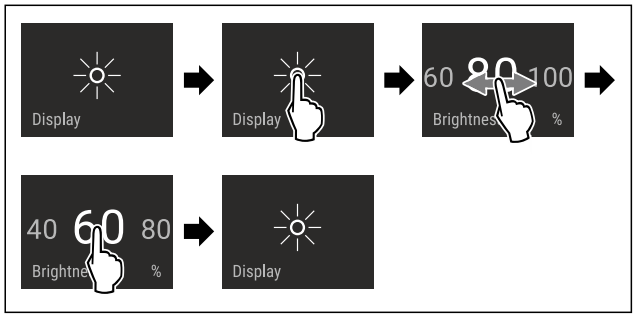

Fig. 145 Example illustration: Switch from 80 % to 60 %.

▶ Carry out action steps according to the illustration.
▷ The brightness is set.

WiFi

Use this function to connect your appliance to WiFi. You can then operate it via the SmartDevice app on a mobile device. You can also use this function to disconnect or reset the WiFi connection.

More information on the SmartDevice: (see 2.3 SmartDevice)

Note
The SmartDevice function is not available in the following countries: Russia, Belarus, Kazakhstan.

Establishing the WiFi connection for the first time

Make sure that the following requirements are fulfilled:

❑ You have installed the SmartDevice app (see apps.home.liebherr.com).
❑ Registration in the SmartDevice app is completed.

Fig. 146

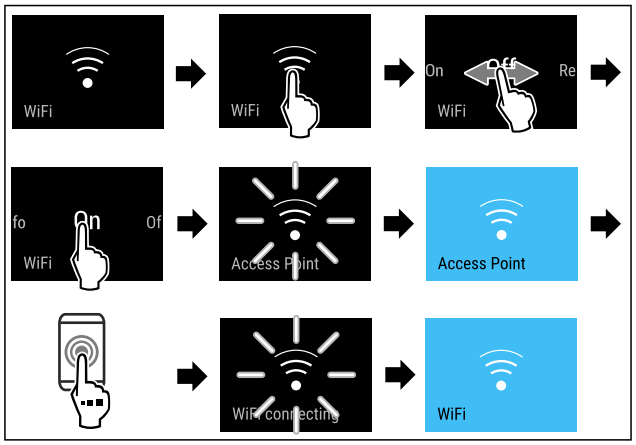

Fig. 147

▶ Carry out action steps according to the illustration.
▷ Connection is established.

Disconnecting from the WiFi

Fig. 148

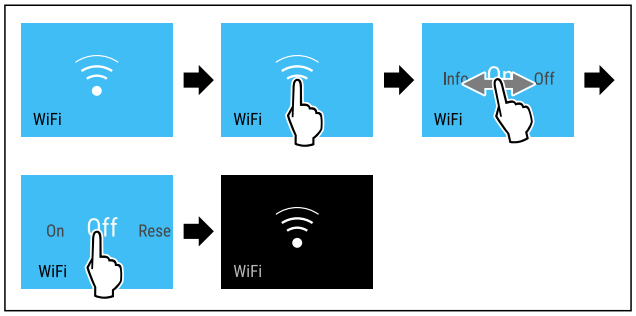

Fig. 149

▶ Carry out action steps according to the illustration.
▷ There is no connection.

Resetting the WiFi connection

Fig. 150

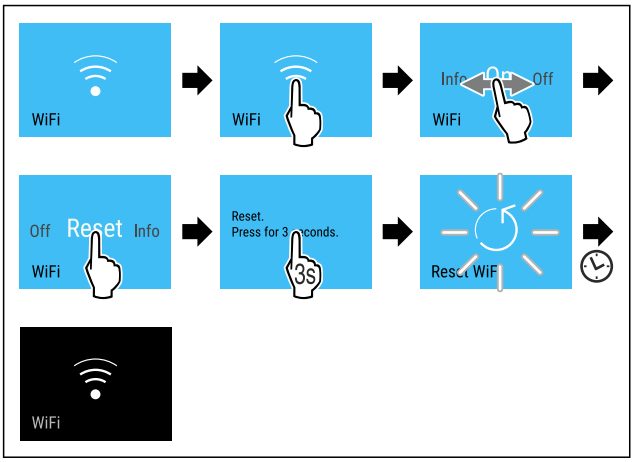

Fig. 151

▶ Carry out action steps according to the illustration.
▷ WiFi connection and other WiFi settings are reset to factory settings.

Showing information about the WiFi connection

Fig. 152

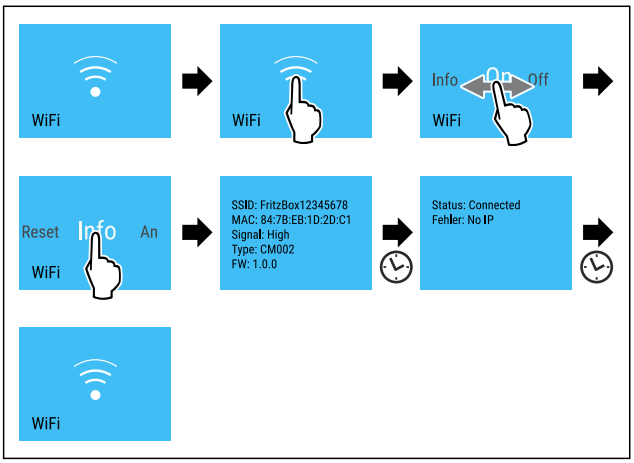

Fig. 153

▶ Carry out action steps according to the illustration.

Device information

Use this function to indicate the model name, index, serial number and service number of your device. You will need the device information when you contact customer service. (see 11.4 Customer Service)

This function also opens the Advanced menu. (see 4 Functionality of the Touch & Swipe display)

Indicating the device information

Fig. 154

Fig. 155

▶ Carry out action steps according to the illustration.
▷ Display indicates device information.

Software

Use this function to indicate the software version of your device.

Indicating the software version

Fig. 156

Fig. 157

▶ Carry out action steps according to the illustration.
▷ Display indicates software version.

Start defrosting cycle

Use this function to start the automatic defrosting cycle manually if it does not start automatically in the event of a fault.

Starting defrosting cycle

Fig. 158

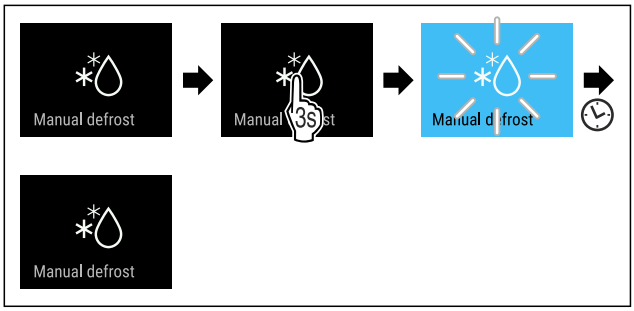

Fig. 159

▶ Carry out action steps according to the illustration.
▷ Defrosting cycle has started: Icon flashes until defrosting cycle is automatically completed.
▷ When defrosting cycle is finished: The device continues to run in normal mode.

Cancelling defrosting cycle

The defrosting cycle will be stopped automatically. However, you can also cancel the defrosting cycle at any time during the defrosting process:

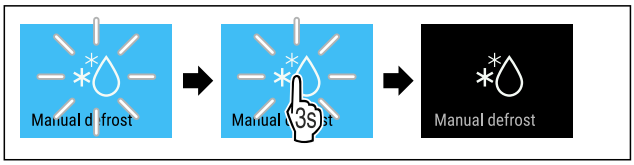

Fig. 160

▶ Carry out action steps according to the illustration.

▷ Defrosting cycle is cancelled.
▷ The device continues to run in normal mode.

Door alarm

Use this function to activate or deactivate the door alarm. The door alarm sounds if the door is open for too long. The door alarm is activated on delivery. You can set how long the door may be open before the door alarm sounds.

The following values can be set:

- 1 minute
- 2 minutes
- 3 minutes
- Off

Setting the door alarm

Fig. 161

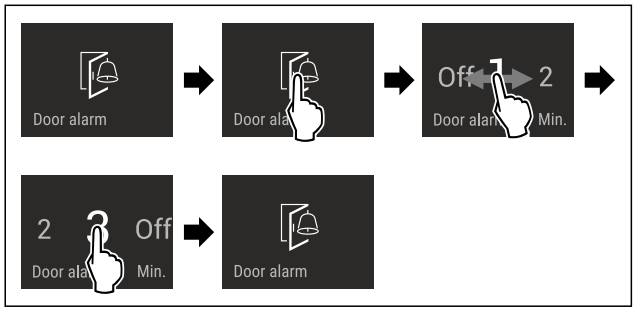

Fig. 162 Example illustration: Change door alarm from 1 minute to 3 minutes.

▶ Carry out action steps according to the illustration.
▷ The door alarm is set.

Deactivating the door alarm

Fig. 164

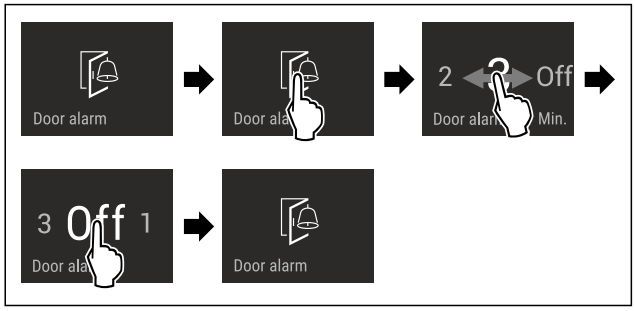

Fig. 165

▶ Carry out action steps according to the illustration.
▷ The door alarm is deactivated.

Demo mode

Demo mode is a special feature for dealers who want to demonstrate appliance features. If you activate demo mode, all refrigeration functions are deactivated.

If you switch on your appliance and “Demo” appears in the status display, then demo mode is already activated.

If you activate and then deactivate demo mode, the appliance will be reset to factory defaults. (see Resetting to factory settings)

Activating demo mode

Fig. 166

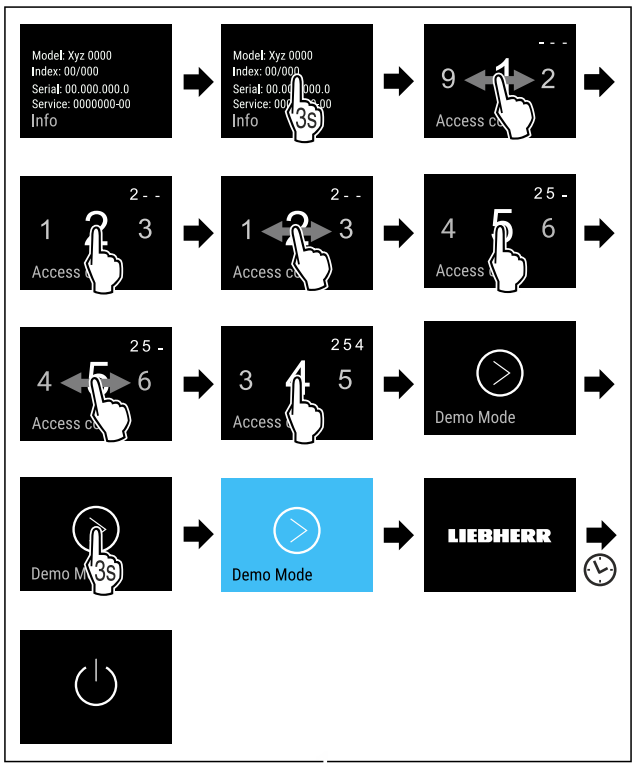

Fig. 167

▶ Carry out action steps according to the illustration.
▷ Demo mode is activated.
▷ Appliance is switched off.
▶ Switch on the appliance. (see 5.1 Switching on appliance (first use))
▷ “DEMO” appears in the status display.

Deactivating demo mode

Fig. 168

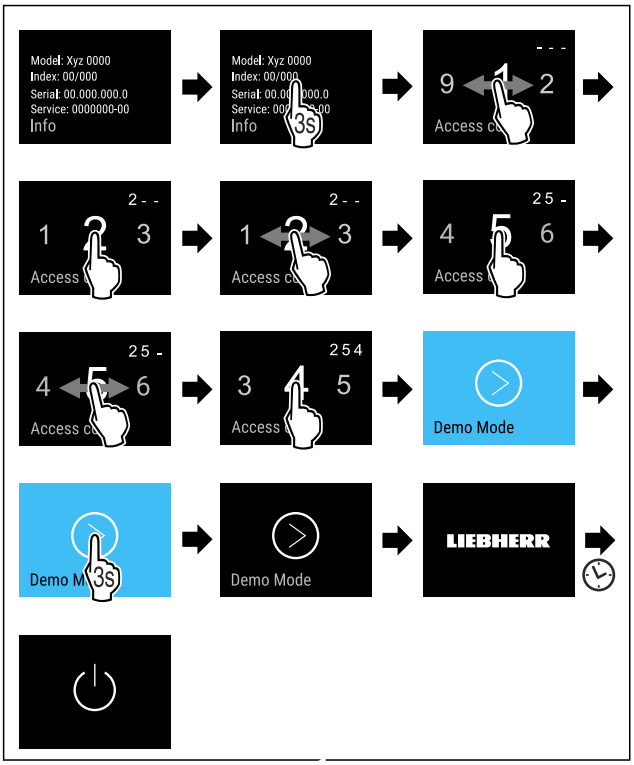

Fig. 169

▶ Carry out action steps according to the illustration.
▷ Demo mode is deactivated.
▷ Appliance is switched off.
▶ Switch on the appliance. (see 5.1 Switching on appliance (first use))
▷ Appliance is reset to factory settings.

Resetting to factory settings

Use this function to reset all settings to factory defaults. All settings you have made so far are reset to their original settings.

Performing a reset

Fig. 170

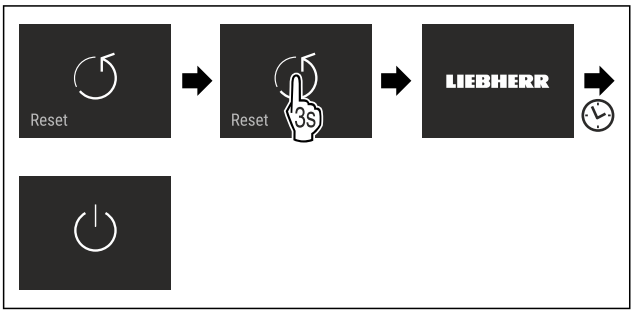

Fig. 171

▶ Carry out action steps according to the illustration.
▷ Device is reset.
▷ Device is switched off.
▶ Restart the device. (see 5.1 Switching on appliance (first use))

8.3 Messages

There are two categories of messages:

Category	Importance
Warning	Warnings appear in the event of a door alarm or malfunction. Simple warnings can be cancelled by yourself. In the event of serious malfunctions, you must contact customer service. (see 11.4 Customer Service)
Reminder	Reminders remind you of general processes. You can carry out these operations to end the message.

8.3.1 Overview of warnings

Behaviour of the appliance in the event of warnings:
- Warning appears in red on the display.
- The alarm tone sounds at an ever-increasing volume.
- The interior lighting pulsates for some warnings.

Message	Cause	Exit the message
Close the door. **Door alarm**	The message appears if the door is open for too long.	Carry out action steps. (see Door alarm)
Power failure **Power outage alarm**	The message appears if the freezing temperature has risen due to a power failure.	
Temperature alarm **Temperature alarm**	The message appears if the freezing temperature does not correspond to the set temperature.	Carry out action steps. (see Temperature alarm)
Error **Error**	The message appears if there is an appliance error. A component of the appliance has a fault.	Carry out action steps. (see Error)
WiFi Error **WLAN error**	The message appears if the appliance could not be connected to the WLAN. (see Establishing the WiFi connection for the first time) The message only appears during the initial setup.	Carry out action steps. (see WLAN error)

8.3.2 Ending warnings

Door alarm

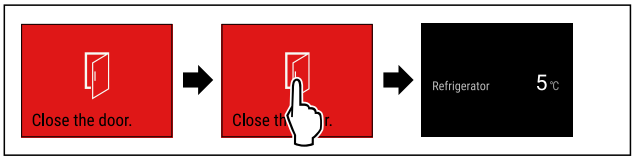

Fig. 172 Example illustration

▶ Carry out action steps according to the illustration.

-or-

▶ Close the door.

▷ The display returns to the status indicator.
▷ The appliance cools more vigorously, which means that the temperature shown on the display may be higher than the actual temperature inside the appliance.
▷ Appliance noises can be louder.

You can set how long the door may be open before the door alarm sounds. (see Setting the door alarm)

Power outage alarm

When the power failure has ended, the appliance will automatically cool down to the previously set target temperature without you having to confirm the message. However, for the message to disappear from the display, you must confirm it.

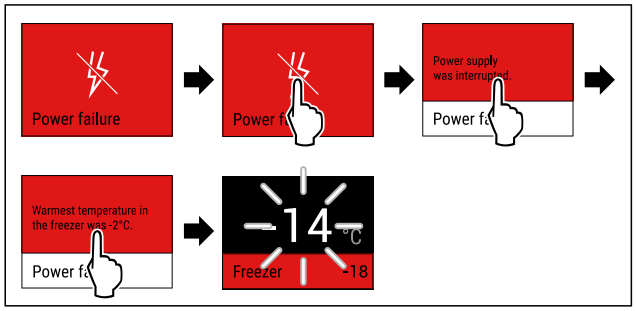

Fig. 173 Example illustration

▶ Briefly touch the display.
▷ Display shows information about the warning.
▶ Briefly touch the display.
▷ Warmest freezing temperature is displayed.
▷ If the freezing temperature was below -9 °C: Food can still be consumed.
If the freezing temperature has risen above -9 °C:
▶ Check the food.
▶ Briefly touch the display.
▷ The display returns to the status indicator: Current temperature and target temperature are displayed.

Temperature alarm

Temperature differences can be caused by:

- You have put in warm, fresh food.
- Too much warm air has got in while you were sorting out the freezer or removing items.
- There has been a longer power failure.
- The appliance is faulty.

▶ Eliminate causes.
▷ The appliance cools to the target temperature set previously.

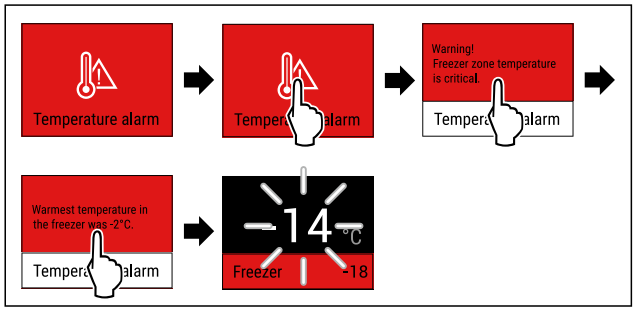

Fig. 174 Example illustration

▶ Briefly touch the display.
▷ Display shows information about the warning.
▶ Briefly touch the display.
▷ Warmest freezing temperature is displayed.
▷ If the freezing temperature was below -9 °C: Food can still be consumed.
If the freezing temperature has risen above -9 °C:
▶ Check the food.
▶ Briefly touch the display.
▷ The display returns to the status indicator: Current temperature and target temperature are displayed.

Error

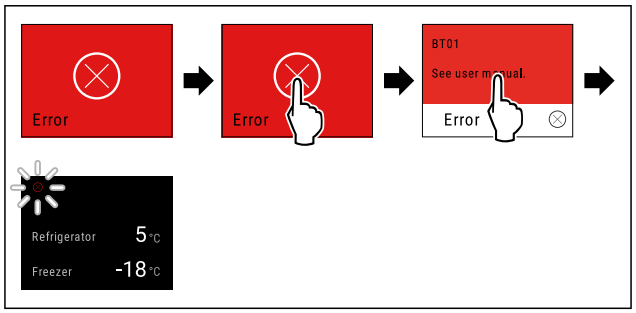

Fig. 175 Example illustration

▶ Briefly touch the display.
▷ Error code is displayed.
▶ Note the error code.
▶ Briefly touch the display.
▷ The display returns to the status indicator.
▶ Contact Customer Service. (see 11.4 Customer Service)

WLAN error

▶ Check WLAN connection.
▶ Reconnect the appliance to the WLAN. (see WiFi)

8.3.3 Overview of reminders

Behaviour of the appliance during reminders:

- Reminder appears yellow on the display.
- Alarm tone sounds.
- The interior lighting pulsates for some reminders.

The following reminders can be deactivated (see Deactivating the reminder) :

- Replace the FreshAir activated carbon filter

Message	Cause	Exit the message
No water **Check the water connection**	The message appears if the IceMaker is activated but the IceMaker is not being supplied with water via the fixed water connection.	Carry out action steps. (see Check the water connection)
No Drawer **Insert the IceMaker drawer**	The message appears if the IceMaker is activated but the IceMaker drawer is open.	Carry out action steps. (see Insert the IceMaker drawer)
FreshAir filter **Replace the FreshAir activated carbon filter**	The message appears when the FreshAir activated carbon filter needs to be replaced.	Carry out action steps. (see Replace the FreshAir activated carbon filter)

8.3.4 Ending reminders

Check the water connection

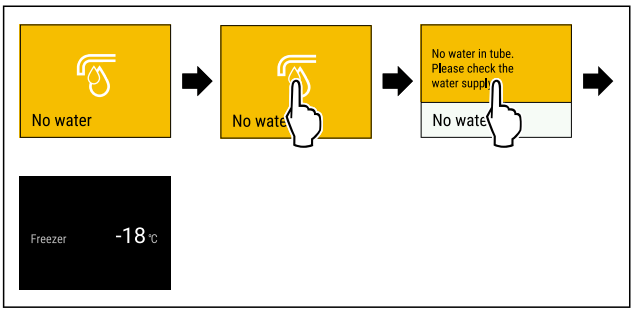

Fig. 176 Example illustration

▶ Briefly touch the display
▷ Display shows reminder information.
▶ Briefly touch the display
▶ Check the water connection.

-or-

▶ Deactivate IceMaker. (see Deactivating the IceMaker and MaxIce)

If water connection is checked and IceMaker is activated:

▶ Clean the IceMaker. (see 10.8.4 Cleaning the IceMaker)
▷ IceMaker produces ice cubes.

Insert the IceMaker drawer

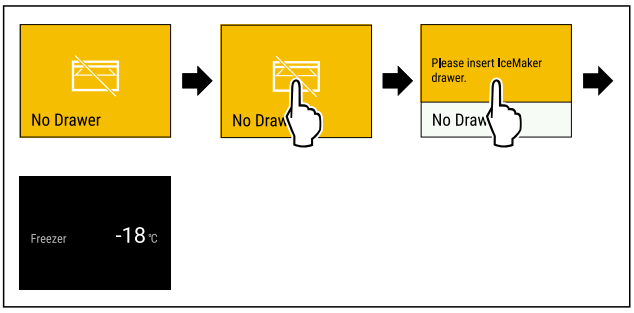

Fig. 177 Example illustration

▶ Briefly touch the display.
▷ Display shows reminder information.
▶ Briefly touch the display.
▶ Insert the IceMaker drawer.

-or-

▶ Deactivate IceMaker. (see IceMaker / MaxIce)

▷ If IceMaker drawer is inserted and IceMaker is activated: IceMaker produces ice cubes.

Replace the FreshAir activated carbon filter

Liebherr recommends: Replace the FreshAir activated carbon filter every 6 months.

Note
FreshAir activated charcoal filters can be purchased from the Liebherr-Hausgeräte store at go.liebherr.com/47wtc4.

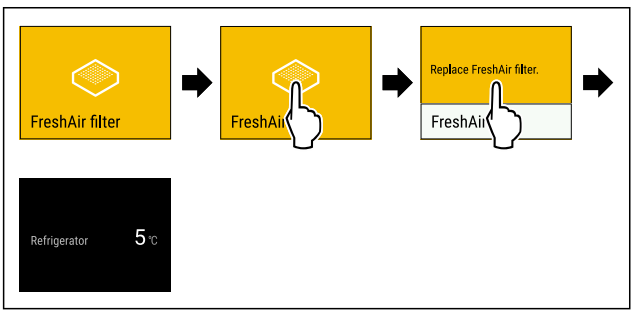

Fig. 178 Example illustration

▶ Briefly touch the display.
▷ Display shows reminder information.

▶ Briefly touch the display.
▶ Replace the activated carbon filter. (see 10.1 FreshAir carbon filter)
▷ Activated carbon filter ensures optimum air quality in the cooling unit.
▷ Reminder appears again after 6 months.

If you no longer wish to receive this reminder, you can deactivate it. (see Deactivating the reminder)

9 Features

9.1 Door rack

Door racks are suitable for storing drinks and food. You can move door racks for your own individual use and take them apart for cleaning. However, Liebherr recommends using the door racks in the position in the door as delivered from the factory.

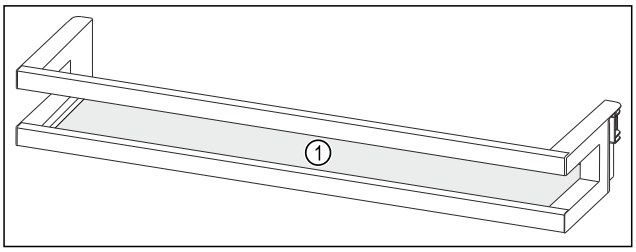

Fig. 179 Example illustration, Door rack

(1) Shelf

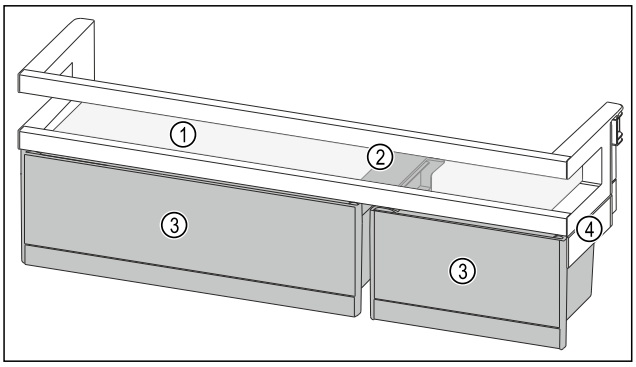

Fig. 180 Example illustration, Door racks with VarioBoxes

(1) Shelf
(2) Holding part for VarioBoxes
(3) VarioBoxes
(4) Side part

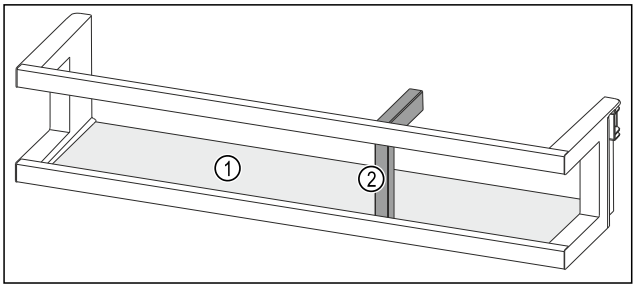

Fig. 181 Example illustration, Door rack with bottle holder

(1) Shelf
(2) Bottle holder

The following table shows examples of what can be stored in each door rack.

Door rack	Food
Door rack (see Fig. 179)	Butter, cheese, tinned food, tubes

Door rack	Food
Door rack with bottle holder (see Fig. 181)	Bottles The sliding bottle holder secures the bottles in the door rack.
Door rack with VarioBoxes (see Fig. 180)	small food items

9.1.1 Removing VarioBoxes

Either one or both VarioBoxes can be used. If you want to store particularly tall bottles in the door rack under the door rack with VarioBoxes, you can remove one or both VarioBoxes.

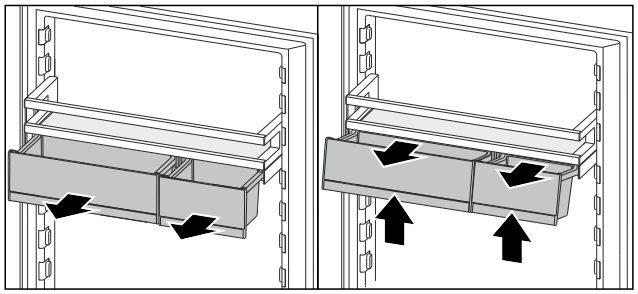

Fig. 182

▶ Pull out VarioBox to the end stop.
▶ Lift VarioBoxes out forwards.
▶ Take VarioBox out forwards.

9.1.2 Removing the door rack

Ensure that the following requirements are met:

❑ VarioBoxes have been removed. (see 9.1.1 Removing VarioBoxes)

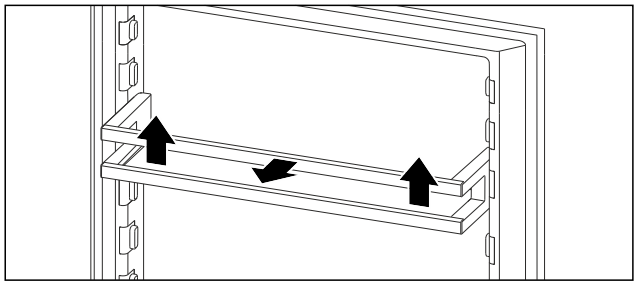

Fig. 183 Example illustration

▶ Push the door rack upwards.
▶ Pull the door rack forward.

9.1.3 Inserting the door rack

CAUTION

Risk of injury and damage to the appliance due to incorrectly stored food or objects!
If you place food or objects on the bottom glass shelf, the door may not close properly. This could cause the door racks to break, food or objects to fall out and cause injury.
▶ Keep the front area of the bottom glass shelf clear.

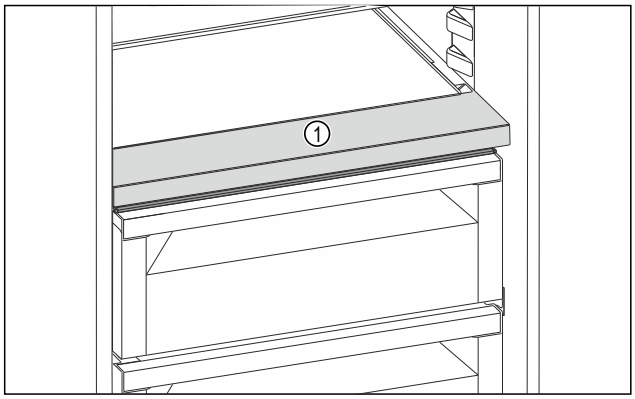

Fig. 184 Example illustration

(1) Front area

Ensure that the following requirements are met:

❑ VarioBoxes have been removed. (see 9.1.1 Removing VarioBoxes)

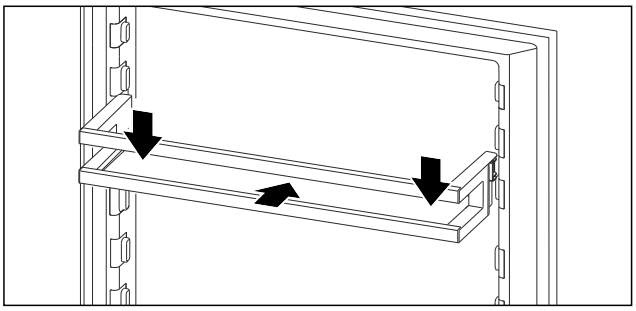

Fig. 185 Example illustration

▶ Slide in the door rack.
▶ Press the door rack down.

9.1.4 Inserting VarioBoxes

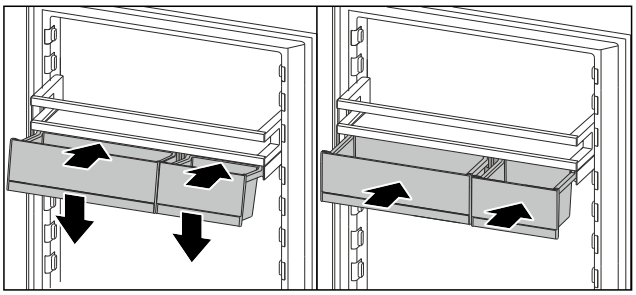

Fig. 186

▶ Place VarioBoxes at an angle on the rib of the door rack.
▶ Lower VarioBoxes.
▶ Push in the VarioBoxes.

9.1.5 Converting VarioBoxes

Ensure that the following requirements are met:

❑ VarioBoxs have been removed. (see 9.1.1 Removing VarioBoxes)
❑ Door rack has been removed. (see 9.1.2 Removing the door rack)

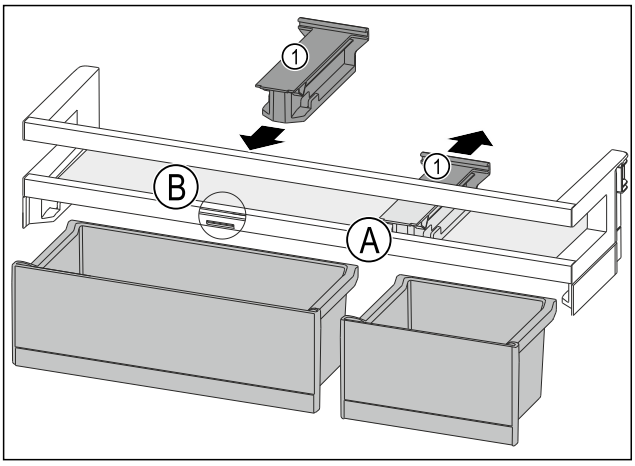

Fig. 187

▶ Take off the holding part *Fig. 187 (1)* in position *Fig. 187 (A)* backwards.
▶ Insert the holding part *Fig. 187 (1)* in position *Fig. 187 (B)*.
▶ Insert the door rack. (see 9.1.3 Inserting the door rack)

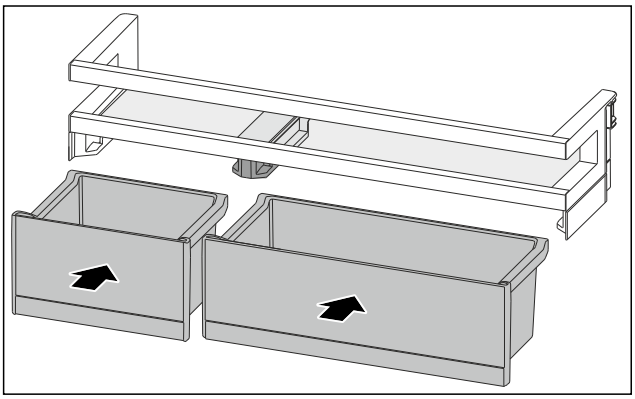

Fig. 188

▶ Insert the VarioBoxes in reverse order. (see Fig. 188)

9.2 Shelves

There are different storage areas depending on the type of appliance:

- Single-piece shelf
- Divisible shelf
- Variable bottle rack (see 9.3 Adjustable bottle shelf)

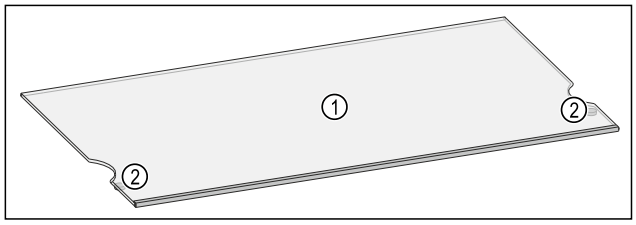

Fig. 189 Example illustration, shelf

(1) Shelf **(2)** Drawer stop

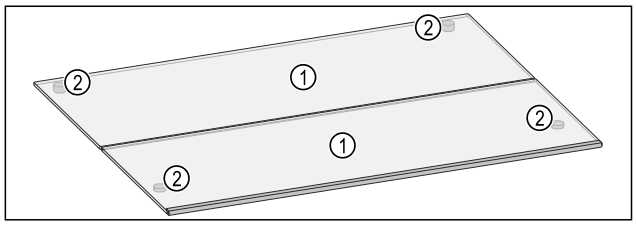

Fig. 190 Example illustration, divisible shelf

(1) Shelf **(2)** Drawer stop

9.2.1 Using the shelves in the fridge section

The shelves can either be adjusted in height, or removed completely or for cleaning.

Ensure that the following requirements are met:

❑ Shelves are empty.

Removing the shelf

The shelves are secured against accidental pulling out by means of drawer stops.

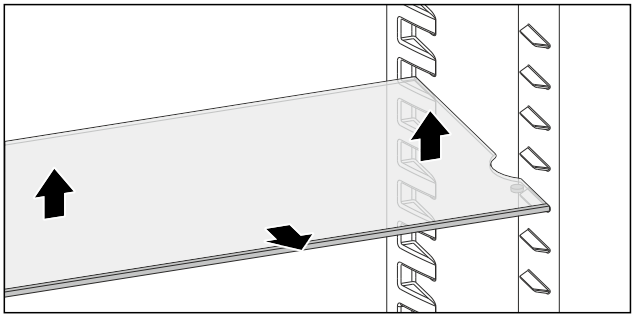

Fig. 191

▶ Raise the shelf.
▶ Pull out the shelf forwards.

-or-

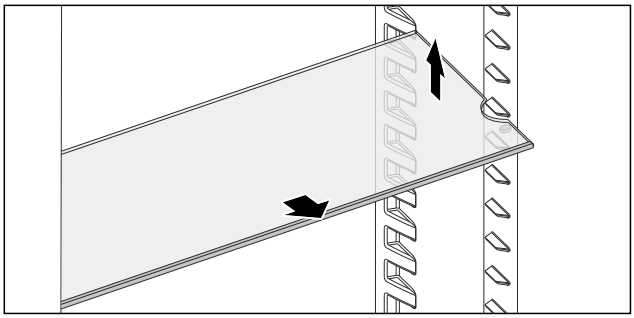

Fig. 192

▶ Easier removal: Tilt the shelf and pull it out forwards.

▷ Shelves have been removed.
▷ The shelves can be positioned at a different height.

Inserting the shelf

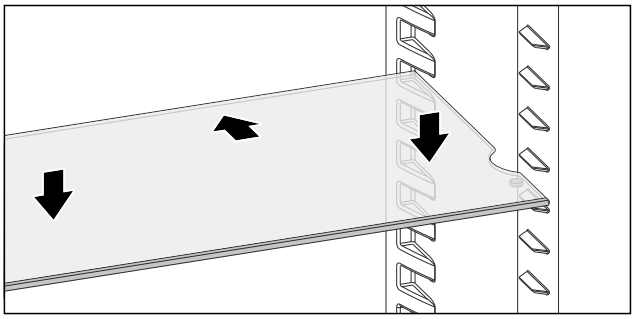

Fig. 193

When the drawer stop points downwards:

▶ Pull the shelf out as far as it will go.
▶ Lower the shelf.

-or-

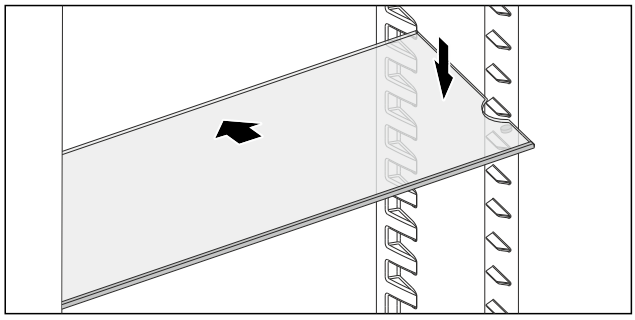

Fig. 194

▶ Slide the shelf in at an angle and lower it.

▷ The drawer stops are located behind the front support surface.

9.2.2 Using modular shelves

The divisible shelf can be pushed together in its factory-set position, adjusted in height, or removed for cleaning.

Ensure that the following requirements are met:

❑ Shelves are empty.

Pushing the divisible shelf together

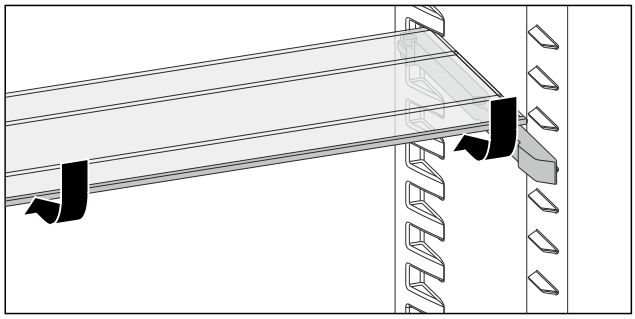

Fig. 195

▶ Slide the front shelf into place as shown in the illustration.

▷ The divisible shelf is pushed together.

▷ There is space for taller items on the shelf below.

Using both divisible shelves

▶ Grasp the pull-out shelf with one hand and pull it forwards.

▷ The trim strip is at the front.

▷ The drawer stops point downwards.

Adjusting the height of the divisible shelves

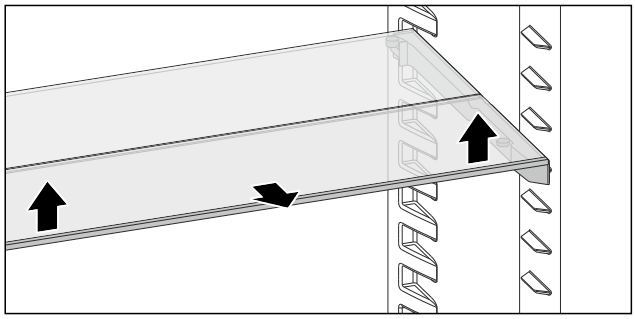

Fig. 196

▶ Lift the front shelf forwards.

▶ Pull out the front shelf forwards.

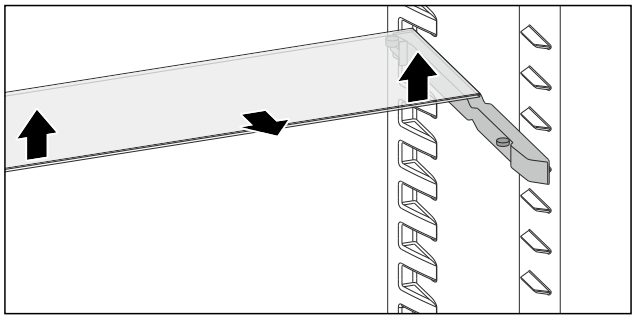

Fig. 197

▶ Repeat these steps for the rear shelf as well.

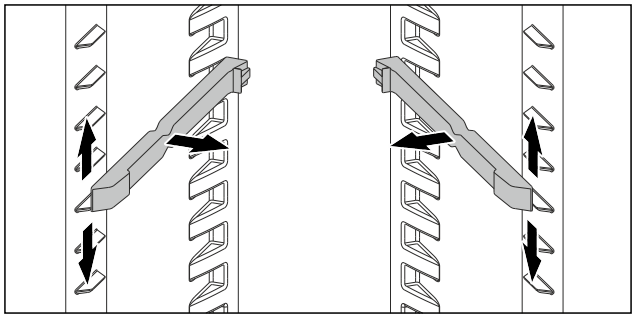

Fig. 198

▶ Pull out the support rails.

▶ Insert the support rails at the desired height.

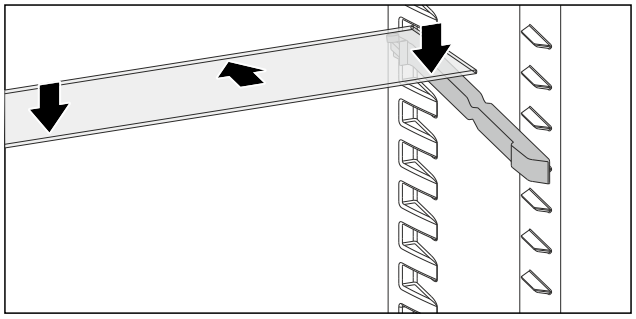

Fig. 199

▶ Push the storage shelf, with the high drawer stops, all the way in.

▶ Lower the shelf.

▷ The drawer stops are located behind the rear support surface.

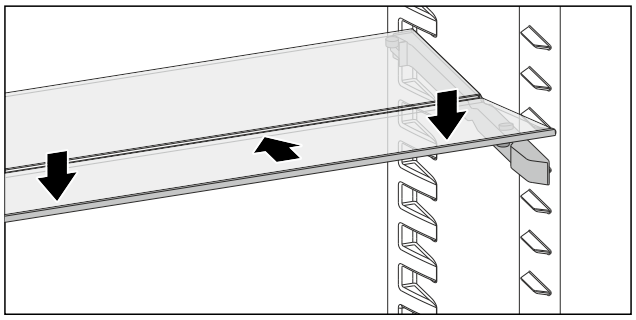

Fig. 200

▶ Repeat these steps for the front shelf as well.

Removing the divisible shelf

The divisible shelves can be removed by moving them into position. (see Adjusting the height of the divisible shelves)

9.3 Adjustable bottle shelf

Either the glass shelf or the variable bottle rack can be used in the bottom section of the refrigerator. The glass shelf is inserted at delivery.

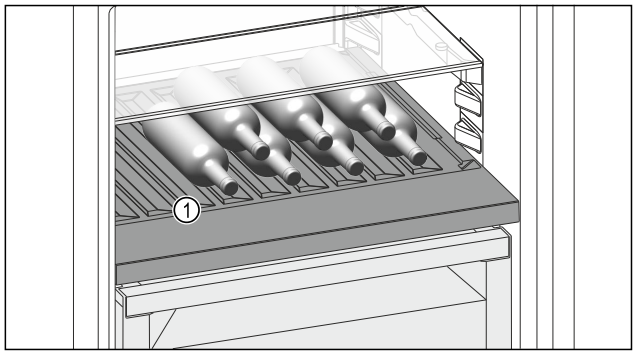

Fig. 201 Example illustration
(1) Variable bottle rack

9.3.1 Using the variable bottle rack

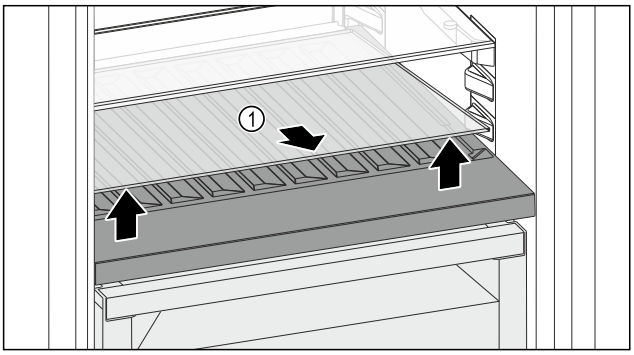

Fig. 202
▶ Lift the glass shelf *Fig. 202 (1)* at the front and remove.
▶ Store the glass shelf *Fig. 202 (1)* in a safe place outside the appliance.
▶ Insert the glass shelf *(2)* under the variable bottle rack.

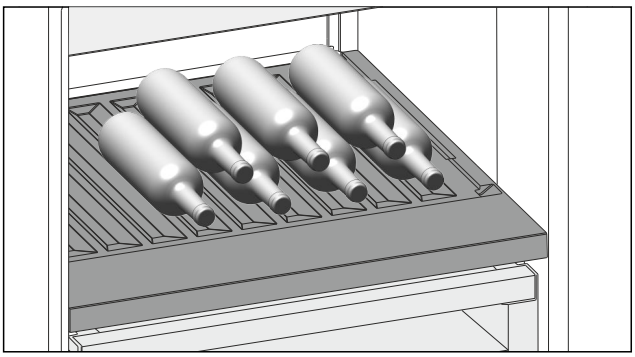

Fig. 203 Example illustration
▶ Place bottles in the back row with their bases against the back wall. (see Fig. 203)

Note
When the bottles protrude over the variable bottle rack at the front:
▶ Set the lower door rack one position higher.

9.3.2 Using the glass shelf

Ensure that the following requirements are met:
❑ Bottles have been removed.
❑ Variable bottle rack has been cleaned.
(see 10.5 Removing / inserting the variable bottle rack)
(see 10.8.3 Clean the components)

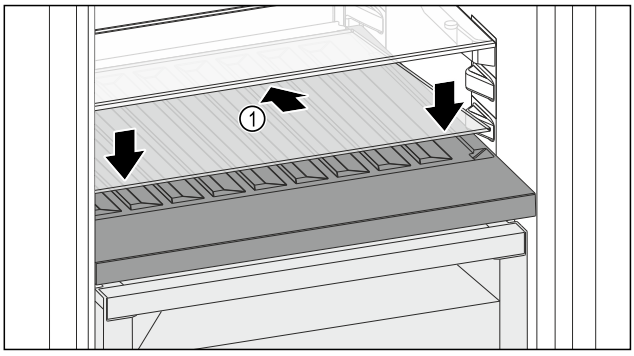

Fig. 204
▶ Place the glass shelf *Fig. 204 (1)* at an angle, sloping it downwards and backwards.
▶ Lower the glass shelf *Fig. 204 (1)* at the front.

9.4 Drawers

You can remove the drawers for cleaning.

You can remove the drawers to use VarioSpace.

The way to remove/insert the drawers varies depending on the pull-out system. Your appliance can contain various pull-out systems.

Note
The energy consumption increases and the cooling power goes down if ventilation is not sufficient.
▶ Leave the bottom drawer inside the appliance.
▶ Always keep the inside vents at the rear wall clear.

9.4.1 Drawer on appliance base or glass shelf

The drawer runs directly on the appliance base or on a glass shelf. There are no rails.

When you remove the drawers, you can use the glass shelves below them as storage shelves.

Removing drawer

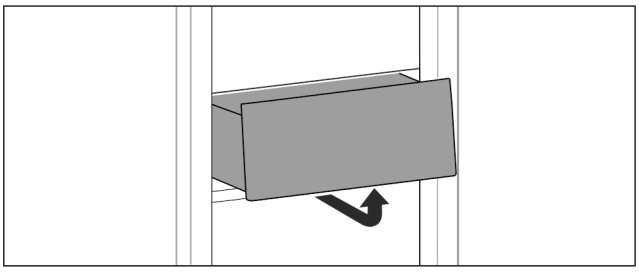

Fig. 205
▶ Remove drawer as shown in the illustration.

Inserting drawer

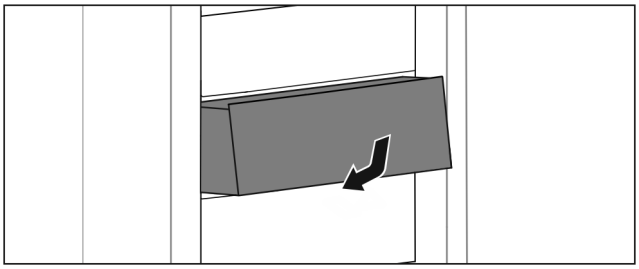

Fig. 206
▶ Insert drawer as shown in the illustration.

9.4.2 Drawer on telescopic rails

The drawer runs on extendible rails (telescopic rails). There are fully extendible telescopic rails and telescopic rails with partial pull-out. Drawers which are fully extendible can be pulled out fully from the appliance. Drawers with partial pull-out cannot be removed fully from the appliance. The system in your appliance depends on the type of appliance.

Fully extendible

If you have fully extendible rails, there is a clamp located at the back on the left and right of the rail.

Removing drawer

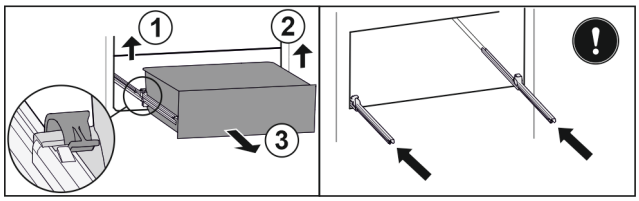

Fig. 207

▶ Pull out drawer as far as it will go.
▶ Lift left clamp and simultaneously pull drawer forwards on the left. *Fig. 207 (1)*
▶ Lift right clamp and simultaneously pull drawer forwards on the right. *Fig. 207 (2)*
▶ Remove drawer to the front. *Fig. 207 (3)*
▶ Slide rails in.

Inserting drawer

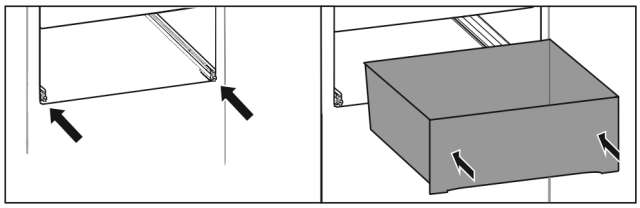

Fig. 208

▶ Slide rails in.
▶ Place drawer on rails.
▶ Slide in drawer to the back.
▷ Drawer latches in audibly at the back.

Partial pull-out freezer compartment

Note
If the magnet on the top drawer in the freezer compartment is damaged or removed, the door sensors will malfunction.
▶ Do not damage or remove the magnet.

Removing drawer

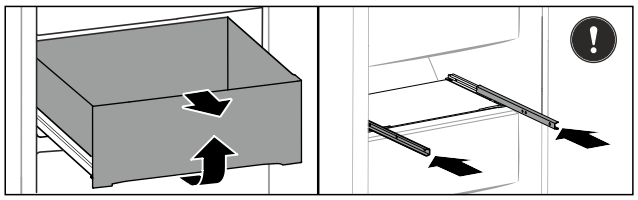

Fig. 209

If the drawer is in the top freezer:
▶ Pull out drawer as far as it will go.
▶ Raise the drawer forwards.
▶ Remove the drawer forwards.
▶ Slide rails in.
-or-

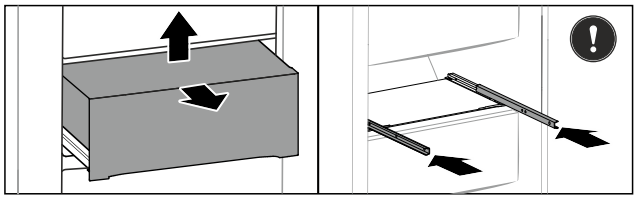

Fig. 210

If the drawer is in the middle part of the freezer compartment:
▶ Pull out drawer half-way.

▶ Lift the drawer from the bottom rear.
▶ Remove the drawer forwards.
▶ Slide rails in.

Inserting drawer

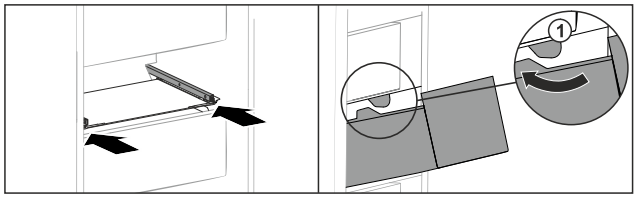

Fig. 211

▶ Slide rails in.
▶ Guide drawer around the stoppers *Fig. 211 (1)*.
▶ Place drawer on rails.
▶ Slide in drawer to the back.

9.5 Compartment lid for Fruit & Vegetable Safe

The compartment lid ensures constant levels of humidity.

The compartment lid is directly on the drawer and can be covered by shelves or additional drawers.

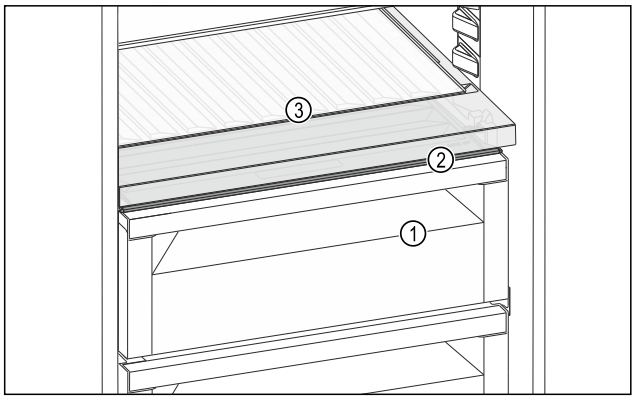

Fig. 212 Example illustration, compartment lid for Fruit & Vegetable Safe

(1) Fruit & Vegetable Safe
(2) Compartment lid for Fruit & Vegetable Safe
(3) Variable bottle rack

*** Depending on model and options**

9.5.1 Reducing the air humidity in the drawer

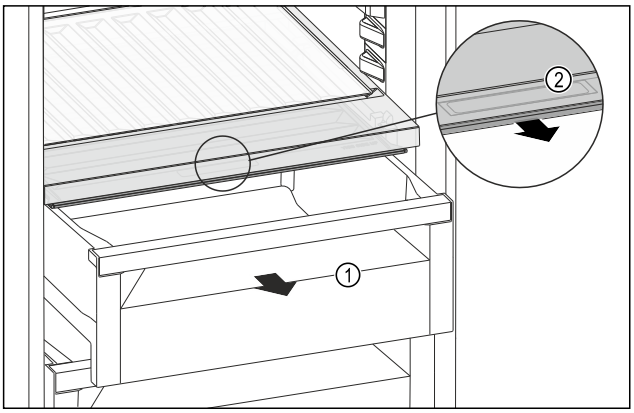

Fig. 213

▶ Pull out the drawer *Fig. 213 (1)*.
▶ Grasp the recessed grip *Fig. 213 (2)* on the compartment lid and pull the compartment lid forwards at the same time.
▷ When the drawer is closed, there is a small gap between the compartment lid and the drawer.

9.5.2 Increasing the air humidity in the drawer

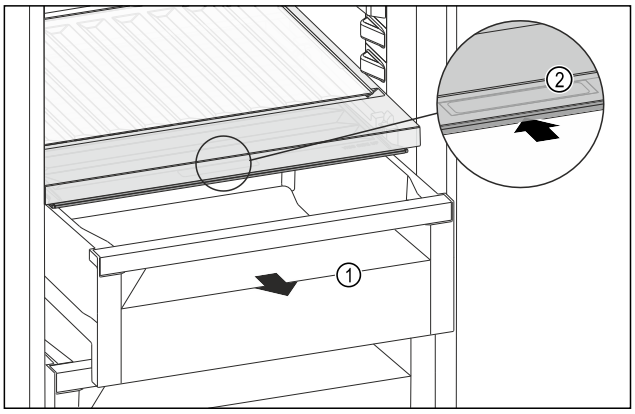

Fig. 214

▶ Pull out the drawer *Fig. 214 (1)*.
▶ Grasp the recessed grip *Fig. 214 (2)* on the compartment lid and push the compartment lid backwards at the same time.
▷ When the drawer is closed, the compartment lid seals with the drawer.

9.5.3 Using Fruit & Vegetable Safe as Meat & Dairy Safe

You can use the Fruit & Vegetable Safe as Meat & Dairy Safe. To do this, you must reduce the humidity in the drawer. (see 9.5.1 Reducing the air humidity in the drawer)

9.6 Glass shelves

You can remove the glass shelves under the drawers for cleaning.

You can remove the glass shelves under the drawers to use VarioSpace.

9.6.1 Removing / inserting the glass shelf

Make sure that the following requirements are fulfilled:

❑ Glass shelf under the drawer: The drawer has been removed. (see 9.4 Drawers)

Removing glass shelf

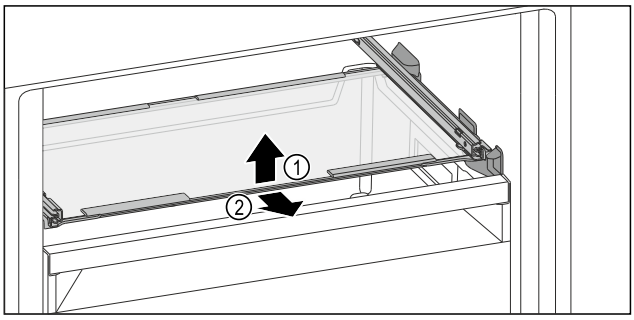

Fig. 215 Example illustration, glass shelf

▶ Lift the glass shelf forwards.
▶ Remove the glass shelf forwards.

Inserting glass shelf

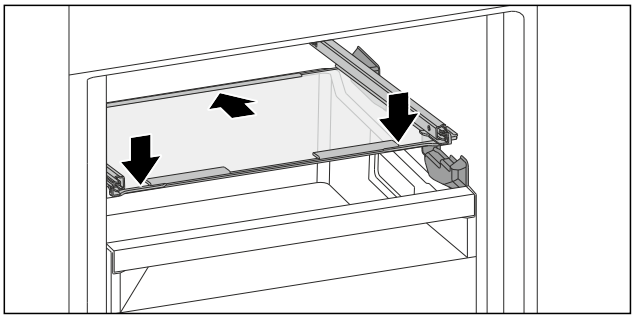

Fig. 216 Example illustration, glass shelf

▶ Place the glass shelf at an angle behind the stoppers.
▶ Lower glass shelf.
▶ Slide in glass shelf to the back.

9.7 IceMaker

The IceMaker will produce ice cubes for household use only.

Ensure that the following conditions are met:

- The IceMaker is clean. (see 10 Maintenance)
- IceMaker drawer is cleaned.
- IceMaker drawer is fully inserted.

9.7.1 Producing ice cubes

The volume depends on the freezing temperature. The colder the temperature, the more ice cubes the system can produce in a certain time period.

After the IceMaker is turned on for the first time, it can take up to 24 hours for the first ice cubes to be made.

▶ Activate the IceMaker function.
▶ Producing many ice cubes: Activate the MaxIce function.
▶ To make a high number of ice cubes: Move the divider in the IceMaker drawer or remove it completely.
▶ Distribute the ice cubes evenly in the drawer to increase the capacity.
▶ Closing the drawer: IceMaker starts making ice cubes again automatically.

Note
When a certain level is reached in the IceMaker drawer, it stops producing ice cubes. The IceMaker does not fill the drawer all the way to the top.

9.7.2 Using the drawer with the IceMaker deactivated

If you deactivate the IceMaker, then you can use the entire IceMaker drawer as a freezer drawer.

▶ Deactivate IceMaker. (see Deactivating the IceMaker and MaxIce)

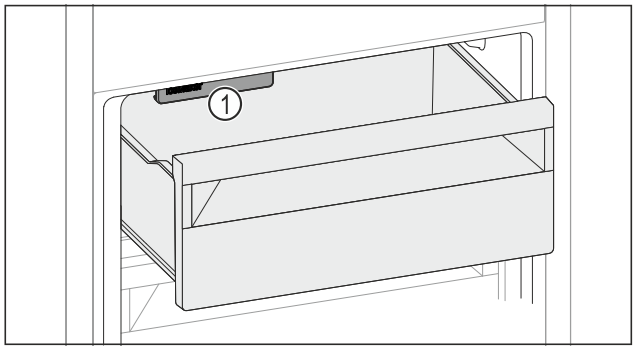

Fig. 217

▶ Place food in drawer.
If you put food in the left side of the drawer:
▶ Watch out for the IceMaker *Fig. 217 (1)*.

9.8 VarioSpace

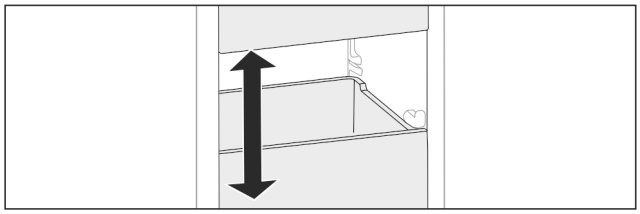

Fig. 218

You can remove drawers and glass panels from your appliance. This provides more room for large food items such as poultry, joints of meat, large game, and tall baked products. You can then freeze these items whole for later preparation.

▶ Note the weight limits on the drawers and glass panels (see 11.1 Technical specifications) .

9.9 Butter dish

9.9.1 Opening/closing the butter dish

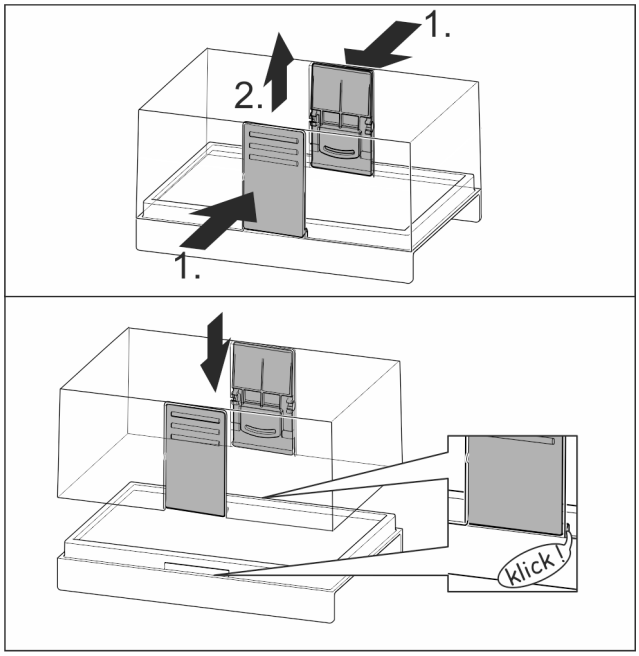

Fig. 219

9.9.2 Dismantling the butter dish

You can take the butter dish apart for cleaning.

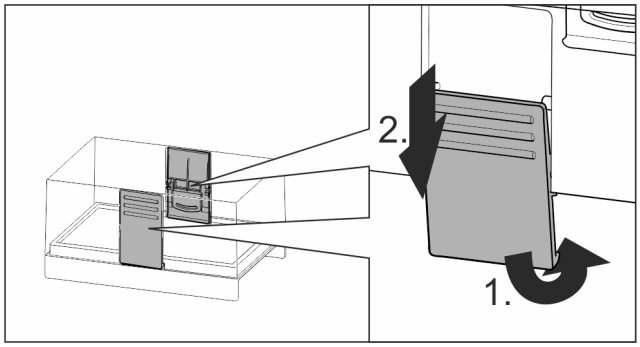

Fig. 220

▶ Disassembling the butter dish.

9.10 Egg rack

You can pull out and turn the egg rack. You can use both sides of the egg rack so you can label specifics like the purchase date.

9.10.1 Using the egg rack

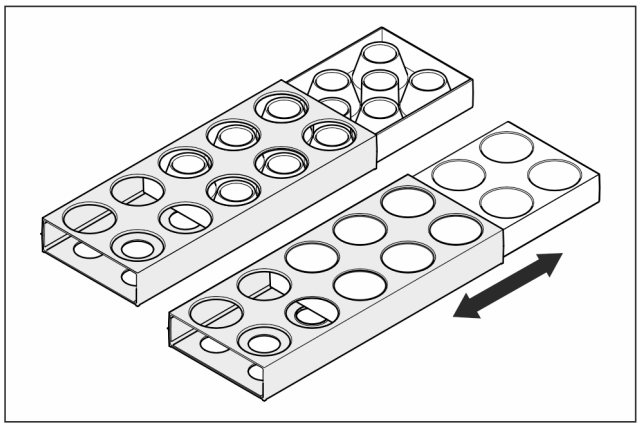

Fig. 221

▶ Top layer: for storing hen eggs.
▶ Bottom layer: for storing quail eggs.

9.11 Bottle holder

9.11.1 Using the bottle holder

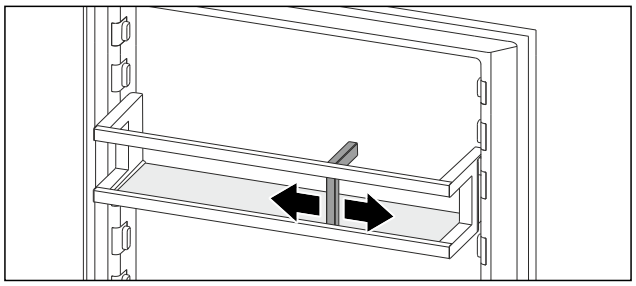

Fig. 222

▶ Push the bottle holder onto the bottles.
▷ The bottles are prevented from falling over.

9.12 FlexSystem

9.12.1 Using the FlexSystem

The FlexSystem helps you store and organise your food in a clear and flexible way. It lets you clearly divide your food into fruit, vegetables or by use-by dates, for example.

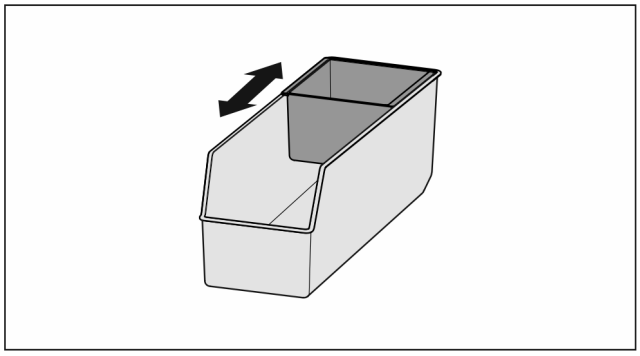

Fig. 223

▶ Move the inner shell.

9.12.2 Removing the FlexSystem

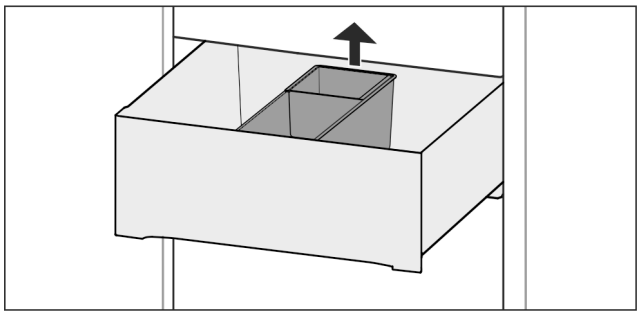

Fig. 224

▶ Lift the FlexSystem from the back.
▶ Pull up and out.

9.12.3 Inserting the FlexSystem

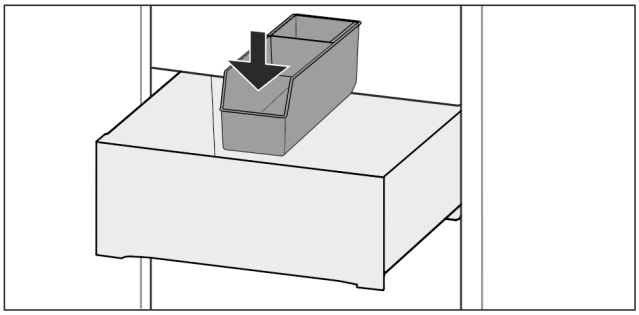

Fig. 225

▶ Insert the FlexSystem front-first.
▶ Lower the rear part.

9.12.4 Disassembling the FlexSystem

You can take the FlexSystem apart for cleaning.

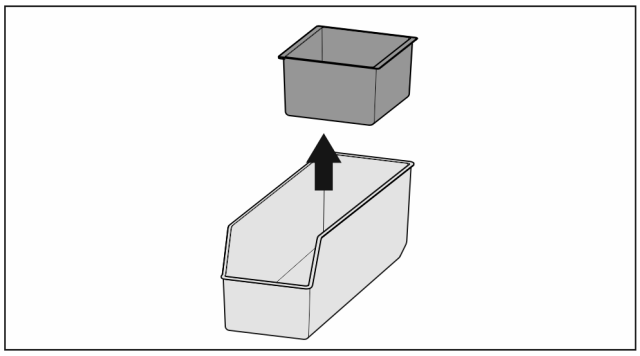

Fig. 226

▶ Disassembling the FlexSystem

9.13 Flexible ice compartment divider

The IceMaker's ice cube drawer has a flexible ice compartment divider. This allows you to store larger quantities of ice cubes or additional food items as needed. You can move or remove the ice compartment divider.

9.13.1 Moving in the flexible ice compartment divider

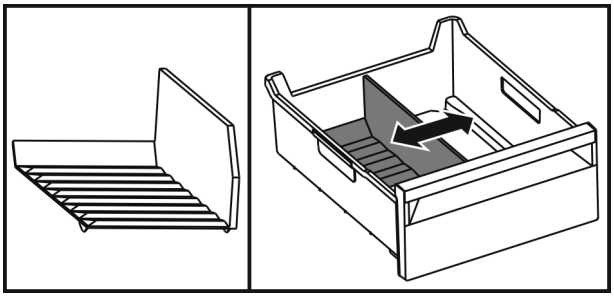

Fig. 227 Example illustration of the ice compartment divider

▶ Move the ice compartment divider to the desired position.

9.13.2 Removing the flexible ice compartment divider

Make sure that the following requirements are fulfilled:

❑ Ice cube drawer is removed. (see 9.4 Drawers)

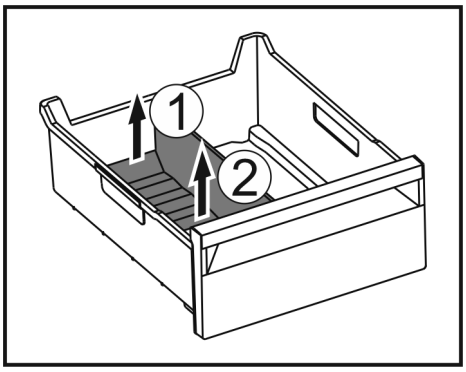

Fig. 228

▶ Lift the rear part of the ice compartment divider. *Fig. 228 (1)*
▶ Remove the ice compartment divider upwards. *Fig. 228 (2)*

9.13.3 Putting in the flexible ice compartment divider

Make sure that the following requirements are fulfilled:

❑ Ice cube drawer is removed. (see 9.4 Drawers)

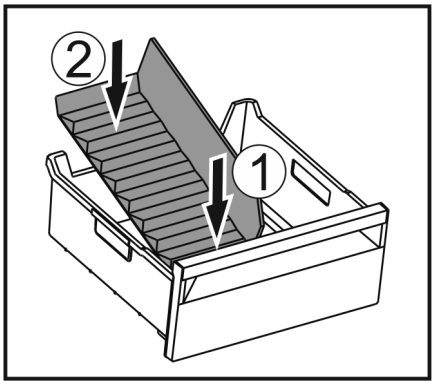

Fig. 229

▶ Insert the front part of the ice compartment divider. *Fig. 229 (1)*
▶ Lower the rear part of the ice compartment divider to the drawer bottom. *Fig. 229 (2)*

10 Maintenance

10.1 FreshAir carbon filter

The FreshAir carbon filter is in the compartment above the fan.

It guarantees the best air quality.

❑ Replace the carbon filter every 6 months.
When the reminder is set, a message on the display prompts you to change it.
❑ The carbon filter can be disposed of with the regular household waste.

Note
FreshAir activated charcoal filters can be purchased from the Liebherr-Hausgeräte store at go.liebherr.com/47wtc4.

10.1.1 Removing the FreshAir carbon filter

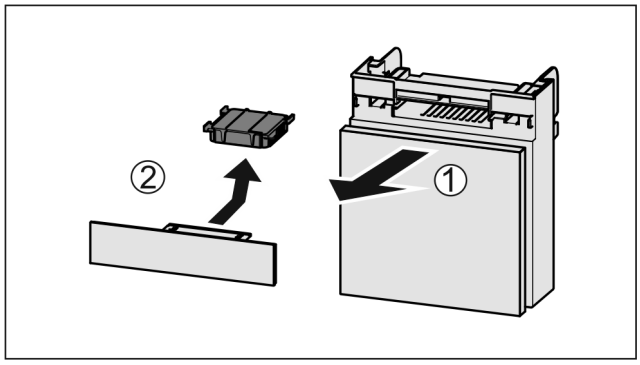

Fig. 230
▶ Pull out the compartment *Fig. 230 (1)*.
▶ Remove the carbon filter *Fig. 230 (2)*.

10.1.2 Inserting the FreshAir carbon filter

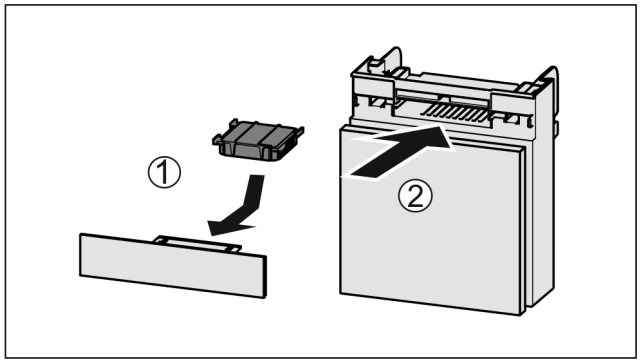

Fig. 231
▶ Insert the carbon filter as shown in the diagram *Fig. 231 (1)*.
▷ The carbon filter clicks into place.
If the carbon filter is pointing downwards:
▶ Push the compartment in *Fig. 231 (2)*.
▷ The carbon filter is now ready for use.

10.2 Dismantling the door rack

It is possible to dismantle some of the door racks if you want to clean them or install or remove spare parts.

10.2.1 Dismantling the door rack

Ensure that the following requirements are met:

❑ Door rack has been removed. (see 9.1.2 Removing the door rack)

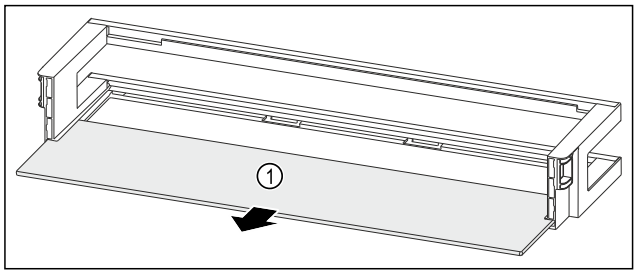

Fig. 232 Door rack with shelf
▶ Remove the shelf *Fig. 232 (1)*.

10.2.2 Dismantling the door rack with Vario-Boxes

Ensure that the following requirements are met:

❑ Door rack has been removed. (see 9.1.2 Removing the door rack)

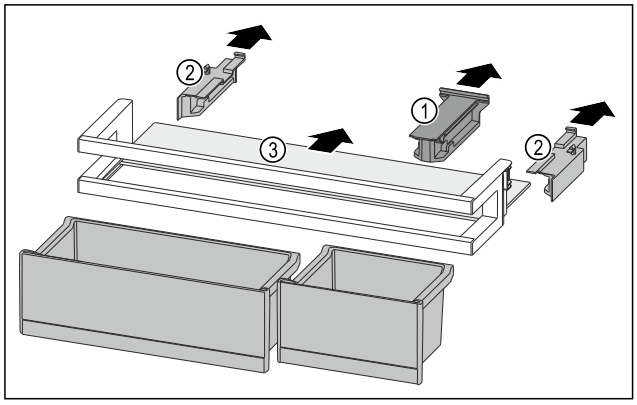

Fig. 233
▶ Remove the VarioBoxes. (see 9.1.1 Removing VarioBoxes)
▶ Pull off the holding part *Fig. 233 (1)*.
▶ Pull off the side parts *Fig. 233 (2)*.
▶ Remove the shelf *Fig. 233 (3)*.

10.2.3 Dismantling the door rack with bottle holder

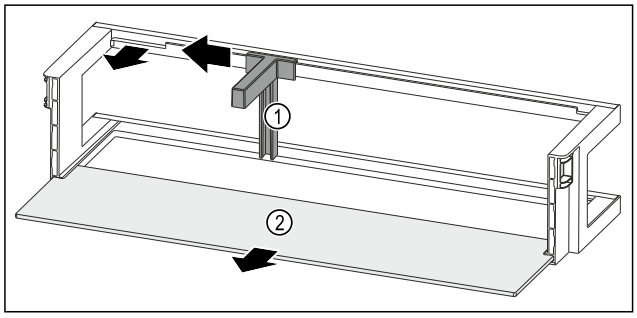

Fig. 234 Door rack with bottle holder and shelf
▶ Slide the bottle holder *Fig. 234 (1)* to the side as far as the recess.
▶ Remove the bottle holder *Fig. 234 (1)*.
▶ Remove the shelf *Fig. 234 (2)*.

10.3 Assembling the door rack

10.3.1 Assembling the door rack

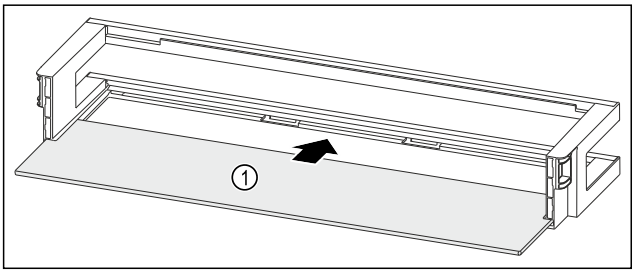

Fig. 235 Door rack with shelf

▶ Push the shelf *Fig. 235 (1)* into the side recesses.

10.3.2 Assembling the door rack with Vario-Boxes

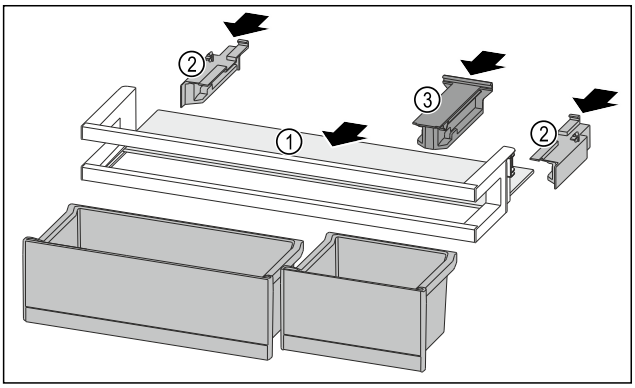

Fig. 236

▶ Push the shelf *Fig. 236 (1)* into the side recesses.
▶ Insert the side parts *Fig. 236 (2)*.
▶ Insert the holding part *Fig. 236 (3)*.
▶ Insert the VarioBoxes. (see 9.1.4 Inserting VarioBoxes)

10.3.3 Assembling the door rack with bottle holder

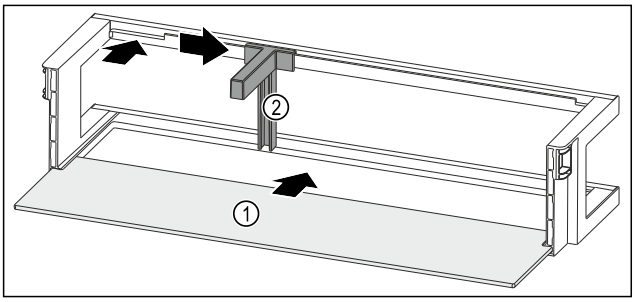

Fig. 237 Door rack with shelf

▶ Push the shelf *Fig. 237 (1)* into the side recesses.
▶ Insert the bottle holder *Fig. 237 (2)* in the recess.
▶ Push the bottle holder *Fig. 237 (2)* to the desired position to the side.

10.4 Disassembling / assembling pull-out systems

10.4.1 Notes on disassembly

You can disassemble some of the pull-out systems for cleaning. Your appliance can contain a variety of pull-out systems.

The following pull-out systems can be disassembled or cannot be disassembled:

Pull-out system	can be disassembled / cannot be disassembled
Drawer on appliance base or glass shelf	cannot be disassembled
Fully extendible	cannot be disassembled
Freezer section partial pull-out	can be disassembled (see Partial pull-out freezer compartment)

10.4.2 Drawer on telescopic rails

Partial pull-out freezer compartment

Disassembling pull-out system

Make sure the following prerequisites are met:

❑ Drawer has been removed.
❑ Glass shelf has been removed. (see 9.6 Glass shelves)

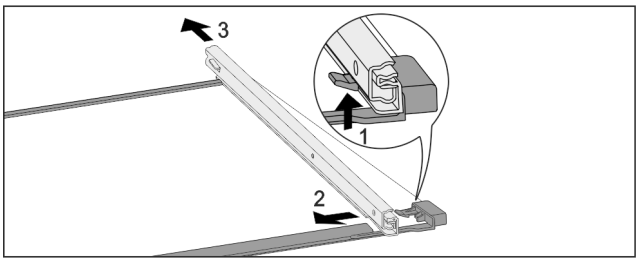

Fig. 238 Glass shelf with rails

▶ Push up front click-in hooks. *Fig. 238 (1)*
▶ Move the pull-out rails to the side *Fig. 238 (2)* and to the rear *Fig. 238 (3)*.

Installing pull-out system

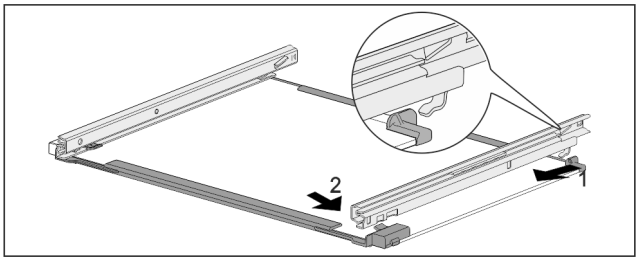

Fig. 239 Glass shelf with rails

▶ Hook in rail at the back. *Fig. 239 (1)*
▶ Hook in rail at the front. *Fig. 239 (2)*

10.5 Removing / inserting the variable bottle rack

The variable bottle rack can be removed for cleaning.

10.5.1 Removing the variable bottle rack

Ensure that the following requirements are met:

❑ Bottles have been removed.
❑ Glass shelf has been removed. (see 9.3.1 Using the variable bottle rack)

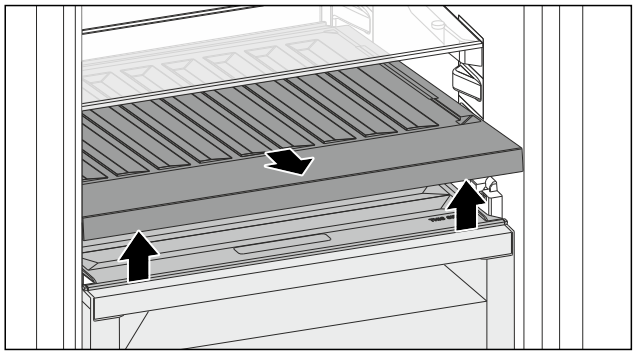

Fig. 240

▶ Lift the variable bottle rack at the front and pull it out.
▷ The compartment lid is visible.

Note
Liebherr recommends:
Do not place any items on the compartment lid below.

10.5.2 Inserting the variable bottle rack

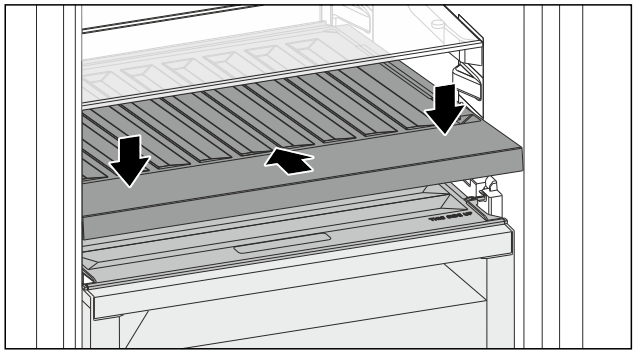

Fig. 241

▶ Push the variable bottle rack in to the end stop and press it down.
▷ The connectors at the back of the variable bottle rack are connected via automated processes.
▷ LED lights up.
▶ Insert the glass shelf. (see 9.3.2 Using the glass shelf)
-or-
▶ Use the variable bottle rack for bottles.

10.6 Compartment lid for Fruit & Vegetable Safe

You can remove the compartment lid for cleaning.

10.6.1 Removing the compartment lid

Ensure that the following requirements are met:

❑ The glass shelf directly above the variable bottle rack has been removed.
❑ The variable bottle rack has been removed.
❑ The drawer directly below the compartment lid has been removed. (see 9.4 Drawers)

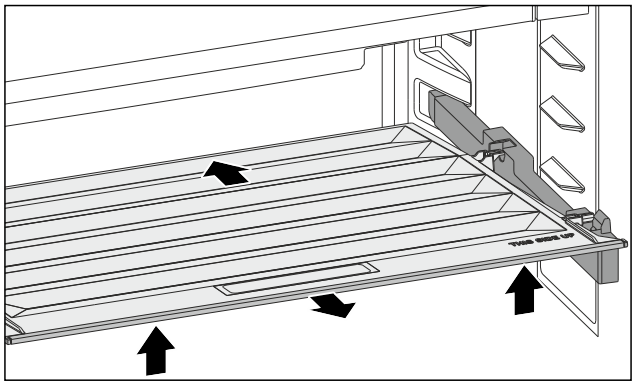

Fig. 242

▶ Push the compartment lid backwards.
▶ Lift the compartment lid forwards.
▶ Remove the compartment lid forwards and upwards at an angle.

10.6.2 Inserting the compartment lid

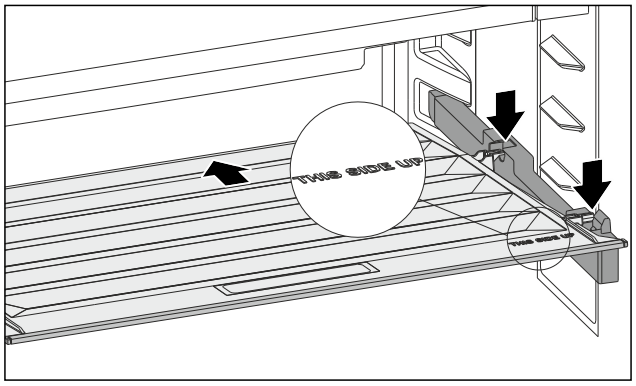

Fig. 243

If the THIS SIDE UP lettering is at the top:

▶ Insert the rear retaining parts into the relevant rear openings.
▶ Push the compartment lid backwards.
▶ Lower the compartment lid forwards and engage the front retaining parts into the openings.
▶ Move the compartment lid into the required position.

10.7 Defrosting the appliance

10.7.1 Defrosting the fridge compartment

Defrosting is performed automatically. The water from the thawing process drains through the outlet and evaporates.

▶ Clean the drain opening at regular intervals. (see 10.8 Cleaning the appliance)

10.7.2 Defrosting the freezer compartment with NoFrost

Defrosting is performed automatically with the NoFrost system. The moisture is deposited on the evaporator, is periodically defrosted and evaporates.

The appliance does not have to be defrosted.

10.8 Cleaning the appliance

10.8.1 Preparation

WARNING
Danger of electric shock!
▶ Remove the refrigerator connector or interrupt the power supply.

WARNING
Danger of fire!
▶ Do not damage the refrigeration circuit.

▶ Empty the appliance.
▶ Unplug the mains plug.
-or-
▶ Activate the CleaningMode. (see CleaningMode)

10.8.2 Cleaning the interior

NOTICE
Improper cleaning!
Damage to the appliance.
▶ Only use soft cleaning cloths and ph-neutral all-purpose cleaners.
▶ Do not uses abrasive sponges or steel wool which may cause scratches.
▶ Do not use any sharp or abrasive cleaning agents, nor any that contain sand, chloride or acid.

▶ Plastic surfaces: clean by hand with a soft clean cloth, lukewarm water and a little detergent.
▶ Metal surfaces: clean by hand with a soft clean cloth, lukewarm water and a little detergent.
▶ Drain hole: remove deposits using a thin item (for example a cotton bud).

10.8.3 Clean the components

NOTICE
Improper cleaning!
Damage to the appliance.
▶ Only use soft cleaning cloths and ph-neutral all-purpose cleaners.
▶ Do not uses abrasive sponges or steel wool which may cause scratches.
▶ Do not use any sharp or abrasive cleaning agents, nor any that contain sand, chloride or acid.

Clean with a soft, clean cloth, lukewarm water and some detergent:

- Shelf
- Dividing shelf
- Compartment lid for Fruit & Vegetable Safe
- Drawer
  Please note: Do not remove the magnet on the drawer. The magnet ensures the functionality of the IceMaker.
- Flexible ice compartment divider in the IceMaker's ice cube drawer
- Adjustable bottle shelf
- FlexSystem

Clean with a damp cloth:

- Retractable rails
  Please note: The grease in the tracks is used for lubrication and must not be removed!

Wash in the dishwasher up to 60 °C:

- Door rack
- VarioBox
- Bottle rack
- Holder of the dividing shelf
- Egg rack
- Butter dish
- Ice cube scoop

▶ To disassemble components: see the relevant section.
▶ Clean the components.

10.8.4 Cleaning the IceMaker

There are various options for cleaning the IceMaker.

Cleaning is required in the following cases:

❑ Initial operation
❑ With mains connection:
  If out of use for more than 5 days.

Ensure that the following conditions are met:

❑ IceMaker drawer is emptied.
❑ IceMaker drawer is in place.
❑ The IceMaker is activated.

First use or after a long period of non-use

Clean the IceMaker with the TubeClean function.
▶ Put an empty 1.5 l vessel (max. height 10 cm) in the drawer under the IceMaker.
▶ Activate the TubeClean function.
▷ The rinse process is prepared (max. 60 min.): Symbol flashes.
▷ Water pipes are rinsed: Symbol flashes.
▷ Rinsing process is complete: Function turns off automatically.
▶ Remove the IceMaker drawer and remove the container.
▶ Clean the IceMaker drawer with warm water and a little detergent.
▶ Push the IceMaker drawer in.
▷ The system starts making ice cubes automatically.

Without a water filter
▶ Dispose of any ice cubes that were made 24 hours after the first ice cubes.

If cleaning is required

Clean the IceMaker by hand.
▶ Remove the IceMaker drawer and clean with warm water and a little detergent.
▶ Push the IceMaker drawer in.
▷ The system starts making ice cubes automatically.

10.8.5 After cleaning

▶ Wipe the appliance and the components dry.
▶ Connect and switch on the appliance.
▶ Activate SuperFrost (see 8.2 Appliance functions) .
  The temperature is cold enough:
▶ Place the food inside.
▶ Repeat cleaning regularly.

11 Customer help

11.1 Technical specifications

Temperature range	
Cooling	3 °C to 9 °C
BioFresh	0 °C to 3 °C
Freeze	-26 °C to -15 °C

Maximum ice cube quantity / 24 hours	
Freezer compartment	see type plate under “Freezing capacity .../ 24 h”

Maximum component capacity			
Features	Appliance width 550 mm (see installation instructions, appliance dimensions)	Appliance width 600 mm (see installation instructions, appliance dimensions)	Appliance width 700 mm (see installation instructions, appliance dimensions)
Drawer on glass shelf (see 9.4.1 Drawer on appliance base or glass shelf)	12 kg	15 kg	--
Freezer section partial pull-out (see 9.4.2 Drawer on telescopic rails)	12 kg	15 kg	--

Ice cube production with IceMaker	
Ice cube production / 24 hours	At a temperature of -18 °C: 1.2 kg of ice cubes
maximum ice cube production / 24 hours	With the MaxIce function on: 1.5 kg of ice cubes

Time required to reach various temperatures with VarioTemp		
Initial temperature	Target temperature	Time taken to reach target temperature
-18 °C	0 °C	> 8 hours
-18 °C	8 °C	> 12 hours
8 °C	14 °C	> 6 hours
14 °C	-18 °C	> 4 hours

Lighting	
Class[1]	Light source
This product contains one or more energy efficiency class G light sources.	LED

[1] *The appliance may contain light sources with different energy efficiency classes. The lowest energy efficiency class is indicated.*

For appliances with a WiFi connection:

Frequency specification	
Frequency band	2.4 GHz
Maximum radiated power	< 100 mW
Purpose of the wireless equipment	Integration in the local WiFi network for data communication

11.2 Operating noise

The appliance makes different noises when it is on.

- At **higher temperatures** the appliance uses less energy but works for longer. It is **quieter**.
- With **high cooling capacity**, food is cooled more quickly. The sound is **louder**.

  Examples:
  - Functions on (see 8.2 Appliance functions)
  - Fan running
  - Food recently added
  - High ambient temperature
  - Door open for a while

Noise	Possible cause	Type of noise
Bubbling and splashing	Coolant flowing into the cooling circuit.	Normal operating noise
Hissing	Coolant sprays into the cooling circuit.	Normal operating noise
Humming	The appliance is cooling. The volume depends on the cooling output.	Normal operating noise
Suction noises	Soft-closing door is being opened and closed.	Normal operating noise
Humming and rustling	The fan is running.	Normal operating noise
Clicking	Components are switched on and off.	Normal switching noise
Rattling or humming	Valves or flaps are working.	Normal switching noise

Noise	Possible cause	Type of noise	Lifting
Vibration	Improper installation	Defective noise	Check the installation. Level the appliance.
Rattling	Components, items inside the appliance	Defective noise	Secure components. Leave enough space between the items.

11.3 Technical fault

Your appliance is designed and built to ensure it works reliably and has a long service life. In the unlikely event that a fault occurs during operation, please check whether it is due to an operating error. If so, you will be charged for the callout and repair costs even if it falls within the warranty period.

You can fix the following faults yourself.

11.3.1 Appliance function

Defect	Cause	Remedy
The appliance is not working.	→ The appliance is not switched on.	▶ Switch the appliance on.
	→ The power plug is not properly plugged into the socket.	▶ Check the power plug.
	→ There is something wrong with the power outlet fuse.	▶ Check the fuse.
	→ Power cut	▶ Keep the appliance closed. ▶ Safeguarding food: Place cold packs on top of food or use another freezer if the power cut lasts longer. ▶ Do not re-freeze defrosted food,
	→ The IEC socket is not plugged into the appliance correctly.	▶ Check the IEC socket.
Temperature is not cold enough.	→ The appliance door is not closed properly.	▶ Close the appliance door.
	→ Not enough ventilation.	▶ Keep ventilation grille clear, and clean it.
	→ The ambient temperature is too high.	▶ Problem solution: (see 1.8 Climate classes)
	→ The appliance was opened too many times or for too long.	▶ Wait to see if the required temperature corrects itself. If not, contact Customer Service. (see 11.4 Customer Service)
	→ Too much fresh food was placed inside without SuperFrost.	▶ Solution: (see SuperFrost)
	→ The temperature is set incorrectly.	▶ Turn down the temperature and check after 24 hours.
	→ The appliance is too close to a heat source (oven, radiator, etc).	▶ Move the appliance or the heat source.
	→ The appliance was not correctly installed in the recess.	▶ Check if the appliance was installed correctly and that the door closes properly.
The temperature shown on the display is higher than the actual temperature in the appliance.	→ Appliance door was open for a long time and the door alarm was triggered automatically. This causes the appliance to cool more vigorously.	▶ Close appliance door.
The door seal is defective or needs to be replaced for another reason.	→ The door seal can be replaced. It can be replaced without the need for special tools.	▶ Contact Customer Service. (see 11.4 Customer Service)
The appliance builds up too much ice or condensation.	→ The door seal may have slipped out of its groove.	▶ Check that the door seal is well fitted in the groove.

11.3.2 Features

Defect	Cause	Remedy
You cannot activate the IceMaker.	→ The appliance and therefore the IceMaker are not connected.	▶ Connect the appliance (see the Installation Guide).
The IceMaker is not producing ice cubes.	→ The IceMaker is not on.	▶ Activate the IceMaker.
	→ The drawer of the IceMakers is not connected properly.	▶ Push the drawer in correctly.
	→ The water connection is not open.	▶ Open the water connection.

Defect	Cause	Remedy
The internal light does not come on.	→ The appliance is not switched on.	▶ Switch the appliance on.
	→ The door was open for longer than 15 minutes.	▶ Interior lighting switches off automatically after about 15 minutes when the door is open.
	→ The LED interior light is faulty or the lid is damaged.	▶ Contact Customer Service. (see 11.4 Customer Service)

11.4 Customer Service

First check whether you can rectify the fault yourself (see 11 Customer help) . If you cannot rectify the problem, contact Customer Service.

You can find the address in the enclosed brochure “Liebherr-Service” or at home.liebherr.com/service.

WARNING
Unprofessional repair!
Injuries.
- ▶ Have any repairs and action - not expressly specified - on the appliance and mains cable carried out by service personnel only. (see 10 Maintenance)
- ▶ A damaged mains cable may only be replaced by the manufacturer, the manufacturer’s Customer Service or a similarly qualified person.
- ▶ In the case of appliances with an IEC connector, the change may be made by the customer.

11.4.1 Contacting Customer Service

Make sure that the following appliance information is available:

- ❑ Appliance designation (model and index)
- ❑ Service no. (Service)
- ❑ Serial no. (S no.)

- ▶ Call up the appliance information via the display. (see Device information)

-or-

- ▶ Refer to the type plate for appliance information. (see 11.5 Model plate)

- ▶ Note down the appliance information.
- ▶ Notify customer service: Report errors and the appliance information.
- ▷ This will help us to provide you with a faster, more accurate service.
- ▶ Follow further instructions from Customer Service.

11.5 Model plate

The model plate is behind the drawers on the inside of the appliance.

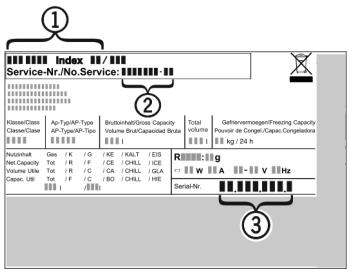

Fig. 244
(1) Appliance description
(2) Service no.
(3) Serial no.

- ▶ Note the data on the model plate.

12 Shutting down

- ▶ Empty the appliance.
- ▶ Deactivate IceMaker. (see Deactivating the IceMaker and MaxIce)
- ▶ Switch off appliance. (see Switching the appliance off and on)
- ▶ Pull the mains plug out of the socket.
- ▶ Remove the IEC socket if required: Pull the IEC socket out of the appliance plug and move it to the left and right at the same time.
- ▶ Clean appliance. (see 10.8 Cleaning the appliance)
- ▶ Leave the door open, so that no unpleasant odours arise.

13 Disposal

Ensure that the following requirements are met:

- ❑ Meaning of the symbols on the appliance: are familiar.
- ❑ Notes on disposal are familiar. (see 1.6 Information concerning disposal)

13.1 Preparing the appliance for disposal

- ▶ Shutting your appliance down. (see 12 Shutting down)

13.2 Disposing of the appliance in an environmentally friendly manner

WARNING
Risk of fire due to leaking refrigerant and oil!
The refrigerant inside the appliance is environmentally friendly, but flammable. The oil it contains is also flammable. Escaping refrigerant and oil can ignite in high concentrations and in contact with an external heat source.
- ▶ Do not damage the refrigerant circuit pipes or the compressor.

- ▶ Observe the notes on transporting the appliance. (see 3.6 Transporting the appliance)
- ▶ Remove the appliance without damaging it.
- ▶ Dispose of appliance according to specifications.

Scan QR Code and find digital operating and installation instructions.

home.liebherr.com

20260928 7088671-00

Liebherr-Hausgeräte GmbH
Memminger Straße 77-79
88416 Ochsenhausen
Deutschland