User Guide

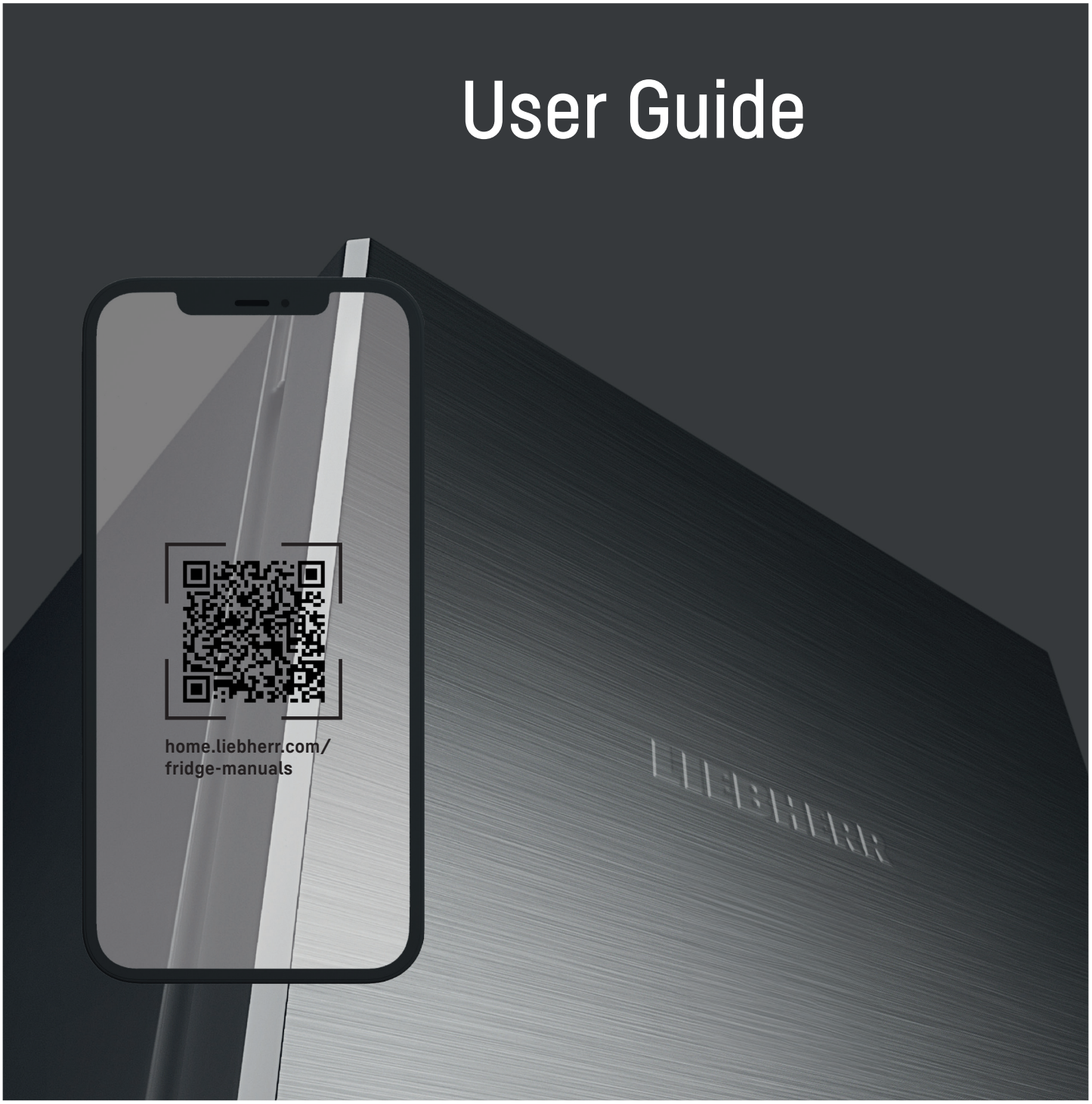

EN ORIGINAL OPERATOR'S MANUAL

LIEBHERR

Contents

1 General safety information ... 3
1.1 Intended use ... 3
1.2 Foreseeable erroneous use ... 3
1.3 User group ... 3
1.4 Warning notices – Risks for the user ... 3
1.5 Faults, damage and repairs ... 4
1.6 Information concerning disposal ... 4
1.7 Conformity ... 4
1.8 Climate classes ... 4
1.9 SVHC substances in accordance with the REACH Regulation ... 4
1.10 EPREL database ... 4
1.11 Open source licences ... 4
1.12 Spare parts ... 4
1.13 Warning levels ... 4

2 Appliance at a glance ... 5
2.1 Scope of delivery ... 5
2.2 Overview of the appliance and equipment ... 5

3 Setting up and connecting ... 5
3.1 Installation requirements ... 5
3.2 Appliance dimensions ... 6
3.3 Recess dimensions ... 6
3.4 Unit front ... 7
3.5 Transporting the appliance ... 7
3.6 Unpacking the appliance ... 8
3.7 Replacing the door hinge ... 8
3.8 Installing the appliance in the niche ... 12
3.9 Fitting the unit door ... 17
3.10 After installation ... 19
3.11 Connecting the appliance to the power supply ... 19
3.12 Disposing of packaging ... 19

4 Functionality of the display ... 19
4.1 Navigation by touchbutton and symbol explanation ... 19
4.2 Menus ... 20

5 Putting into operation ... 21
5.1 Switching on device (first use) ... 21

6 Storage ... 21
6.1 Information regarding storage ... 21
6.2 Fridge compartment ... 21
6.3 4-star freezer compartment* ... 22
6.4 Storage times ... 22

7 Saving energy ... 22

8 Controls ... 22
8.1 Operating controls and display elements ... 22
8.1.1 Temperature display/Status indicator ... 23
8.1.2 LED behaviour ... 23
8.1.3 Audible signals ... 23
8.2 Appliance functions ... 23
8.2.1 Notes on the appliance functions ... 23
Switching the appliance off and on ... 23
Temperature ... 23
SuperCool ... 24
SabbathMode ... 24
Input lock ... 25
Demo mode ... 25
Resetting to factory settings ... 25
8.3 Messages ... 26
8.3.1 Ending messages ... 26

9 Features ... 26
9.1 4-star freezer compartment* ... 26
9.2 Door rack ... 26
9.3 Shelves ... 27
9.4 Drawers ... 27
9.5 Bottle holder ... 28

10 Maintenance ... 28
10.1 FreshAir carbon filter* ... 28
10.2 Removing / inserting the bottle holder ... 28
10.3 Disassembling / assembling pull-out systems ... 29
10.4 Defrosting the appliance ... 29
10.5 Defrosting the freezer compartment manually* ... 29
10.6 Cleaning the appliance ... 29

11 Customer help ... 30
11.1 Technical specifications ... 30
11.2 Operating noise ... 30
11.3 Technical fault ... 30
11.4 Customer Service ... 31
11.5 Model plate ... 31

12 Shutting down ... 32

13 Disposal ... 32
13.1 Preparing the appliance for disposal ... 32
13.2 Disposing of the appliance in an environmentally friendly manner ... 32

The manufacturer is continually working on the further development of all types and models. Please be aware that we reserve the right to make changes to the shape, equipment and technology.

Symbol	Explanation
	Read instructions Please read the information in these instructions carefully to understand all of the benefits of your new appliance.
	Additional information on the Internet The digital manual with additional information and in other languages can be found via the QR code on the front of the manual or by entering the service number at **home.liebherr.com/fridge-manuals**. The service number can be found on the serial tag: *Fig.* Example illustration
	Check appliance Check all parts for transport damage. If you have any complaints, please contact your agent or customer service.
	Differences These instructions apply to a range of models, so differences are possible. Sections that apply to certain models only are marked with an asterisk (*).

*** Depending on model and options**

Symbol	Explanation
▷ ▶	**Instructions and results** Instructions are marked with a ▶. Results are marked with a ▷.
▶	**Videos** Videos about the appliances are available on the YouTube channels of Liebherr-Hausgeräte.

Open source licences:

The appliance contains software components that use open source licences. Information on the open source licences used can be found here: **home.liebherr.com/open-source-licences**

This user information applies to the following appliances:

(D)UR..	36..
UR..	37..

1 General safety information

Keep this user information in a safe place so that you can refer to it at any time.

If you pass on the appliance, pass this user information on to subsequent owners.

To use the appliance properly and safely, read this user information carefully before installation and use. Always follow the instructions, safety instructions and warnings contained therein. They are important so that you can install and operate the appliance safely and properly.

1.1 Intended use

- This appliance is intended for household use and similar applications such as:
  - in staff kitchen areas in shops, offices and other work areas
  - in agriculture and by guests in hotels, motels and other accommodation
  - bed and breakfasts
  - in catering and similar wholesale operations
- Further uses:
  - This appliance is not suitable for freezing food.*
  - This appliance is suitable for integrated under-counter installation.
  - All other types of application are impermissible.

1.2 Foreseeable erroneous use

The following applications are expressly prohibited:

- Storage and cooling of:
  - Chemically unstable, flammable or corrosive substances
  - Explosive substances, such as aerosol containers with flammable propellant gas
  - Medication, blood plasma, laboratory compounds or similar substances and products subject to the Medical Device Directive 2007/47/EC
- Use in explosive areas

Improper use of the appliance will result in damage or spoilage of the stored foods.

1.3 User group

- This appliance must not be used by persons (including children) with reduced physical, sensory or mental capabilities, or by persons with a lack of experience and knowledge, unless they are supervised by a person responsible for their safety or have been given instructions on how to use the appliance. Children must be supervised to ensure that they do not play with the appliance.
- Children aged between 3 and 8 are allowed to load and unload the fridge-freezer.

1.4 Warning notices – Risks for the user

- WARNING: Keep ventilation openings in the equipment housing or in installations clear of obstructions.
- WARNING: Do not use any mechanical devices or other means to speed up the defrosting process other than those recommended by the manufacturer.
- WARNING: Do not damage the coolant circuit.
- WARNING: Do not operate electrical appliances inside the refrigerator/freezer compartment that are not of the type recommended by the manufacturer.
- WARNING: When installing the appliance, ensure that the mains lead is not trapped or damaged.
- WARNING: Do not place portable multiple sockets or power supply units at the rear of the appliance.

Once the appliance has been installed, it must still be possible to disconnect it from the mains.

- Accessible mains plug (above, below or next to the appliance)
- Tripping of the fuse in the building's electrical installation in accordance with the installation regulations.

WARNING: Fire hazard/flammable substances.

The symbol is located on the compressor and may also appear in other places on the appliance. It marks the danger posed by flammable substances. Do not remove the sticker.

- The more refrigerant there is in the appliance, the larger than room must be in which it is located. In rooms that are too small, a leak can product a flammable gas/air mixture. For every 8 g of refrigerant, the installation room must be at least 1 m^3 in size. Information on the refrigerant contained is given on the type plate inside the appliance.
- Clean regularly surfaces that can come in contact with food and accessible drainage systems.
- Package raw meat or fish in clean, closed containers. This will prevent meat or fish from touching or dripping onto other food.
- If the fridge-freezer is left empty for a long period, switch it off, defrost it, clean it, dry it and leave the door open to prevent mould from forming.
- Avoid prolonged skin contact with cold surfaces or with cold food. Use gloves for protection, for example.
- Alcoholic beverages and other containers bearing alcohol must be sealed tight for storage. Any leaking alcohol may ignite due to electrical parts.
- Only open the door for a short time. This prevents the temperature inside the appliance from rising.
- Do not reach between the door and the appliance when opening and closing. Fingers may become trapped.
- Do not place any items in the front section of the bottom glass shelf to ensure that the appliance door closes properly. (see 6.2 Fridge compartment) (see 9.2 Door rack)

- WARNING: This appliance must be secured in accordance with the instruction manual to prevent any risks arising from a lack of stability.
- Follow the instructions regarding installation, fixing, required dimensions and connections. (see 3 Setting up and connecting)

1.5 Faults, damage and repairs

- Mains connection with cooling appliance plug:
  If the mains lead of this appliance is damaged, it must be replaced with a special connection line available from the manufacturer or its customer service department. The customer may make the change.
- Repairs and interventions on the appliance may only be carried out by the customer service or by other qualified personnel trained for this purpose.
- In the event of malfunctions and appliance faults, pull out the mains plug or switch off the fuse. Always hold the plug when pulling out the mains plug. Never tug on the cable.

1.6 Information concerning disposal

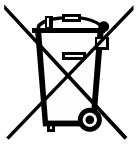

The crossed-out rubbish bin symbol is a note that the appliance must not be disposed of with unsorted household waste and must be placed in a separate collection. It contains recyclable materials and may be reusable.

The symbol may be found on the compressor. It pertains to the oil in the compressor and indicates the following danger: **Can be fatal if swallowed or with penetration of the respiratory tract.** This information is only significant for recycling. No risk exists with normal use.

This or a similar sticker may be on the rear of the appliance. It indicates that there are vacuum insulation panels (VIP) or perlite panels in the door and/or housing. This information is only significant for recycling. Do not remove the sticker.

- The old appliance must be properly and therefore professionally disposed of in accordance with the local applicable regulations and legislation. When transporting the old appliance do not damage the refrigerant circuit, so that the refrigerant inside (information on the type plate) and the oil do not leak out uncontrolled.
- For Germany: The appliance can be disposed of free of charge via the class 1 collection containers at the local recycling/reusable material centres. When purchasing a new refrigerator/freezer and a sales area > 400 m^2, the old appliance is also taken back free of charge via the trade.
- EU: Please check with your local authorities to find out how to dispose of old appliances.

1.7 Conformity

The coolant circuit has been tested for leak-tightness. When installed, the appliance complies with the relevant safety regulations and directives.

The full text of the EU Declaration of Conformity is available at the following web address: www.liebherr.com

1.8 Climate classes

Depending on its climate class, the appliance is designed for operation within certain ambient temperature limits. The climate class for your appliance is printed on the type plate.

Note

▶ In order to guarantee fault-free operation comply with the specified ambient temperatures.

Climate class	for ambient temperatures from
SN	10 °C to 32 °C
N	16 °C to 32 °C
ST	16 °C to 38 °C
T	16 °C to 43 °C
SN-ST	10 °C to 38 °C
SN-T	10 °C to 43 °C

1.9 SVHC substances in accordance with the REACH Regulation

- You can use the following link to check whether your appliance contains SVHC substances in accordance with the REACH Regulation:
  https://go.liebherr.com/z3eewm

1.10 EPREL database

- From 1 March 2021, the information on energy labelling and eco-design requirements will be available in the European product database (EPREL). The product database can be accessed via the following link https://eprel.ec.europa.eu/. Here, you are asked to enter the model identifier. You will find the model identifier on the type plate.

1.11 Open source licences

- The appliance contains software components that use open source licences. Information on the open source licences used can be found here:
  home.liebherr.com/open-source-licences

1.12 Spare parts

- The spare parts availability for functional parts and stockable parts of the equipment is 15 years.

1.13 Warning levels

DANGER	Identifies an immediately dangerous situation that will result in death or serious bodily injuries if it is not prevented.
WARNING	Identifies a dangerous situation that could result in death or serious bodily injury if it is not prevented.
CAUTION	Identifies an immediately dangerous situation that could result in slight or moderate injuries if it is not prevented.
ATTENTION	Identifies a hazardous situation that could result in property damage if it is not prevented.
Note	Identifies useful information and tips.

*** Depending on model and options**

2 Appliance at a glance

2.1 Scope of delivery

Check all parts for transport damage. Contact your dealer or customer service in the event of complaints. (see 11.4 Customer Service)

Your new appliance comes with the following parts:
- Built-in appliance
- Features (depending on the model)
- Installation materials (depending on the model)
- “Quick Start Guide”
- “Installation Guide”*
- Service Brochure

2.2 Overview of the appliance and equipment

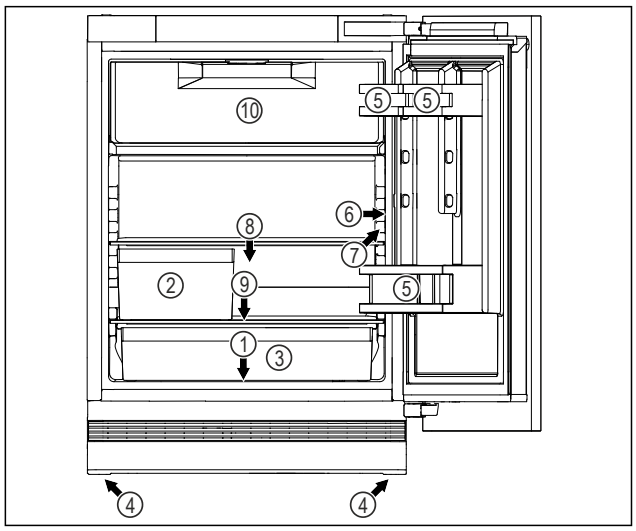

Fig. 1 Example illustration, front end

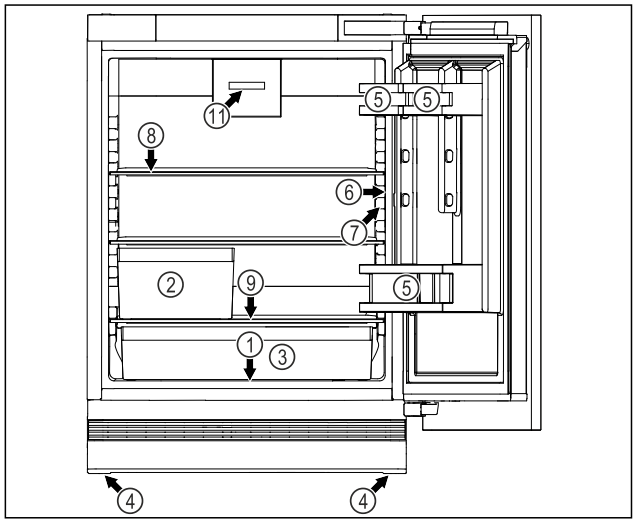

Fig. 1 Example illustration, front end

Equipment

(1)	Type plate	**(7)**	Interior lighting
(2)	Fruit and vegetable box	**(8)**	Shelf
(3)	Universal box	**(9)**	Defrost water drain
(4)	Adjustable foot	**(10)**	4-star freezer compartment*
(5)	Door racks	**(11)**	Fan with FreshAir activated charcoal filter*
(6)	Controls and temperature display		

3 Setting up and connecting

3.1 Installation requirements

The installation conditions are crucial to ensure that you can operate your appliance safely, efficiently and without problems.
- Observe all safety instructions.
- Consider the location and position in the room.

WARNING
Danger of fire due to incorrect positioning!
If the mains cable or plug touches the back of the appliance, the vibration can damage the mains cable or the plug resulting in a short circuit.
▶ Make sure the mains cable is not trapped under the appliance when you position the appliance.
▶ Stand the appliance so that it is not touched by connectors or main cables.
▶ Do not connect any appliances to sockets in the area of the back of the appliance.
▶ Do **not** place and operate multi-sockets/power distributors and other electronic devices (such as halogen transformers) at the back of the appliances.

WARNING
Fire hazard due to dampness!
If live parts or the mains lead become damp this may cause short circuits.
▶ The appliance is designed for use in enclosed areas. Do not operate the appliance outdoors or in areas where it is exposed to splash water or damp conditions.

WARNING
Risk of fire due to leaking refrigerant and oil!
The refrigerant inside the appliance is environmentally friendly, but flammable. The oil it contains is also flammable. Escaping refrigerant and oil can ignite in high concentrations and in contact with an external heat source.
▶ Do not damage the refrigerant circuit pipes or the compressor.

3.1.1 Installation site

- Only set up and use the appliance in enclosed spaces.
- Only operate the appliance when it is installed.
- If the appliance is installed in a very damp environment, condensation may form on the appliance exterior. Always make sure there is good ventilation and aeration at the installation site.
- The more refrigerant there is in the appliance, the larger than room must be in which it is located. In rooms that are too small, a leak can product a flammable gas/air mixture. For every 8 g of refrigerant, the installation room must be at least 1 m^3 in size. Information on the refrigerant contained is given on the type plate inside the appliance.
- The floor on which the appliance stands must be horizontal and level.

*** Depending on model and options**

3.1.2 Position in space

- Do not install the appliance in direct sunlight or near radiators or similar sources of heat.
- You can install the appliance directly next to an oven.
- If the appliance is installed directly next to an oven, the energy consumption may increase slightly. This is dependent on the service life and usage intensity of the oven.
- If you install the appliance in a island unit, appliances with an integrated exhaust air system can damage the appliance. Either ensure separate air ducting or install a partition wall between the appliances.
- Use in hazardous areas is not permitted.

3.1.3 Insert under worktop

- If you are installing the appliance in a kitchen unit that is standing on uneven ground: Levelling kitchen furniture.

3.2 Appliance dimensions

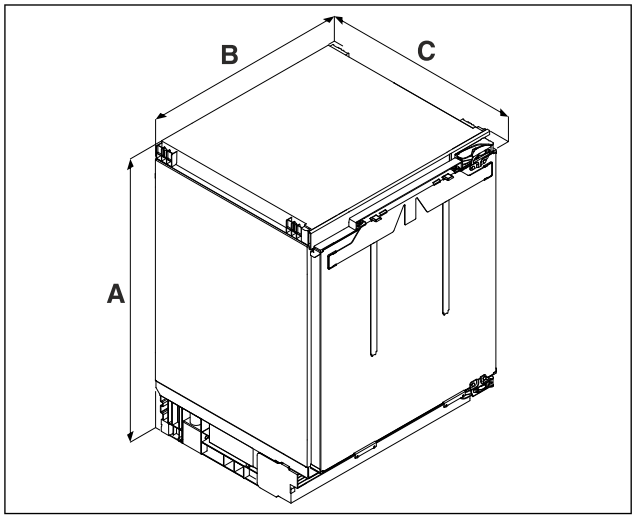

Fig. 2 Example illustration

(A) Appliance height including feet
(B) Appliance width
(C) Appliance depth

	U.. 36..[A]	U.. 37..[A]
A	819 mm	859 mm
B	597 mm	
C	556 mm	

[A] Appliance type designation

3.3 Recess dimensions

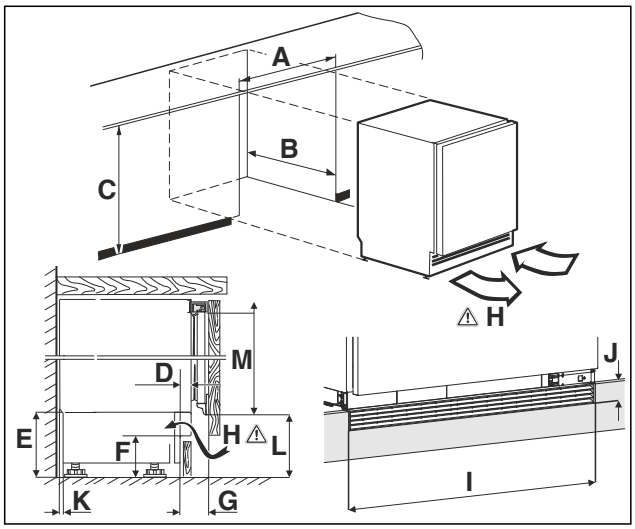

Fig. 3 Example illustration

(A) Niche width
(B) Niche depth
(C) Niche height
(H) Ventilation cross-section

A	600 mm	
B	min. 560 mm	
C	**U.. 36..:**[A] 820 mm to 880 mm	**U.. 37..:**[A] 860 mm to 920 mm
D	11 mm to 66 mm	
E	100 mm to 160 mm	
F	60 mm to 120 mm	
G	54 mm to 109 mm	
H	150 cm²	
I	600 mm	
J	40 mm	
K	18 mm	
L	**SDUFD 3603 / DURD 3600 / DuRd 3601:** 99 mm to 159 mm **SUFd 3603 / SUFNd 365i / SUFNc 365i / SUFNh 3653 / URd 3600 / URh 3600 / URD 365i / URd 3601 / URh 365i:** 104 mm to 164 mm **URPh 365i / URPd 356i / SUFNPc 365i:** 126 mm to 186 mm **SUFNc 375i / SUFc 3703 / URc 3700 / URC 375i /URC 3701 / SUBa 375i / URh 375i / URPc 375i:** 104 mm to 164 mm	
M	**SDUFD 3603 / DURD 3600 / DuRd 3601:** 752 mm **SUFd 3603 / SUFNd 365i / SUFNc 365i / SUFNh 3653 / URd 3600 / URh 3600 / URD 365i / URd 3601 / URh 365i:** 705 mm **URPh 365i / URPd 356i / SUFNPc 365i:** 680 mm **SUFNc 375i / SUFc 3703 / URc 3700 / URC 375i /URC 3701 / SUBa 375i / URh 375i / URPc 375i:** 744 mm	

[A] Appliance type designation

*** Depending on model and options**

3.4 Unit front

3.4.1 Unit front weight

NOTICE
A heavy unit door may pose a risk of damage!
If the unit door is too heavy, damage to the hinges cannot be ruled out, which may compromise functionality.
▶ Before fitting the unit door, ensure that the unit door does not exceed the permissible weight.

Niche height	Maximum weight of the unit door
.. 36..[A)]	10 kg
.. 37..[A)]	10 kg

[A)] Appliance type designation

3.4.2 Unit door

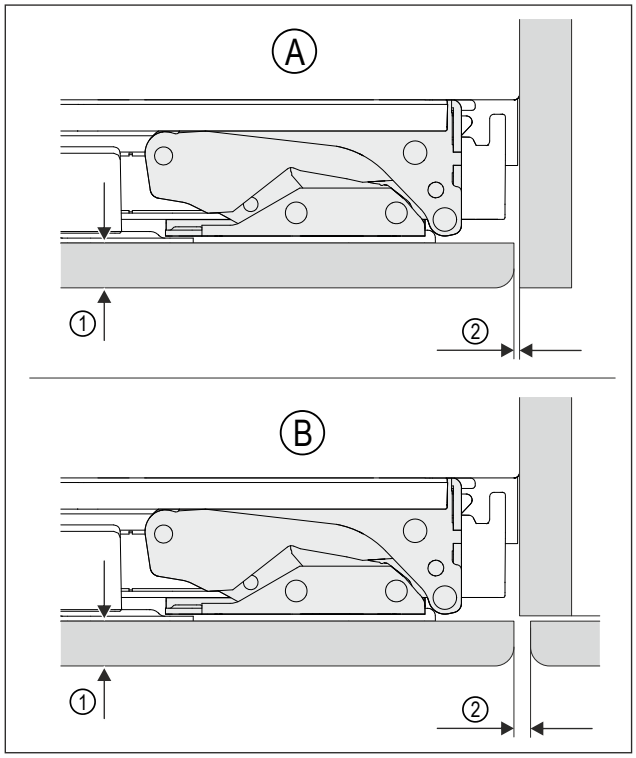

Fig. 4 Example illustration
(A) Niche with wall
(B) Niche with neighbouring furniture
(1) Front thickness
(2) Gap dimension

Front thickness	At least 16 mm to max. 19 mm
Gap dimension	At least 3 mm
The unit door must be flat and mounted without tension.	

3.4.3 Unit front dimensions

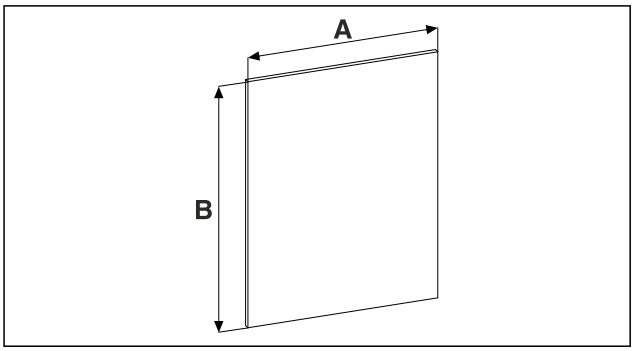

Fig. 5

Niche height	.. 36..	.. 37..
A	At least 595 mm	
B	At least 711 mm Maximum value may not be less than the ventilation cross-section of 150 cm².	At least 757 mm Maximum value may not be less than the ventilation cross-section of 150 cm².

[A)] Appliance type designation

3.4.4 Decorative plate dimensions

The decorative plate is pushed into the frame that is already fitted to the support plate. The support plate is supplied with the appliance. The support plate with the decorative plate is then installed on the appliance.

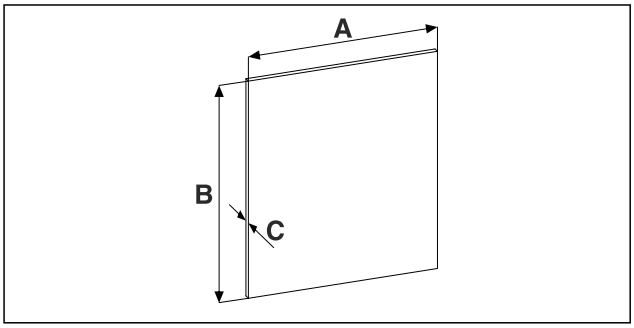

Fig. 6

Niche height	.. 36..
A	585 mm
B	678 mm
C	maximum 4 mm

[A)] Appliance type designation

3.5 Transporting the appliance

3.5.1 Transporting the appliance for initial use

Ensure that the following requirements are met:
❑ The appliance is packaged.
❑ The appliance is upright.

▶ Transport the appliance with the help of two people.
▶ Unpacking the appliance. (see 3.6 Unpacking the appliance)

3.5.2 Transporting the appliance after initial use

Observe the following instructions if you wish to transport or move the appliance again after initial use.

Ensure that the following requirements are met:

- ❑ The appliance is emptied.
- ❑ The appliance is upright.
- ❑ Appliance with door(s): Door is secured against accidental opening.
- ❑ Appliance with telescopic unit: The telescopic unit is secured against accidental opening.
- ❑ Appliance is removed.

▶ Transport the appliance with the help of two people.

3.6 Unpacking the appliance

NOTICE
Risk of damage if the unit is moved!
If you move the unit across the floor without any protection, it may damage the floor.
▶ Make sure you cover the floor properly before removing the packaging from the unit.

▶ Check the appliance and packaging: If you suspect that the goods have been damaged in transit, please contact the supplier before connecting them.

NOTICE
Damage to property caused by pointed or sharp objects!
Using pointed or sharp objects when removing packaging material may damage the appliance.
▶ Do not use any pointed or sharp objects to remove the packaging material.

▶ Remove the packaging materials.

3.7 Replacing the door hinge

3.7.1 Safety instructions

WARNING
Risk of injury if the door is not reversed correctly!
▶ Replace the door hinge with specialist personnel.

WARNING
Risk of injury and material damage due to door weight!
▶ Only change the door hinge if you can carry a weight of 15 kg.
▶ Change the door hinge with two people.

NOTICE
Live parts!
Damage to electrical components.
▶ Remove the mains plug before you reverse the door.

3.7.2 Tool

3.7.3 Scope of supply

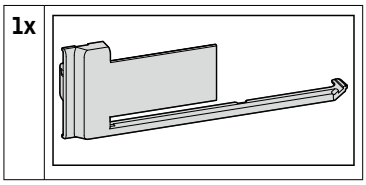

3.7.4 Removing covers

▶ Open the door.

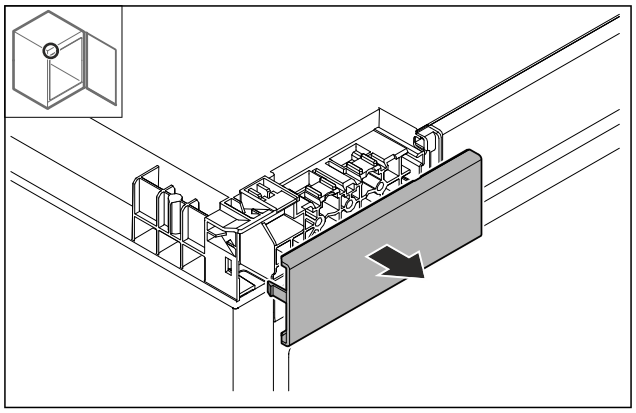

Fig. 7

▶ Remove cover.

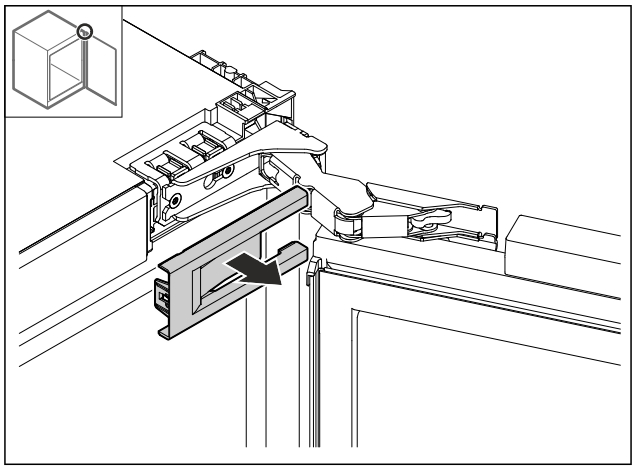

Fig. 8

▶ Remove cover.

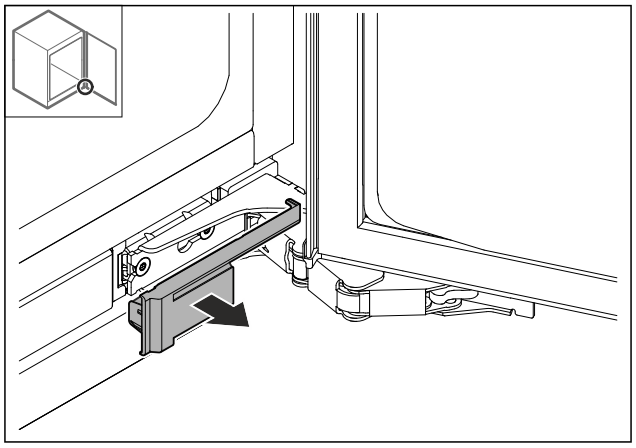

Fig. 9

▶ Remove cover.

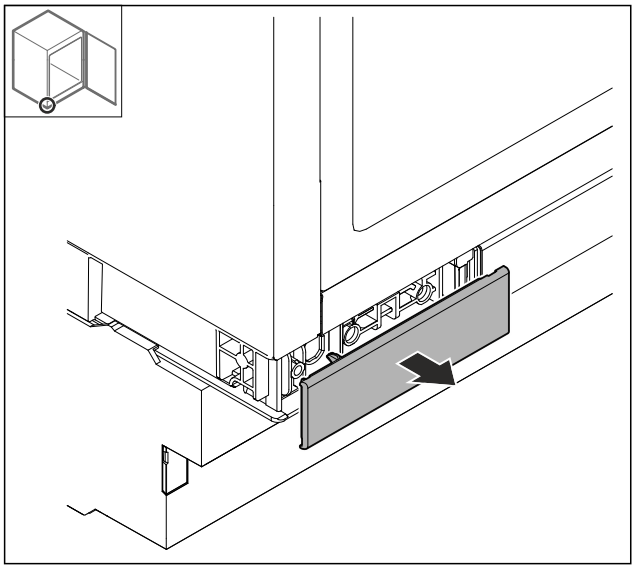

Fig. 10

▶ Remove cover.

3.7.5 Removing the door

NOTICE
Risk of injury if the door tips out!
▶ Hold the door.

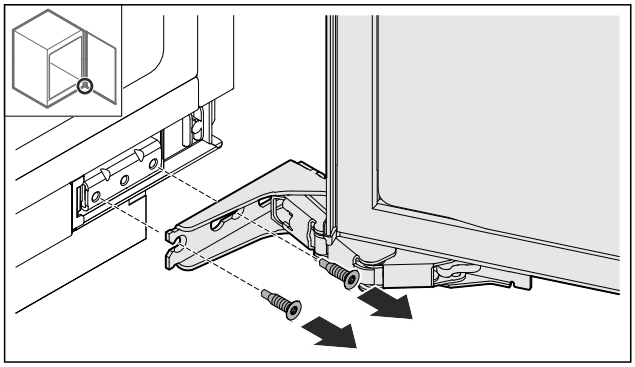

Fig. 11

▶ Remove the screws.

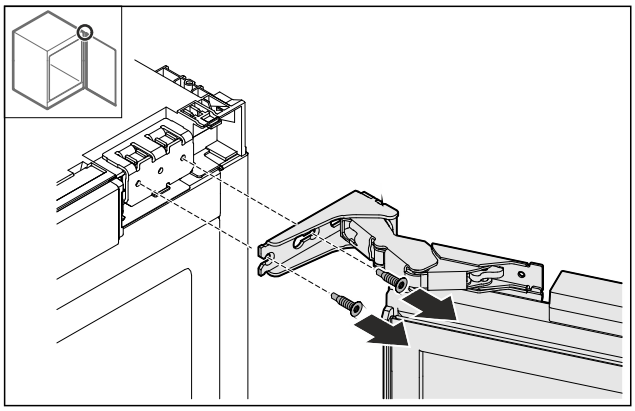

Fig. 12

▶ Remove the screws.
▶ Remove the door.
▶ Place the door on a soft surface.

3.7.6 Removing the hinges

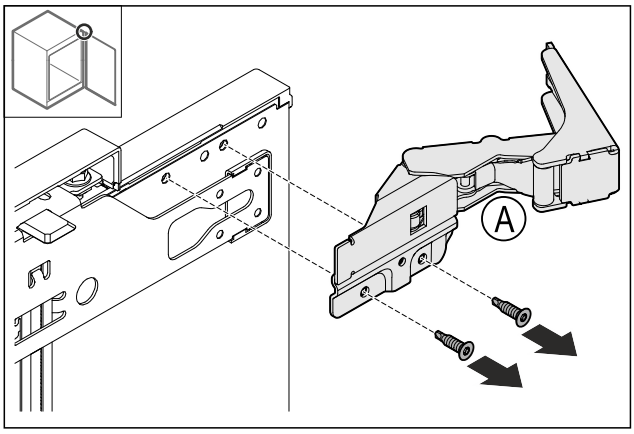

Fig. 13

▶ Remove the screws.

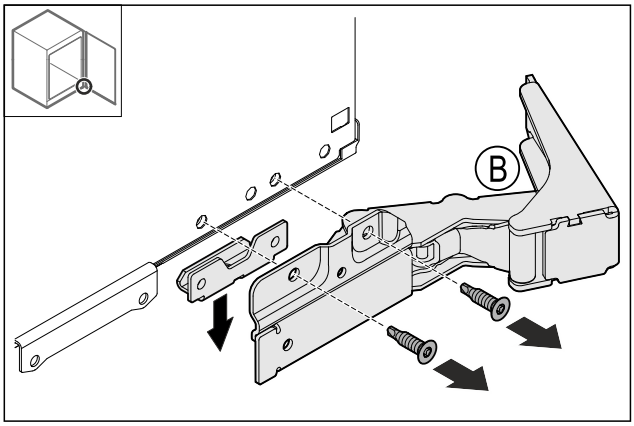

Fig. 14

▶ Remove the screws.

3.7.7 Relocating the mounting bracket

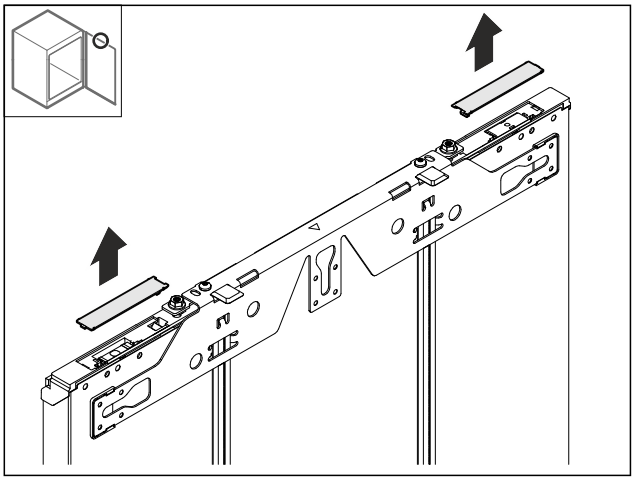

Fig. 15

▶ Detach the covers.

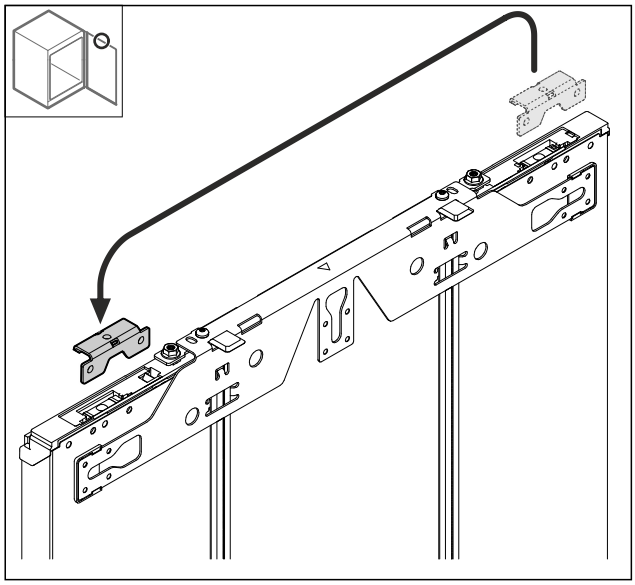

Fig. 16

▶ Relocate the lower bracket.

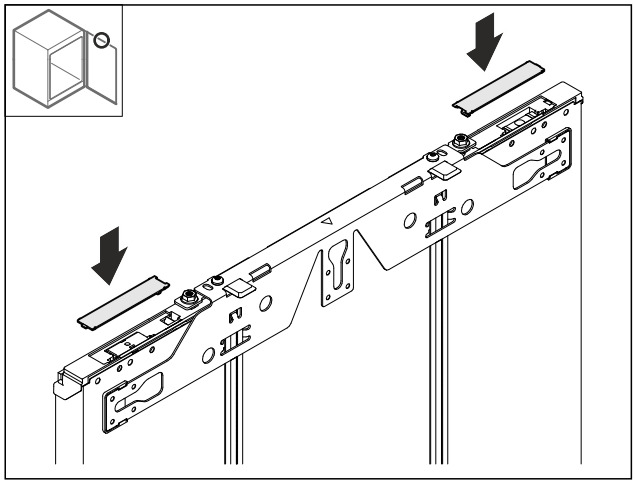

Fig. 17

▶ Fit the covers.

3.7.8 Fitting the hinges

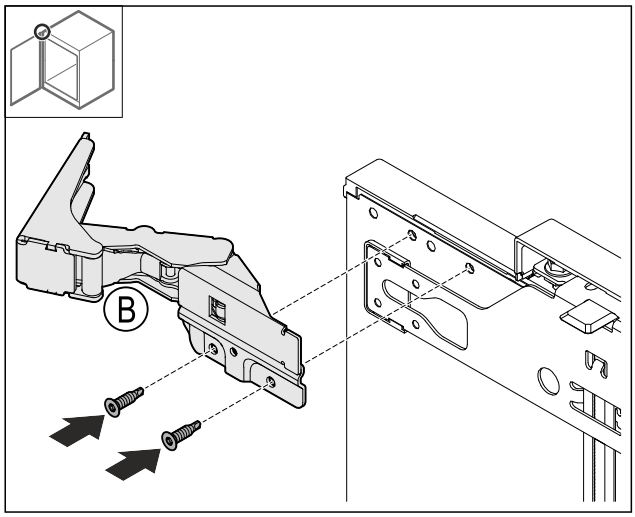

Fig. 18

▶ Screw on the hinge.

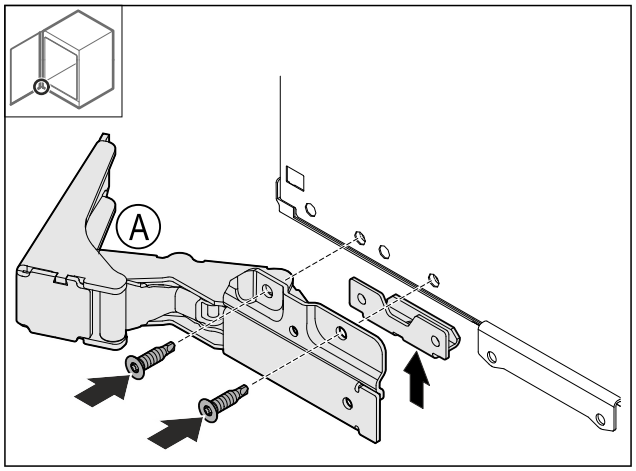

Fig. 19

▶ Screw on the hinge.

3.7.9 Relocating the upper bracket

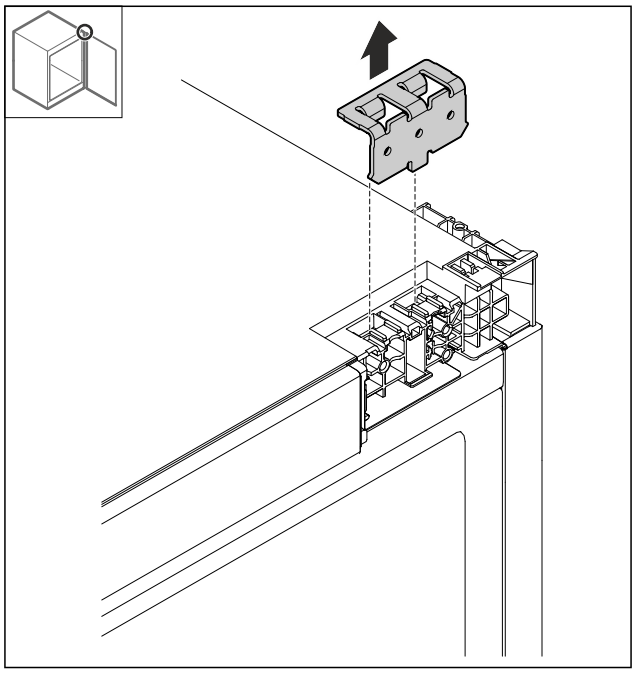

Fig. 20

▶ Remove the bracket.

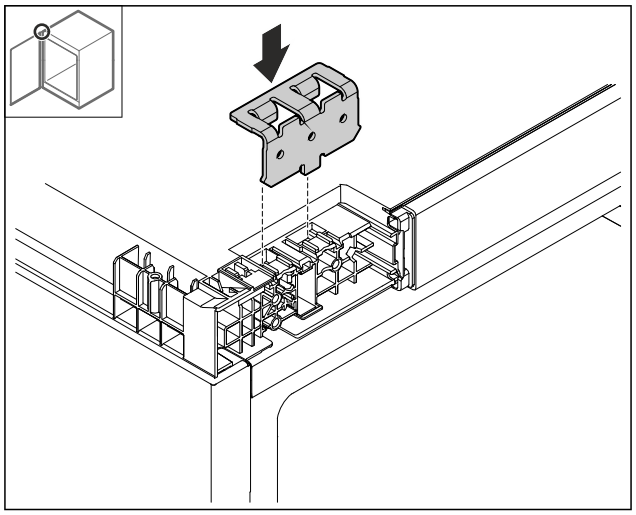

Fig. 21

▶ Insert the bracket.

3.7.10 Relocating the bottom bracket

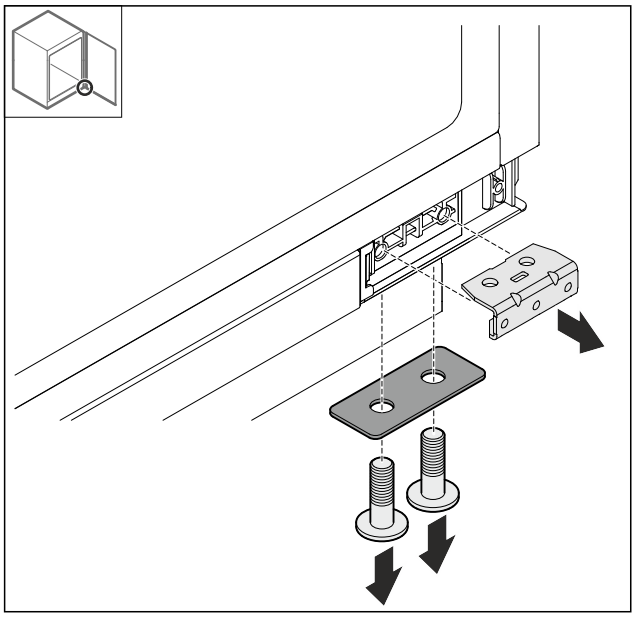

Fig. 22

▶ Detach the bracket.

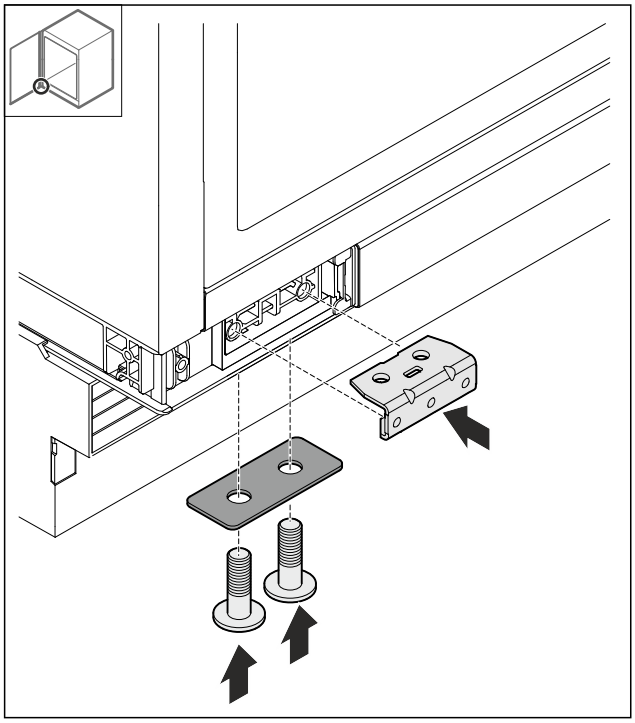

Fig. 23

▶ Fit the bracket.

3.7.11 Switch lower bracket

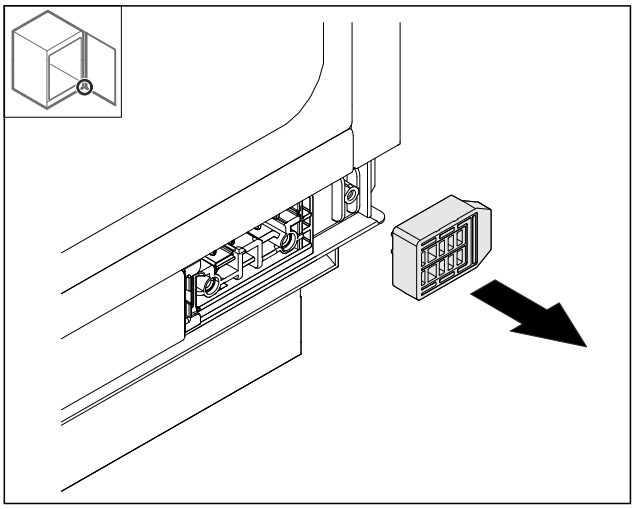

Fig. 24

▶ Remove the bracket.

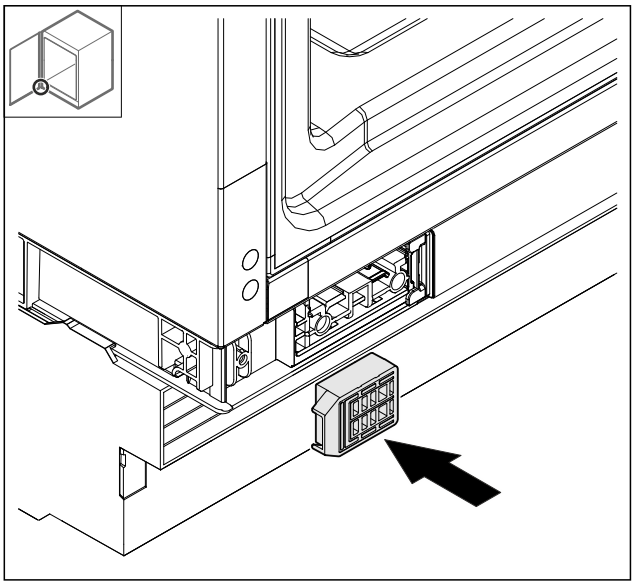

Fig. 25

▶ Insert the bracket.

3.7.12 Fitting the door

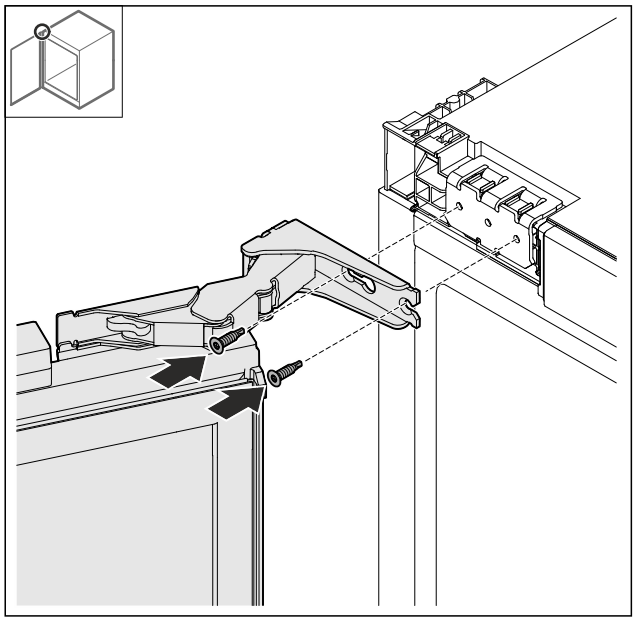

Fig. 26

▶ Screw on door at the top.

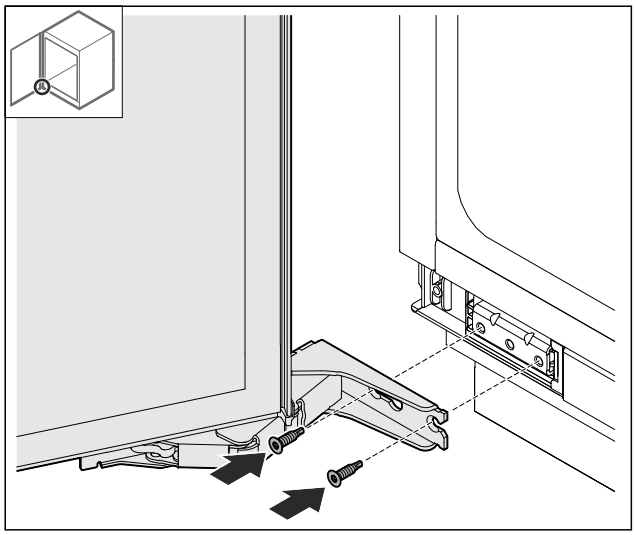

Fig. 27

▶ Screw on door at the bottom.

3.7.13 Putting on the covers

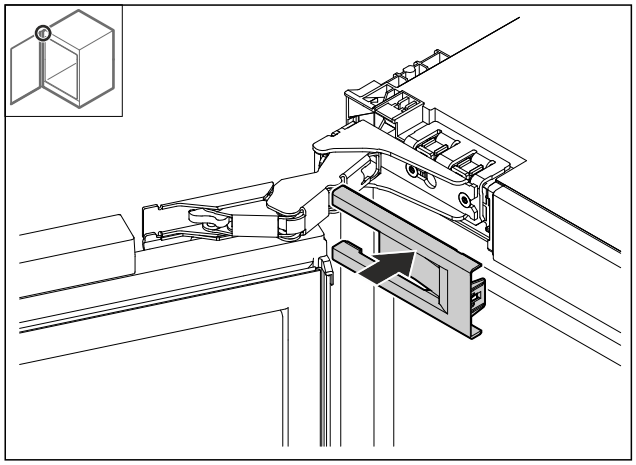

Fig. 28

▶ Put on the cover.

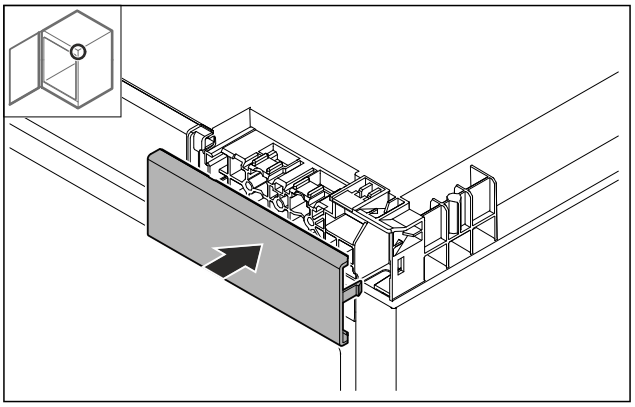

Fig. 29

▶ Put on the cover.

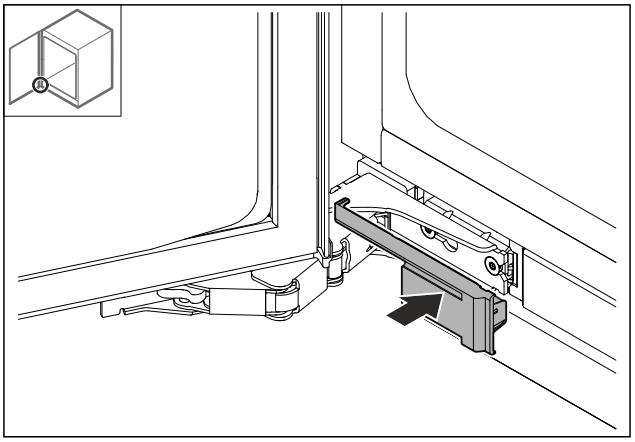

Fig. 30

▶ Put on the cover.

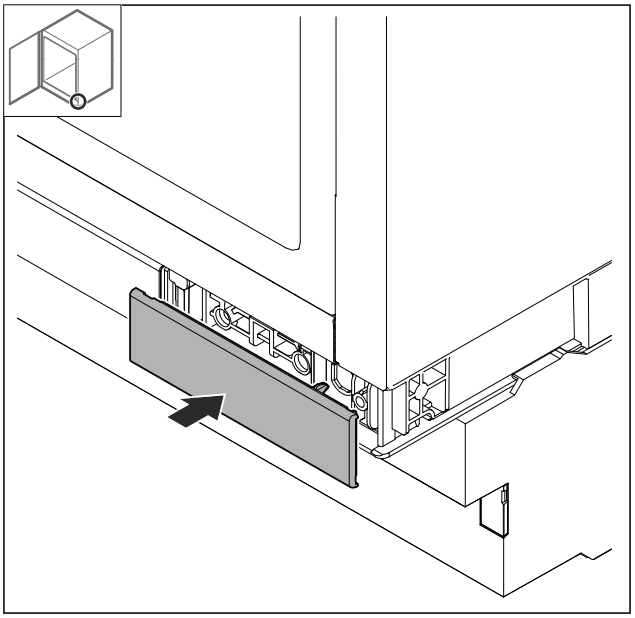

Fig. 31

▶ Put on the cover.

3.8 Installing the appliance in the niche

The appliance is installed in the niche per these main steps:

- (see 3.8.1 Provide tools)
- (see 3.8.2 Check the contents of the delivery)
- (see 3.8.3 Preparing the appliance)
- (see 3.8.4 Determine the installation position)
- (see 3.8.5 Preparing the mains connection)

- (see 3.8.6 Preparing the appliance)
- (see 3.8.7 Aligning the appliance)
- (see 3.8.8 Screwing the appliance into the niche)
- (see 3.8.9 Fitting the ventilation grille)

3.8.1 Provide tools

3.8.2 Check the contents of the delivery

1x	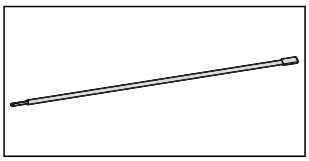
1x	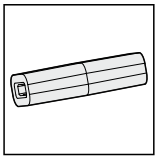
2x	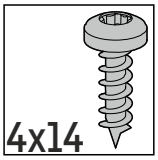
2x	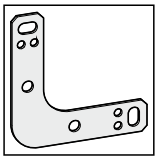
2x	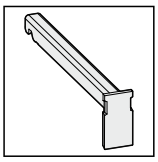

3.8.3 Preparing the appliance

Before installing the appliance in a niche, make sure that the following requirements are met:

- ❑ The appliance is at the installation site.
- ❑ The door hinge has been hung. You can only change the door hinge from the outside of the niche because you need enough space to do so.

3.8.4 Determine the installation position

Before installing the appliance in the niche, you must decide on the fixing method. There are two fixing options: side fixing and top fixing. A combination of side fixing and top fixing is possible.

Lateral fixing	Ceiling mounting
Substructure under a hard worktop such as granite	No granite slab
The appliance is lower than the worktop when the adjustable feet are fully extended.	Appliance sits slightly braced under worktop when adjustable feet are fully extended.
Appliance side panel available for screwing.	

3.8.4 Preparing the mounting bracket for top mounting

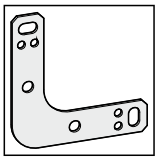

Fig. 32 Scope of delivery

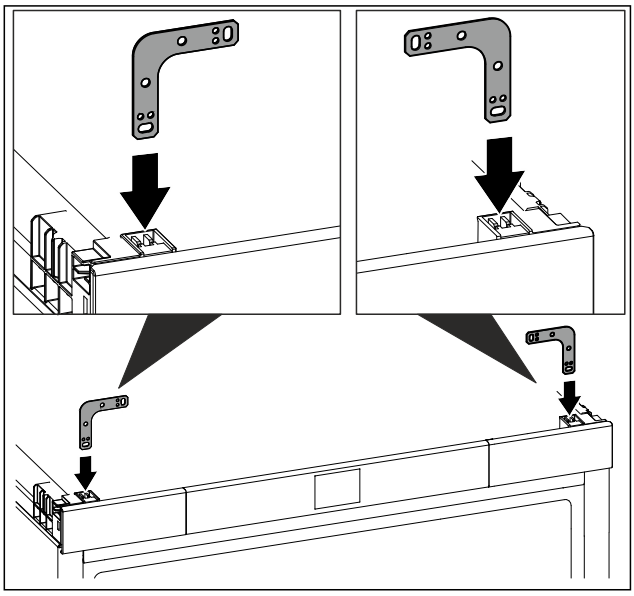

Fig. 33

▶ Insert the bracket into the mounting opening in the top of the appliance.

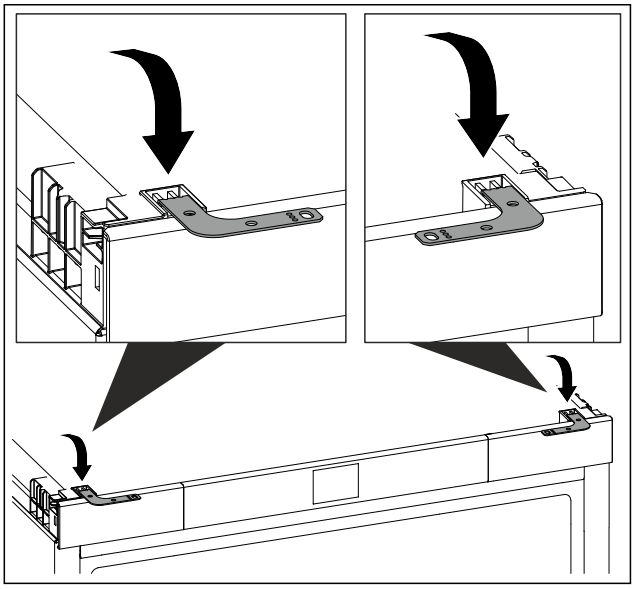

Fig. 34

▶ Bend the bracket forwards.
▷ Bracket remains on the appliance.

3.8.4 Preparing the mounting bracket for side mounting

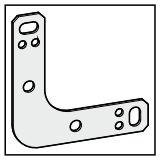

Fig. 35 Scope of delivery

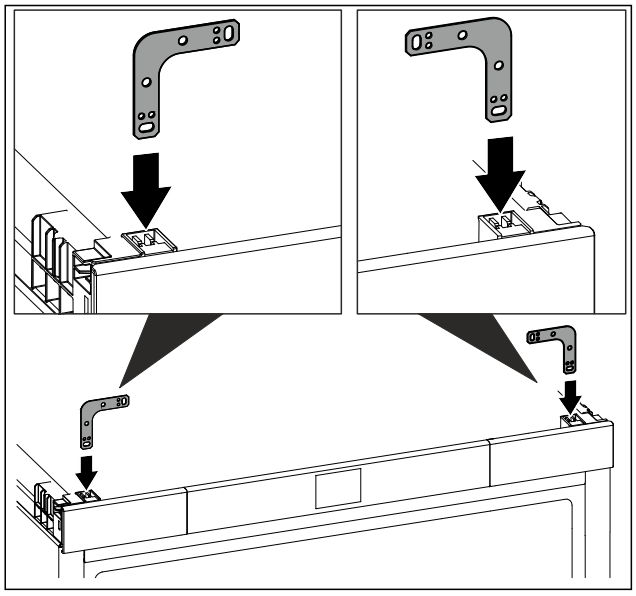

Fig. 36

▶ Insert the bracket into the mounting opening in the top of the appliance.

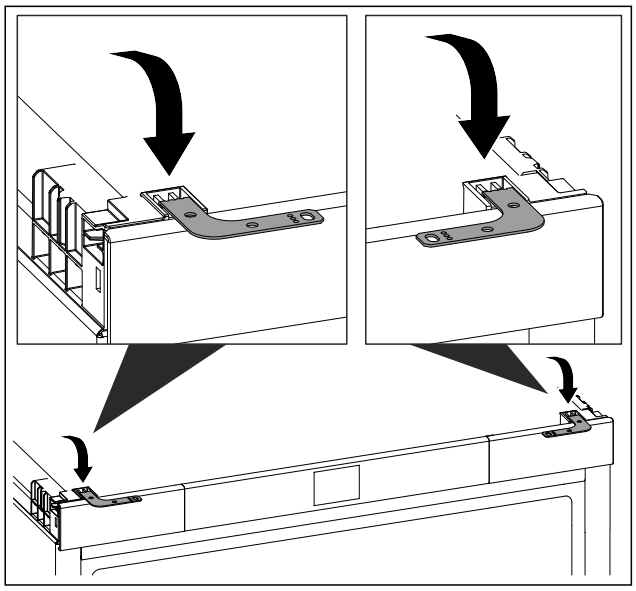

Fig. 37

▶ Bend the bracket forwards.

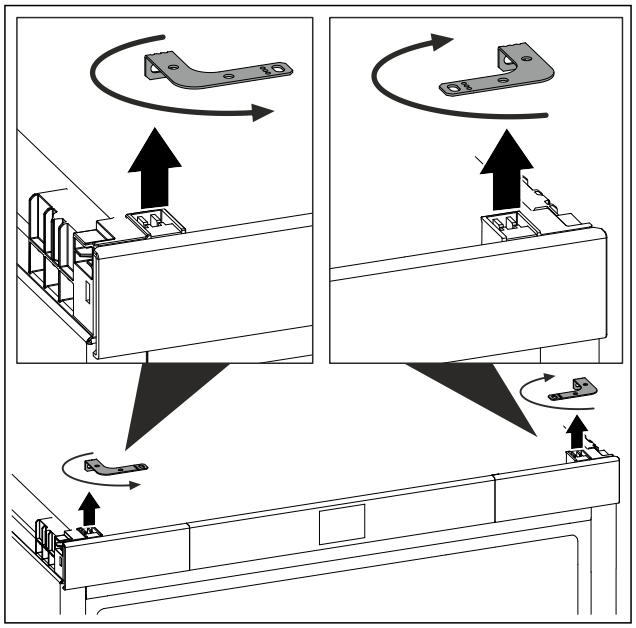

Fig. 38

▶ Pull out the bracket.
▶ Rotate the bracket in the direction of the arrow.

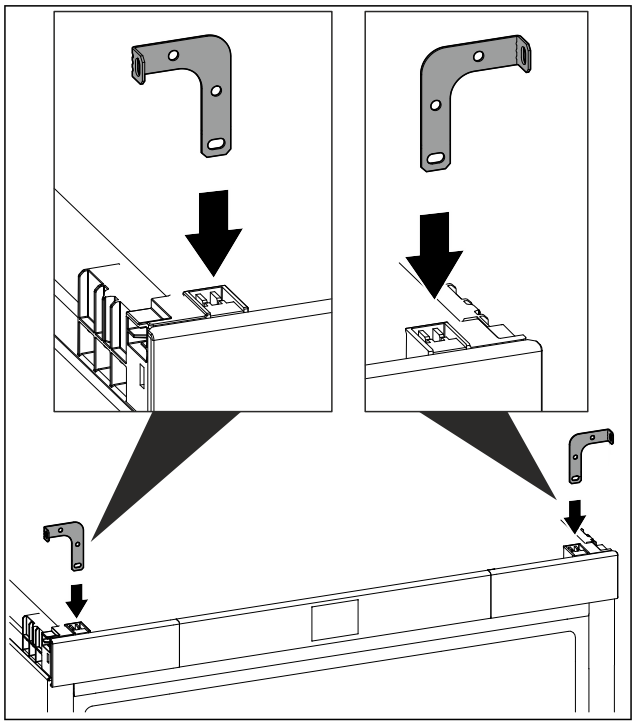

Fig. 39

▶ Insert the bracket with the straight end first.

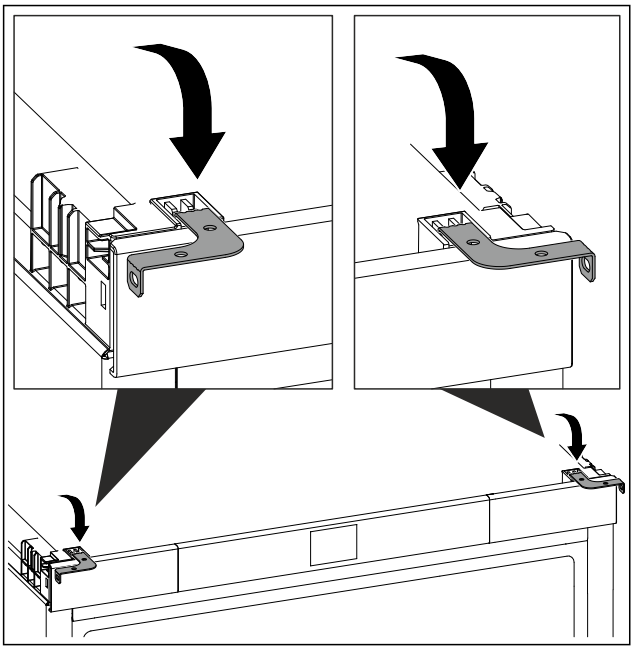

Fig. 40

▶ Bend the bracket forwards.
▷ Bracket remains on the appliance.

3.8.5 Preparing the mains connection

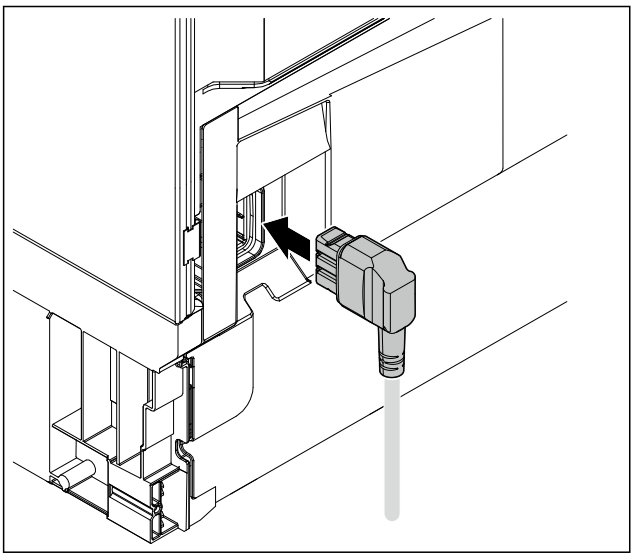

Fig. 41 Example illustration

▶ Plug the mains cable's IEC socket completely into the appliance plug on the back of the appliance.
▶ Ensure that the IEC socket is tight.
▶ Use a cord to lay the mains plug to a freely accessible socket.

3.8.6 Preparing the appliance

NOTICE
Risk of damage if the appliance is moved!
If you move the appliance, you may damage the floor or the appliance's adjustable feet may break off.
Before moving:
▶ Screw in the levelling feet completely.
▶ Place a cardboard strip (e.g. packaging) with approx. 100 mm x 600 mm under each of the adjustable feet.
When moving:
▶ Move the appliance carefully.
▶ For uneven floors: Carefully lift the appliance.
After moving:
▶ Remove the cardboard strips.

WARNING
Risk of fire due to short circuit!
▶ When you push the appliance into the niche: do not kink, jam or damage the mains cable.
▶ The appliance must not be operated with a defective mains cable.

▶ Slide the appliance into the niche.

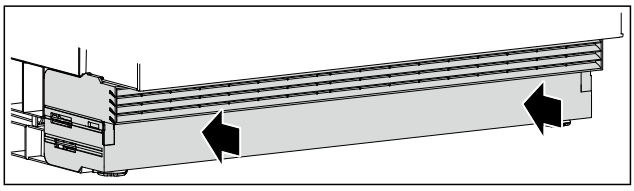

Fig. 42 Example illustration

▶ Push the ventilation grille all the way to the back.

3.8.7 Aligning the appliance

3.8.7 Aligning the appliance with regard to its height

Ensure that the following prerequisites are met:
❑ The floor where the unit is located must be horizontal and level.
❑ The niche is aligned horizontally and vertically.

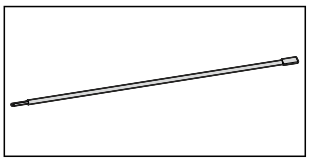

Fig. 43 Scope of delivery

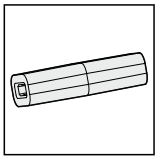

Fig. 44 Scope of delivery

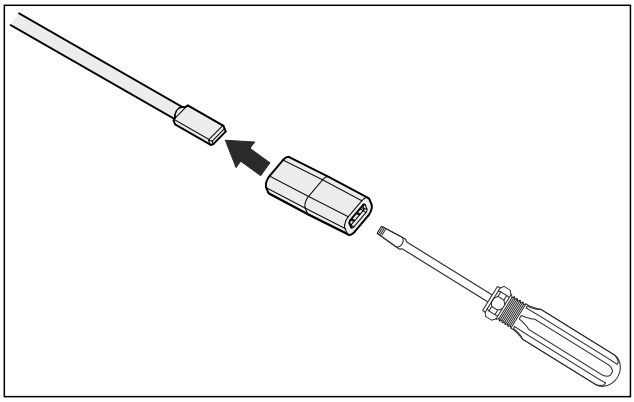

Fig. 45

▶ Height adjustment at the rear: Connect the rod to the adapter piece.

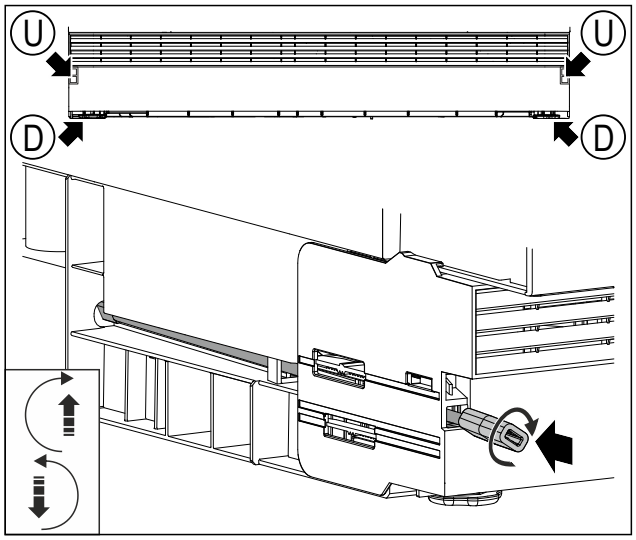

Fig. 46 Example illustration

(U) Rear height adjustment **(D)** Front height adjustment

▶ Insert the rod with the adapter piece into the opening *Fig. 46 (U)*.
▶ Turn the rod with the adapter piece.
▶ Raise the unit using the adjustable feet on each side until it is just below the worktop.
▷ Unit can be adjusted in height by maximum 60 mm.

3.8.7 Aligning the appliance with regard to its depth

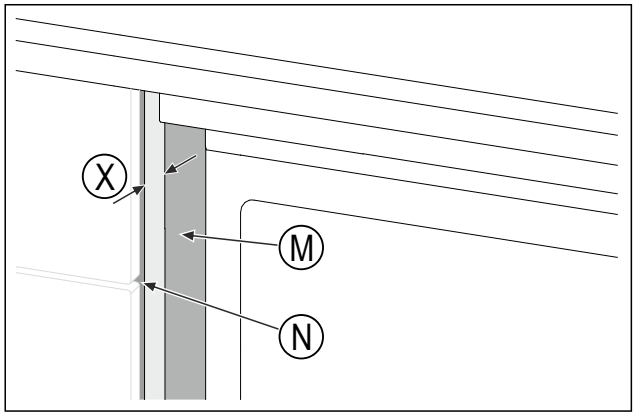

Fig. 47 Example illustration

(M) Appliance body **(N)** Front of niche

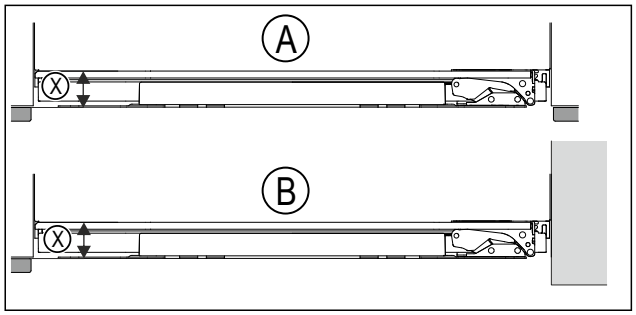

Fig. 48 Example installation situation

(A) Niche with neighbouring furniture **(X)** Distance between body of appliance and front of niche

(B) Niche with wall

▶ Check that the distance (X) corresponds to installation situation (A) or (B).

(X)	41.5 mm

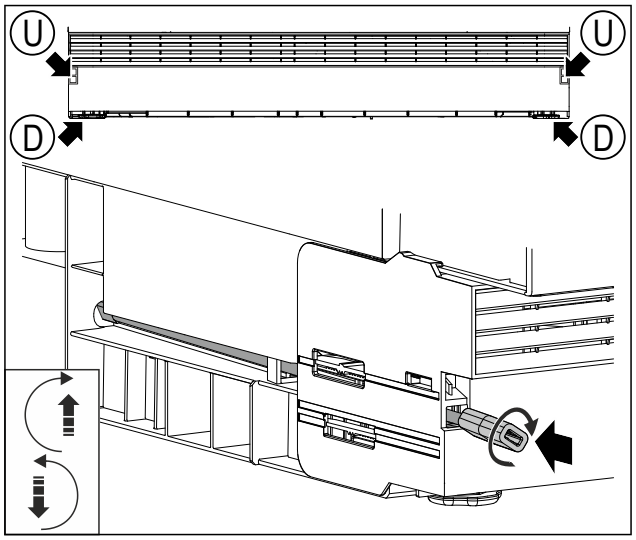

Fig. 49 Example illustration

(U) Rear height adjustment **(D)** Front height adjustment

▶ Unscrew the adjustable feet on each side as far as they will go.
▶ Keep the rod with adapter piece to remove the appliance.
▷ Appliance is aligned upright.
▷ The appliance is slightly braced in the recess between the floor and worktop.

3.8.8 Screwing the appliance into the niche

3.8.8 Ceiling mounting

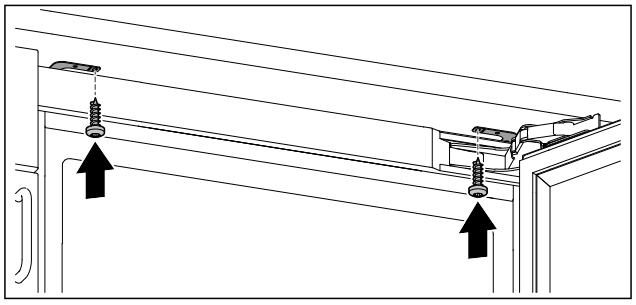

Fig. 50 Example illustration

▶ Screw the mounting brackets into place beneath the worktop using two screws each.

3.8.8 Lateral fixing

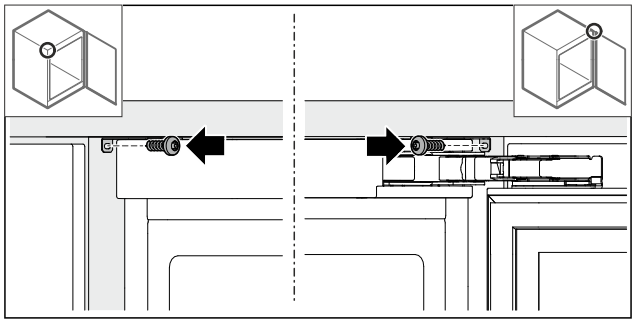

Fig. 51 Example illustration: Multi-joint hinge with unit front

▶ Screw the mounting brackets into place in the niche using one screw on the right and one on the left.

3.8.9 Fitting the ventilation grille

Ventilation grille visible: The ventilation grille is visible along its entire height.

Ventilation grille concealed: Only the ventilation slots are visible. The lower section is concealed by the plinth panel. The ventilation slots must remain unobstructed.

3.8.9 Aligning the visible ventilation grille

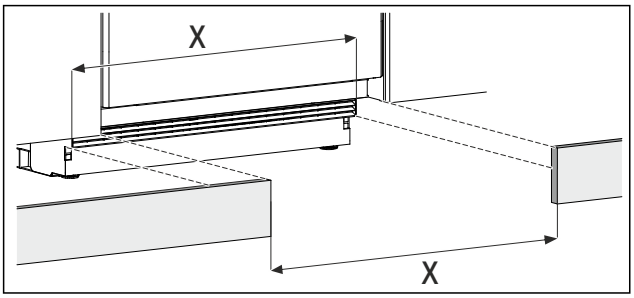

Fig. 52 Example illustration

▶ Measure unit base cut-out.

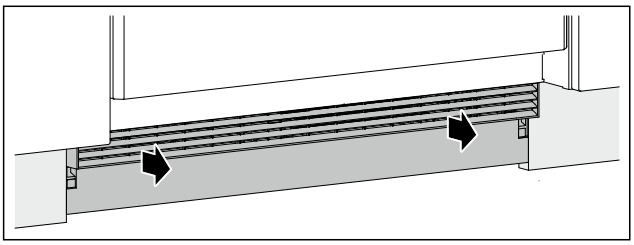

Fig. 53 Example illustration

▶ Position the plinth panel.
▶ Pull the ventilation grille forwards until the ventilation grille and the plinth panel are flush.
▷ Ventilation slots are completely free.

3.8.9 Aligning the ventilation grille so that it is concealed

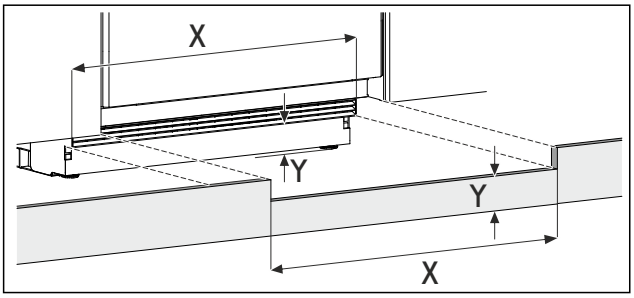

Fig. 54 Example illustration

▶ Measure unit base cut-out.
▶ Ensure that the ventilation slots are completely free: Cut out the X/Y section in the plinth panel.

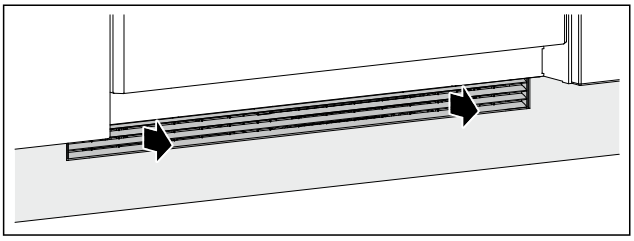

Fig. 55 Example illustration

▶ Position the plinth panel to test the fit.
▶ Pull the ventilation grille forwards until it is flush with the plinth panel.
▶ Remove the plinth panel.
▷ Ventilation slots are completely free.

3.8.9 Secure the ventilation grille

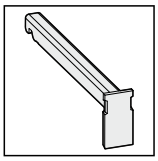

Fig. 56 Scope of delivery

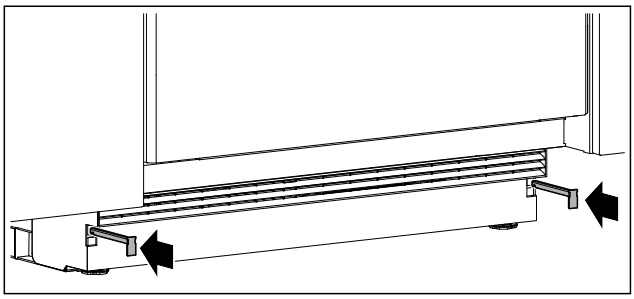

Fig. 57 Example illustration

▶ Insert the latch, holding the ventilation grille in place to prevent it from moving accidentally.
▷ Fit the unit fronts. (see 3.9 Fitting the unit door)
▷ (see 3.11 Connecting the appliance to the power supply)

3.9 Fitting the unit door

Tool

Scope of supply

1x	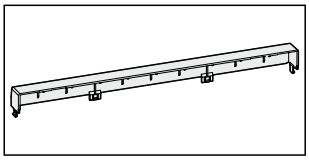
6x	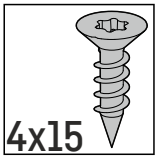
4x	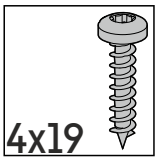

▶ Fit the handle to the unit door.

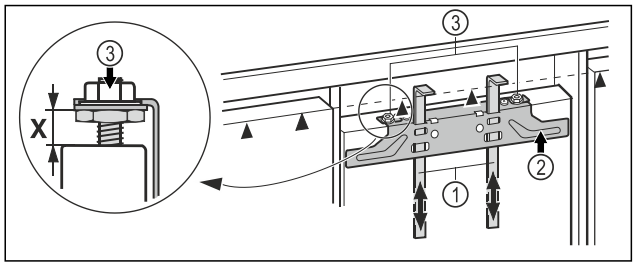

Fig. 58

- ▶ Check the default setting of **X = 8 mm**. (Distance between appliance door and lower edge of traverse)
- ▶ Push the assembly aids *Fig. 58 (1)* up to unit door height. Lower stop edge ▲ of the assembly aid = upper edge of the unit door to be assembled.
- ▶ Unscrew the fastening bar *Fig. 58 (2)* using the lock nuts *Fig. 58 (3)*.

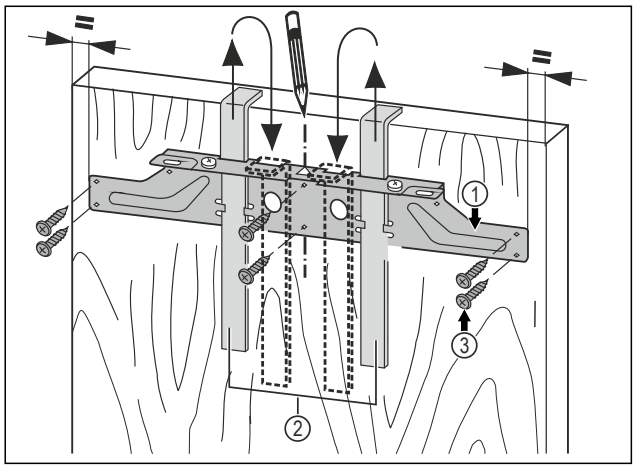

Fig. 59

- ▶ Hang the fastening bar *Fig. 59 (1)* with the mounting aids on the inside of the unit door *Fig. 59 (2)*.
- ▶ Align the fastening bar *Fig. 59 (1)* in the centre of the door.
- ▷ The distances to the outer edge are the same on the left and right.

For chipboard doors:

- ▶ Tighten the mounting bar *Fig. 59 (1)* with at least 6 screws *Fig. 59 (3)*.

For panelled doors:

- ▶ Screw the mounting bar *Fig. 59 (1)*to the edge with 4 screws *Fig. 59 (3)*.
- ▶ Pull the assembly devices *Fig. 59 (2)* upwards and push them, at an angle, into the receiving openings.

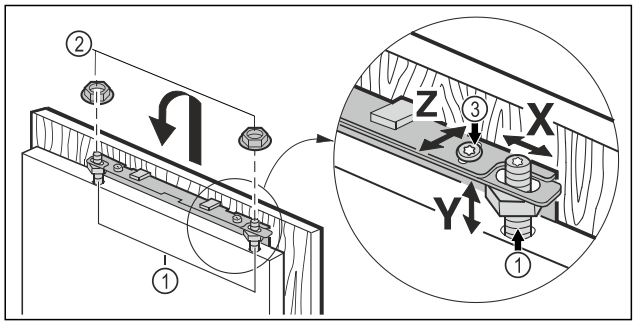

Fig. 60

- ▶ Hook the unit door onto the adjustment bolts *Fig. 60 (1)* and screw the lock nuts *Fig. 60 (2)* loosely onto the adjustment bolts.
- ▶ Close the door.
- ▶ Check the distance of the door against the surrounding unit doors.
- ▶ Align the unit door sideways: Move unit door in **X** direction.
- ▶ Align the unit door in height **Y** and in the lateral inclination: Adjust the adjustment bolt *Fig. 60 (1)* with a screwdriver.
- ▷ The unit door is aligned flush with the surrounding unit doors.
- ▶ Tighten the lock nuts *Fig. 60 (3)*.

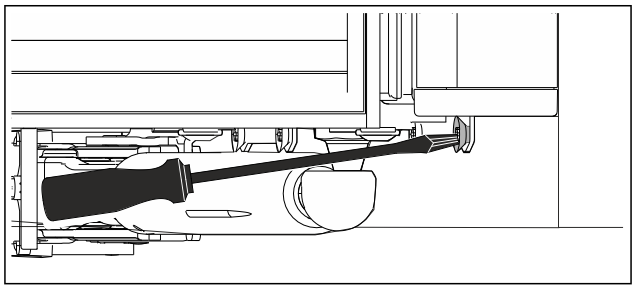

Fig. 61

- ▶ Screw the unit door to the appliance door.
- ▶ Pre-drill the fastening holes in the unit door (if necessary, pre-pierce with a graver).
- ▶ Screw the appliance door to the unit door using screws through the mounting brackets.

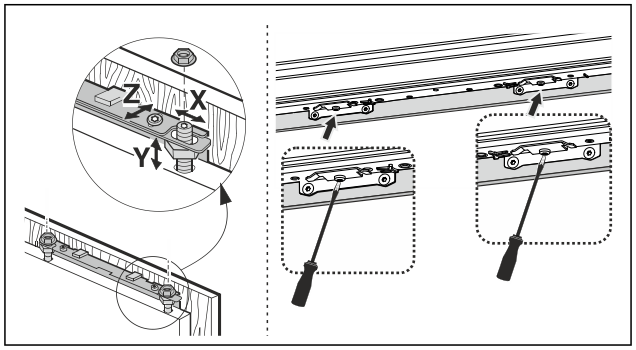

Fig. 62

- ▶ Align the unit door at depth **Z**: loosen the screws at the top and bottom of the door, then move the door.
- ▶ For good access to the screws under the door, open the door approx. 45° wide.
- ▶ Do not allow any burls or sealing lips to touch - this is important for correct function!
- ▶ Allow an air gap of 2 mm between the unit door and the cabiner carcass.

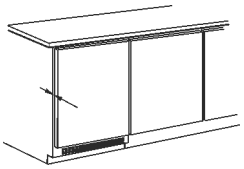

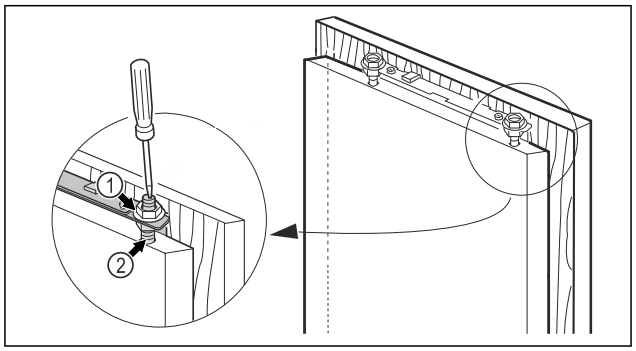

Fig. 63

- ▶ Check the fit of the door and readjust if necessary.
- ▶ Tighten all screws.
- ▶ Tighten the lock nuts *Fig. 63 (1)* with a hexagon spanner 13, stabilising the adjusting bolt *Fig. 63 (2)* with a screwdriver.

*** Depending on model and options**

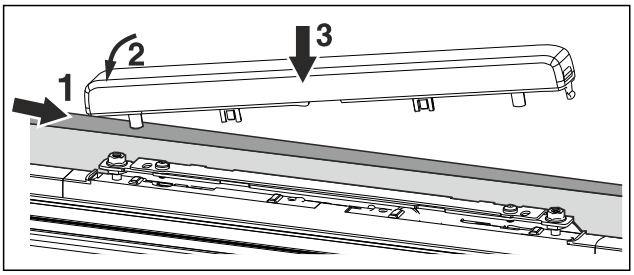

Fig. 64

▶ Position the upper cover and engage it.

3.10 After installation

▶ Remove all transport safety fittings from the interior.

NOTICE
Damage to property caused by pointed or sharp objects!
Using pointed or sharp objects when removing packaging material may damage the appliance.
▶ Do not use any pointed or sharp objects to remove the packaging material.

▶ Remove protective films from the interior: Peel the film off flat along the surface of the component to minimise its adhesive force.
▶ Clean the appliance. (see 10.6 Cleaning the appliance)
▶ Note down the type (model, number), appliance name, appliance/serial number, date of purchase and retailer's address.

3.11 Connecting the appliance to the power supply

WARNING
Danger of electric shock and injury due to damaged appliance or damaged mains cable!
Danger of cuts and fatal injuries. If the appliance or the mains cable is damaged during transport, you may be electrocuted. You could also cut yourself on damaged parts of the appliance housing.
▶ Check the appliance and the mains cable for damage after transport.
▶ Never put the appliance into operation if the appliance or the mains cable are damaged.
▶ Contact Customer Service.

You can connect your appliance to the mains using the power cable supplied separately. The mains power cable has an appliance coupler at one end and a mains plug at the other end.

Make sure that the following requirements are fulfilled:

- The appliance and power cable are undamaged.
- The appliance is installed in accordance with the regulations. (see 3.8 Installing the appliance in the niche)
- Requirements for the electrical connection are met.
- Dimensions for connection in accordance with regulations are known and observed.
- Mains voltage and frequency correspond to the specifications on the type plate.
- The socket is earthed according to the regulations and fused.
- The fuse tripping current is between 10 A and 16 A.

NOTICE
Danger of damage to incorrect operation!
Damage to the electrical components of the appliance.
▶ Only use the supplied mains cable.

WARNING
Danger of fire due to incorrect connection!
Burns.
Damage to the appliance.
▶ Do not use an extension cable.
▶ Do not use distributor blocks.

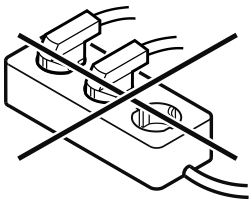

NOTICE
Danger of damage to incorrect connection!
Damage to the appliance.
▶ Do not connect the appliance to a stand-alone inverter, e.g. solar power systems and petrol generators.

▶ Connect the mains cable plug to the power supply. Ensure that the plug is tightly in the socket.
▷ The appliance is connected. For information regarding first use, see the following section or the operating instructions.

3.12 Disposing of packaging

WARNING
Danger of suffocation due to packing material and plastic film!
▶ Do not allow children to play with packing material.

The packaging is made of recyclable materials:

- corrugated board/cardboard
- expanded polystyrene parts
- polythene bags and sheets
- polypropylene straps
- nailed wooden frame with polyethylene panel*

▶ Take the packaging material to an official collecting point.

4 Functionality of the display

You operate your device with the touchbutton.

4.1 Navigation by touchbutton and symbol explanation

In the illustrations, different symbols are used to navigate the display by touchbutton. The following table describes these symbols.

Symbol	Description
	Touch the touchbutton with your finger briefly: Navigate through main menu and submenu. If a number is shown on the hand: The number tells you how many times you have to touch the touchbutton briefly in succession to navigate to a particular function.

Symbol	Description
	Touch the touchbutton with your finger for 3 seconds: Switch on the device. In the main menu: Switch off the device. In the submenu: Switch to the main menu. Deactivate active function of the submenu.
	Touch the touchbutton with your finger for 7 seconds: In the main menu: Open the submenu.
	Arrow with clock: It takes more than 10 seconds for the following message to appear in the display.
	Arrow with a time indication: It takes the specified amount of time until the following message appears in the display.

4.2 Menus

The device functions can be found in various menus.

Menu	Description
Main menu	When you switch the device on, you are automatically in the main menu. From here, navigate to device functions and the submenu.
Submenu	The submenu contains additional device functions for setting up your device.

4.2.1 Main menu

In the main menu, it is possible to activate/deactivate the following functions:

LED	Description
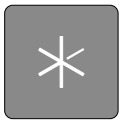	SuperCool
	Temperature 3 °C
	Temperature 5 °C
	Temperature 7 °C
	Temperature 9 °C

Meaning of the LEDs in the main menu

4.2.1 Opening the submenu

When you switch the device on, you are automatically in the main menu.

If you are in the submenu and want to switch to the main menu:

▶ Carry out action steps (see 4.2.2 Exiting the submenu) .

4.2.1 Navigating in the main menu

If you navigate in the main menu, LED 5 is followed by LED 1 again.

Fig. 65

▶ Touch the touchbutton briefly until the LED of the desired function lights up.

▷ Function is activated.

4.2.1 Sleep mode of the display

If you do not touch the touchbutton in the main menu for 10 seconds, the display switches to sleep mode. Sleep mode prevents you from adjusting the temperature by accidentally touching the touchbutton.

Ending sleep mode:

Fig. 66

▶ Briefly touch the touchbutton.

▷ Confirmation tone sounds.

▷ Set temperature flashes once.

▷ Sleep mode is ended.

4.2.2 Submenu

In the submenu, the following functions can be activated/deactivated:

LED	Description	LED position
	Input lock	LED 1
	SabbathMode	LED 2
	Resetting to factory settings	LED 3

Meaning of the LEDs in the submenu

4.2.2 Opening submenu

Fig. 67

▶ Carry out the steps as shown in the illustration until you hear a double confirmation tone after 7 seconds.
▷ LEDs 1-5 light up: You are in the submenu.
▷ If you do not perform any action on the display for 5 seconds, the display returns to the main menu.

4.2.2 Exiting the submenu

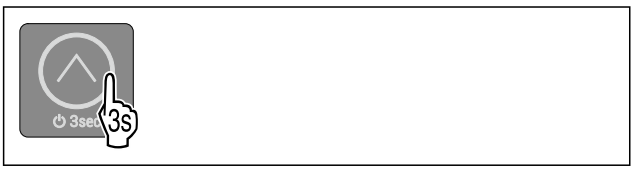

Fig. 68

▶ Carry out action steps according to the illustration.

-or-

▶ Do not touch the touchbutton for 5 seconds.

▷ You are in the main menu.

4.2.2 Navigating in the submenu

If you navigate in the submenu, LED 1 follows the LED of the last function in the submenu.

Fig. 69

▶ Touch the touchbutton briefly until the LED of the desired function lights up.
▷ After 5 seconds without interaction, selected function is automatically activated.

5 Putting into operation

5.1 Switching on device (first use)

Make sure that the following requirements are fulfilled:

❑ The device is properly installed and connected according to the installation instructions.
❑ All adhesive strips, adhesive and protective films and transport locks are removed from inside and on the device.
❑ All marketing leaflets are removed from the drawers.
❑ You are familiar with the functionality of the display. (see 4 Functionality of the display)

Switching on the device:

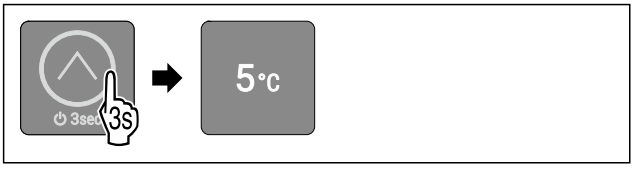

Fig. 70

▶ Touch the touchbutton as shown in the illustration for 3 seconds until you hear the confirmation tone.
▷ The device is switched on.
▷ Interior lighting is activated.
▷ LED 3 lights up: Temperature is set to 5 °C at the factory.
▷ The device cools to the target temperature set at the factory.

Device starts in demo mode:

When the device starts in demo mode:
▶ Deactivating demo mode. (see Deactivating demo mode)

Display switches to sleep mode:

When the display switches to sleep mode:
▶ Briefly touch the touchbutton. (see 4.2.1 Sleep mode of the display)

Note
The manufacturer recommends:
▶ Stock with food: Wait for around 6 hours until the set temperature is reached.
▶ **Store frozen foods** at -18 °C or colder.*
▶ Observe the notes on storing food. (see 6.1 Information regarding storage)

Note
Accessories can be purchased from the Liebherr-Hausgeräte store at go.liebherr.com/47wtc4.

6 Storage

6.1 Information regarding storage

WARNING
Fire hazard from electrical appliances!
If you use electrical appliances in the food area of your appliance, they can cause a fire.
▶ Do not use electrical appliances in the food area of the appliance unless recommended by the manufacturer.

Note
The energy consumption increases and the cooling power goes down if ventilation is not sufficient.
▶ Always keep air slots clear.

Observe the following specifications for storage:

- Keep the air vents on the fan free.*
- In the freezer compartment: Package food properly.*
- Package or cover foods that readily take on or give off odours or taste in closed containers.
- Keep liquids in closed containers.
- Leave space between goods to ensure good air circulation.
- Store food according to the instructions on the packaging.
- Always observe the best-before date indicated on the packaging.

Note
Failure to follow these guidelines can lead to foodstuffs spoiling.

6.2 Fridge compartment

6.2.1 Arranging your food properly

▶ Upper area and door: Store butter, cheese, tinned food and tubes.
▶ Bottom shelf: Store particularly perishable foods such as ready meals, fish, meat and sausage products.

▶ Universal box: Store small jars, tubes, chocolate, eggs, packaged fruit and vegetables.

6.3 4-star freezer compartment*

Here, a dry, frosty storage climate is created at -18 °C. The frosty storage climate is suitable for storing frozen food for several months, for making ice cubes or freezing fresh food.

The air temperature in the freezer compartment, measured with a thermometer or other measuring device, may fluctuate. Temperature fluctuations are greater in a half-full or empty freezer and it is possible to attain temperatures warmer than -18 °C.

6.3.1 Freezing food

The maximum amount of fresh food that you can freeze within 24 hours is specified on the type plate (see 11.5 Model plate) under “Freezing capacity ... kg/24h”.

To ensure that food quickly freezes through, adhere to the following quantities per package:

- Fruit and vegetables up to 1 kg
- Meat up to 2.5 kg

Arranging your food properly

CAUTION
Risk of injury due to broken glass!
Bottles and cans containing drinks may burst when being frozen. This applies particularly to sparkling drinks.
▶ Do not freeze bottles and cans containing drinks!

▶ Place packaged food in the freezer compartment.

Defrosting food

WARNING
Risk of food poisoning!
▶ Do not re-freeze thawed food.
▶ Use defrosted foodstuff as soon as possible.

You can defrost food in several ways:

- In the fridge compartment
- In the microwave
- In the oven/fan-assisted oven
- At room temperature

▶ Take out only as much food as necessary.

6.4 Storage times

Refer to the specified storage times as a guide.

In the case of foods with a minimum shelf life, the date indicated on the packaging still applies.

6.4.1 Fridge section

Always follow the best-before date stated on the packaging.

6.4.2 Freezer compartment*

Recommended shelf-lives for various types of food		
Ice cream	at -18 °C	2 to 6 months
Cold cuts, ham	at -18 °C	2 to 3 months
Bread, baked goods	at -18 °C	2 to 6 months
Game, pork	at -18 °C	6 to 9 months
Fatty fish	at -18 °C	2 to 6 months
Lean fish	at -18 °C	6 to 8 months
Cheese	at -18 °C	2 to 6 months
Poultry, beef	at -18 °C	6 to 12 months
Vegetables, fruit	at -18 °C	6 to 12 months

7 Saving energy

- Pay attention to good ventilation. Do not cover ventilation holes or grids.
- Always keep the fan air slits clear.*
- Do not install the appliance in direct sunlight or near radiators or similar sources of heat.
- If the appliance is installed directly next to an oven, the energy consumption may increase slightly. This is dependent on the service life and usage intensity of the oven.
- Energy consumption depends on the installation conditions, e.g. the ambient temperature . A warmer ambient temperature can increase the energy consumption.
- Open the appliance for as short a time as possible.
- The lower the temperature is set the higher the energy consumption.
- Only take food out for as long as necessary so that it doesn’t warm up too much.
- Inserting warm food: allow to cool down to room temperature first.
- Thaw frozen food in the refrigerator.*
- If there is a thick layer of frost in the appliance: defrost the appliance.*

8 Controls

8.1 Operating controls and display elements

The display provides a quick overview of the current status of the appliance, the temperature setting, the status of functions and messages.

You operate your appliance with the touchbutton.

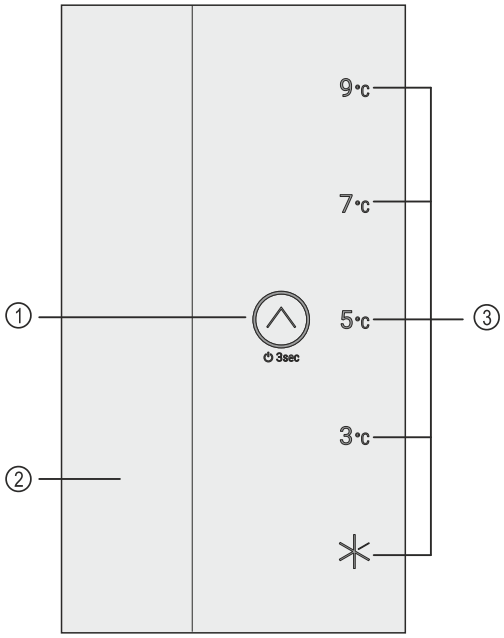

* Depending on model and options

Fig. 71 Example illustration: Display

(1) Touchbutton (operating control)
(2) Interior lighting
(3) Temperature display/ Status indicator

8.1.1 Temperature display/Status indicator

The temperature display/status indicator consists of five LEDs:

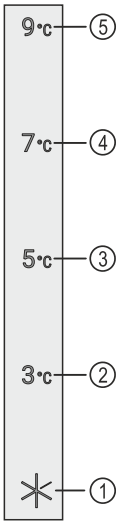

Fig. 72 Example illustration

(1) LED 1
(2) LED 2
(3) LED 3
(4) LED 4
(5) LED 5

The LEDs indicate temperature settings (see 4.2.1 Main menu) in the main menu and functions in the submenu (see 4.2.2 Submenu) .

8.1.2 LED behaviour

You can recognise the status of the device by the light up or flashing of the LEDs:

LED behaviour (example illustration)	Description
	LED does not light up: LED is not selected. Function is not active.
	LED lights up: LED is selected or function is active.
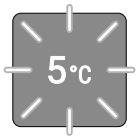	**Several LEDs flash simultaneously:** An error has occurred. (see 8.3 Messages)

LED behaviour

8.1.3 Audible signals

An audible signal sounds in the following cases:

Audible signal	Description
Confirmation tone	Sounds when the touchbutton is touched.
Alarm tone	Sounds when an error occurs. (see 8.3 Messages)
Error tone	Sounds when the touchbutton is touched, but the interaction is not possible.

8.2 Appliance functions

8.2.1 Notes on the appliance functions

The appliance functions are set at the factory so that your appliance is fully functional.

Before you alter, activate or deactivate the device functions, make sure that the following requirements are met:

- ❑ You have read and understood the descriptions of how the display works. (see 4 Functionality of the display)
- ❑ You have familiarised yourself with the operating and display elements of your appliance. (see 8.1 Operating controls and display elements)

Switching the appliance off and on

Use this function to switch the entire appliance off and on.

Switching off the device

When you switch the appliance off, then the previously saved settings are saved.

Make sure that the following requirements are fulfilled:

- ❑ Handling instructions (see 12 Shutting down) are carried out.
- ❑ You are in the main menu. (see 4.2.2 Exiting the submenu)

Fig. 73

- ▶ Carry out the action steps according to the illustration until you hear the confirmation tone.
- ▷ LEDs of the display no longer light up.
- ▷ Interior lighting is deactivated.
- ▷ Device is switched off.

Switching on the device

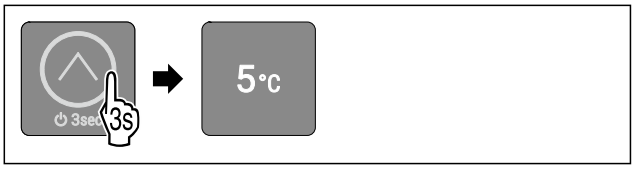

Fig. 77 Example illustration: On appliances without a SmartModule

- ▶ Carry out the action steps according to the illustration until you hear the confirmation tone.
- ▷ The device is switched on.
- ▷ Interior lighting is activated.
- ▷ During first use: The appliance cools to the target temperature set at the factory.
- ▷ If the device has been in operation before: The appliance cools to the target temperature set previously.

Temperature

Use this function to set the temperature.

The temperature depends on the following factors:

- Frequency of door opening
- Duration of door opening
- Room temperature of the installation site
- Type, temperature and quantity of food

Recommended setting: 4 °C

Setting the temperature

The function is located in the main menu on the positions of LEDs 2-5.

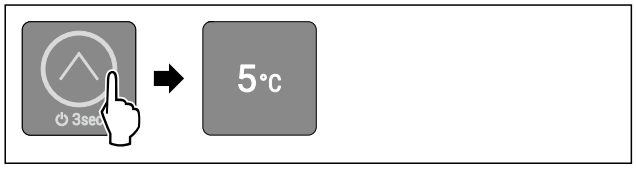

Fig. 79 Example illustration

▶ Briefly touch the touchbutton as shown until the desired temperature lights up.
▷ Temperature is set.
▷ The device cools to the target temperature set.

SuperCool

You can use this function to activate or deactivate SuperCool. If SuperCool is activated, then the appliance increases the cooling capacity. It allows you to achieve lower cooling temperatures. You can activate SuperCool when you would like to cool a large quantity of food quickly.

If SuperCool is activated, then lower temperatures are reached in the **** freezer compartment. You can activate SuperCool when you would like to freeze food in the **** freezer compartment.*

Activating SuperCool

The function is located in the main menu at the position of LED 1.

Time for activation of the function:

- When you would like to store fresh food in the fridge section: Activate the function when inserting food.

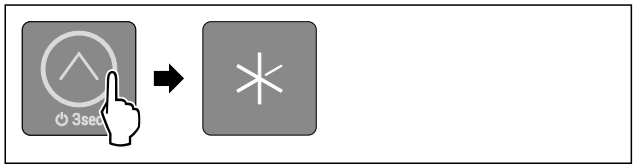

Fig. 80

▶ Briefly touch the touchbutton as shown until LED 1 lights up.
▷ LED 1 lights up: SuperCool is activated.
▷ The device cools to the target temperature.

Deactivating SuperCool

SuperCool is deactivated automatically after 18 hours.

However, you can also deactivate SuperCool manually at any time by setting a temperature:

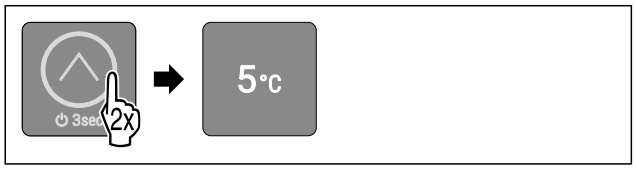

Fig. 81 Example illustration

▶ Briefly touch the touchbutton as shown until the desired temperature lights up.
▷ Temperature is set and SuperCool is deactivated.
▷ The appliance continues to run in normal mode.
▷ The device cools to the target temperature set.

SabbathMode

With this function you activate or deactivate the SabbathMode. If you activate this function, some electronic functions are switched off. As a result, your device meets the religious requirements for Jewish holidays such as Sabbath and complies with STAR-K Kosher certification.

Device status when SabbathMode is active
LEDs 1-5 light up.
All functions in the display are locked except for the **Deactivating SabbathMode function**.
Active functions remain active.
The interior lighting is deactivated.
Messages are not displayed.
There is no door alarm.
After a power failure, the device returns to SabbathMode.

Device status

Note

This appliance has certification from the “Institute for Science and Halacha”. (www.machonhalacha.co.il)

You can find a list of STAR-K-certified appliances at www.star-k.org/appliances.

Activating SabbathMode

WARNING

Danger of food poisoning from spoiled food!
If you have SabbathMode activated and a power failure occurs, no message appears in the status display about the power failure. Once the power is restored, the appliance continues to operate in SabbathMode. The power failure may mean that food spoils and the consumption of this food could lead to food poisoning.
After a power failure:

▶ Do not consume food that was frozen and has thawed out.

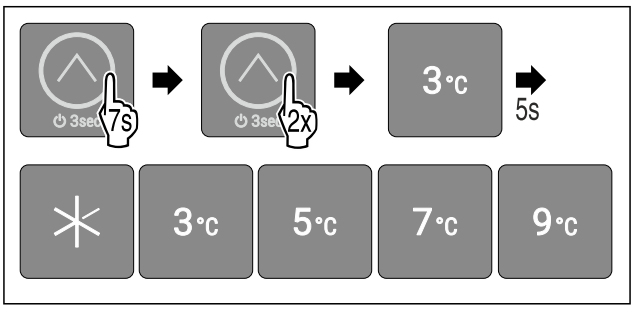

Fig. 82

▶ Carry out action steps according to the illustration.
▷ LED 2 lights up.
▷ After 5 seconds without interaction, SabbathMode is activated. LEDs 1-5 light up.

Deactivating SabbathMode

The SabbathMode is automatically deactivated after 80 hours. However, you can also deactivate SabbathMode manually at any time:

* Depending on model and options

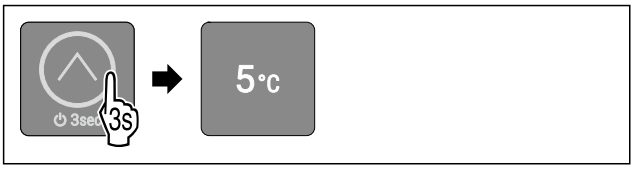

Fig. 83 Example illustration depending on the previously set temperature

▶ Carry out the action steps according to the illustration until you hear the confirmation tone.
▷ SabbathMode is deactivated.
▷ Interior lighting is activated.
▷ The device continues to run in normal mode. LED of the previously set temperature lights up.
▷ You are in the main menu.

Input lock

You can use this function to activate or deactivate the input lock. The input lock prevents the appliance being operated accidentally, e. g. by children.

Application:

- Avoid unintentional modification of functions.
- Avoid unintentional switching off of the device.
- Avoid unintentional temperature setting.

Activating the input lock

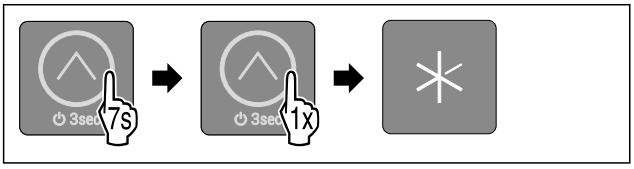

Fig. 84

▶ Carry out action steps according to the illustration.
▷ LED 1 lights up.
▷ After 5 seconds without interaction, input lock is automatically activated.

Deactivating the input lock

Fig. 85

▶ Carry out the action steps according to the illustration until you hear the confirmation tone.
▷ Input lock is deactivated.
▷ You are in the main menu.

Demo mode

Demo mode is a special feature for dealers who want to demonstrate device features. If you activate demo mode, all refrigeration functions are deactivated and you cannot open the submenu.

If you activate and then deactivate demo mode, the device will be reset to factory defaults. (see Resetting to factory settings)

Activating demo mode

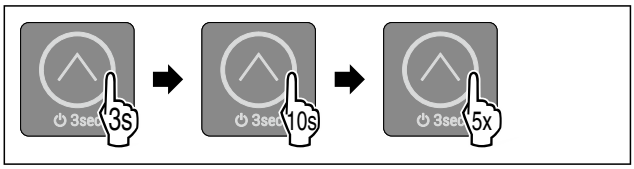

Fig. 86

▶ Touch the touchbutton as shown in the illustration for 3 seconds until you hear the confirmation tone.
▷ Device is switched off.
▶ Touch the touchbutton as shown in the illustration for 10 seconds until you hear the confirmation tone after 10 seconds.
▶ Briefly touch the touchbutton five times.
▷ All temperature LEDs light up twice for a short time: Demo mode is activated.
▷ Device is switched off.
▶ Switch on the device. (see Switching on the device)
▷ The device is in demo mode.

Deactivating demo mode

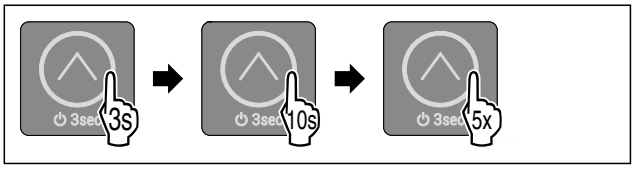

Fig. 87

▶ Touch the touchbutton as shown in the illustration for 3 seconds until you hear the confirmation tone.
▷ Device is switched off.
▶ Touch the touchbutton as shown in the illustration for 10 seconds until you hear the confirmation tone after 10 seconds.
▶ Briefly touch the touchbutton five times.
▷ All temperature LEDs light up briefly four times: Demo mode is deactivated.
▷ Device is switched off.
▶ Switch on the device. (see Switching on the device)

Resetting to factory settings

Use this function to reset all settings to factory defaults. All settings you have made so far (e.g. log-in data) are reset to their original settings.

Application:

- Reset device

Performing a reset

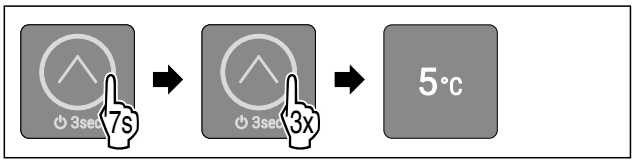

Fig. 88 Example illustration

▶ Carry out action steps according to the illustration.
▷ LED 3 lights up.
▷ After 5 seconds without interaction, the appliance is reset.
▷ Appliance is switched off.
▶ Switch on the appliance. (see 5.1 Switching on device (first use))
▷ Log-in data is reset.

8.3 Messages

Messages are indicated audibly by an alarm tone and visually by the LEDs flashing in the display. Different LEDs flash depending on the type of message.

You can end the following messages yourself. For all other messages, you must contact the customer service. (see 11.4 Customer Service)

Message	Cause	Exit the message
The alarm tone sounds at an ever-increasing volume. Interior lighting pulses. **Door alarm**	The message appears if the door is open for more than 60 seconds.	Carry out action steps (see Door alarm) .

Overview of messages

8.3.1 Ending messages

Door alarm

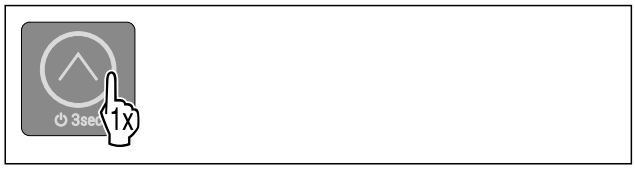

Fig. 89

▶ End alarm: Carry out action steps according to the illustration.

-or-

▶ Close the door.

▷ Alarm has ended.

▷ If the door is not closed: Message appears again after 3 minutes.

9 Features

9.1 4-star freezer compartment*

9.1.1 Opening the 4-star freezer compartment

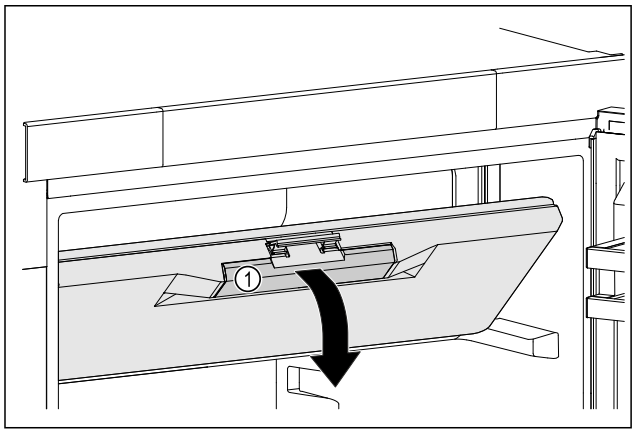

Fig. 90

▶ Hold the freezer compartment door by the recessed handle *Fig. 90 (1)*.

▶ Pull the freezer compartment door down and forward.

▷ Freezer door is open.

9.1.2 Closing the 4-star freezer compartment

▶ Close the freezer compartment door.

▶ Press on the freezer compartment door at the front until it engages.

▷ Freezer compartment door is closed.

9.2 Door rack

Door racks are suitable for storing drinks and food. You can move door racks for your own individual use and take them apart for cleaning. However, Liebherr recommends using the door racks in the position in the door as delivered from the factory.

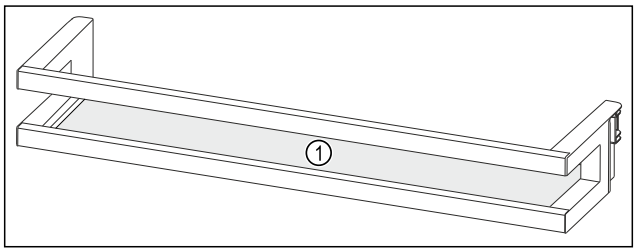

Fig. 91 Example illustration, Door rack

(1) Shelf

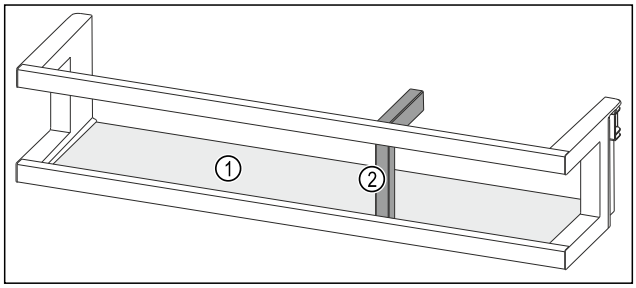

Fig. 92 Example illustration, Door rack with bottle holder

(1) Shelf **(2)** Bottle holder

The following table shows examples of what can be stored in each door rack.

Door rack	Food
Door rack (see Fig. 91)	Butter, cheese, tinned food, tubes
Door rack with bottle holder (see Fig. 92)	Bottles The sliding bottle holder secures the bottles in the door rack.

9.2.1 Removing the door rack

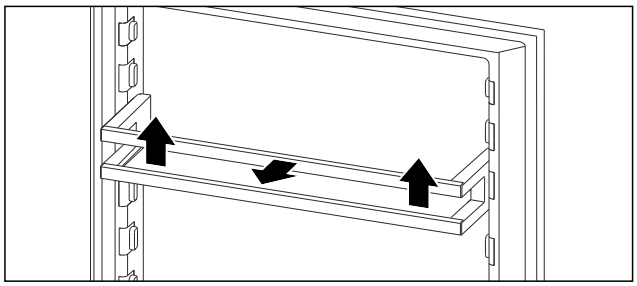

Fig. 93 Example illustration

▶ Push the door rack upwards.

▶ Pull the door rack forward.

9.2.2 Inserting the door rack

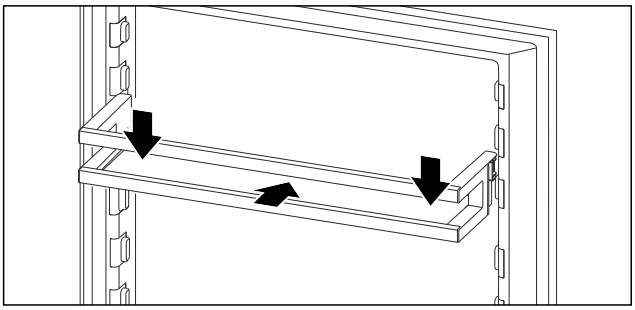

Fig. 94 Example illustration

▶ Slide in the door rack.
▶ Press the door rack down.

9.3 Shelves

There are different storage areas depending on the type of appliance:

- Single-piece shelf

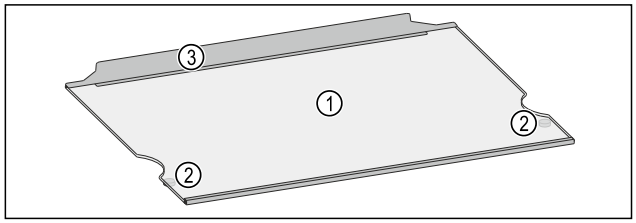

Fig. 95 Example illustration, Shelf with stop edge

(1) Shelf
(2) Drawer stop
(3) Stop edge

9.3.1 Using shelves

The shelves can either be adjusted in height, or removed completely or for cleaning.

Ensure that the following requirements are met:

❑ Shelves are empty.

Removing the shelf

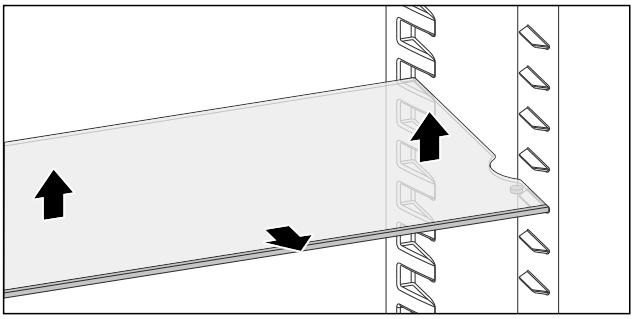

Fig. 96

▶ Raise the shelf.
▶ Pull out the shelf forwards.

-or-

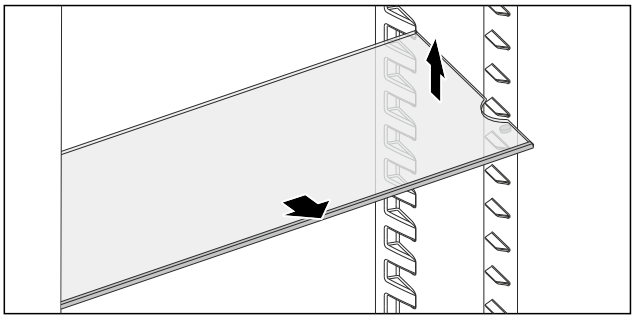

Fig. 97

▶ Easier removal: Tilt the shelf and pull it out forwards.

▷ Shelves have been removed.
▷ The shelves can be positioned at a different height.

Inserting the shelf

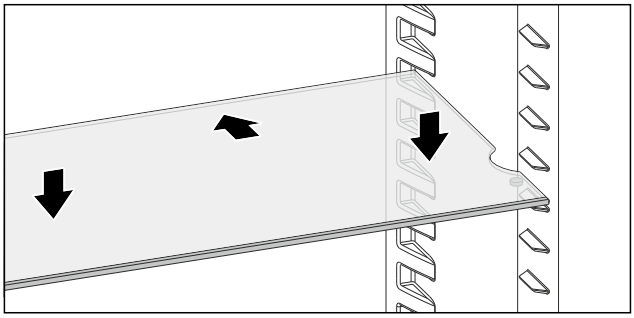

Fig. 98

When the drawer stop points downwards:

▶ Pull the shelf out as far as it will go.
▶ Lower the shelf.

-or-

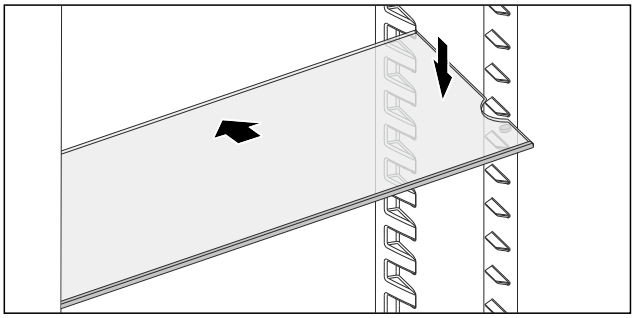

Fig. 99

▶ Slide the shelf in at an angle and lower it.

▷ The drawer stops are located behind the front support surface.

9.4 Drawers

You can remove the drawers for cleaning.

The way to remove/insert the drawers varies depending on the pull-out system. Your appliance can contain various pull-out systems.

Note
The energy consumption increases and the cooling power goes down if ventilation is not sufficient.
▶ Always keep the inside vents at the rear wall clear.

9.4.1 Drawer on appliance base or glass shelf

The drawer runs directly on the appliance base or on a glass shelf. There are no rails.

Removing drawer

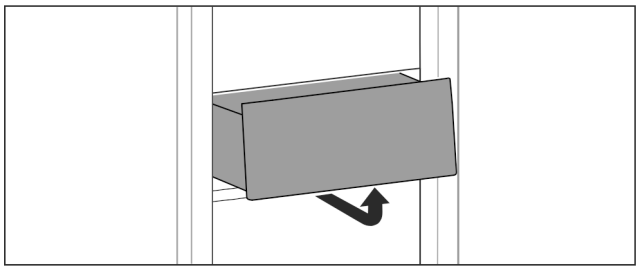

Fig. 100

▶ Remove drawer as shown in the illustration.

Inserting drawer

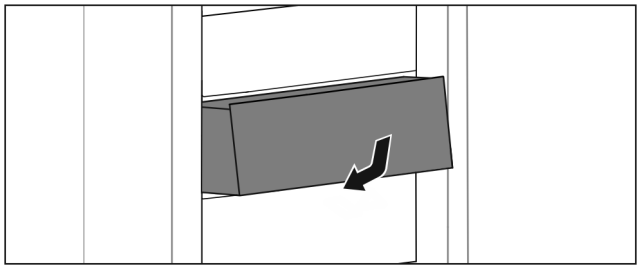

Fig. 101

▶ Insert drawer as shown in the illustration.

9.5 Bottle holder

9.5.1 Using the bottle holder

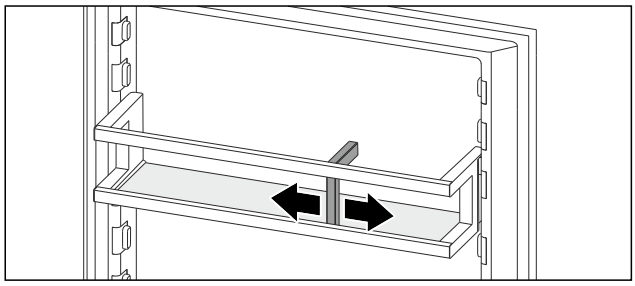

Fig. 102

▶ Push the bottle holder onto the bottles.

▷ The bottles are prevented from falling over.

10 Maintenance

10.1 FreshAir carbon filter*

The FreshAir carbon filter is in the compartment above the fan.

It guarantees the best air quality.

- ❑ Replace the carbon filter every 6 months.
- ❑ The carbon filter can be disposed of with the regular household waste.

Note
FreshAir activated charcoal filters can be purchased from the Liebherr-Hausgeräte store at go.liebherr.com/47wtc4.

10.1.1 Removing the FreshAir carbon filter

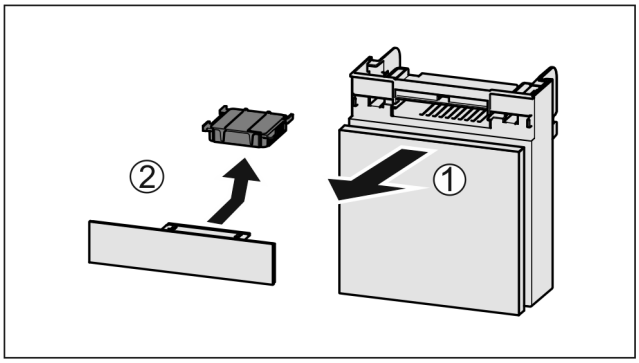

Fig. 103

▶ Pull out the compartment *Fig. 103 (1)*.

▶ Remove the carbon filter *Fig. 103 (2)*.

10.1.2 Inserting the FreshAir carbon filter

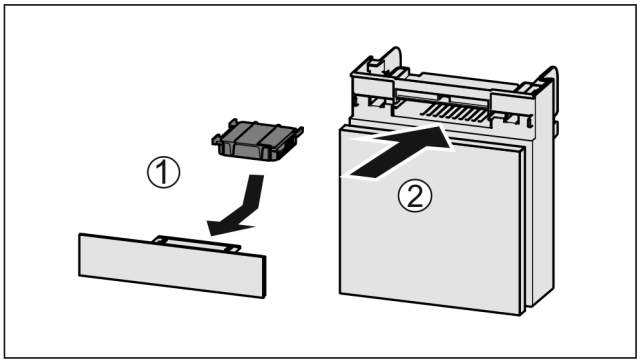

Fig. 104

▶ Insert the carbon filter as shown in the diagram *Fig. 104 (1)*.

▷ The carbon filter clicks into place.
If the carbon filter is pointing downwards:

▶ Push the compartment in *Fig. 104 (2)*.

▷ The carbon filter is now ready for use.

10.2 Removing / inserting the bottle holder

10.2.1 Removing the bottle holder

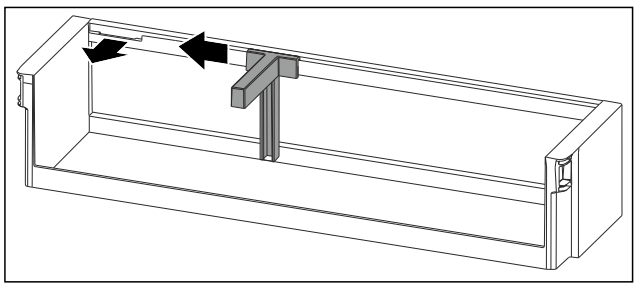

Fig. 105

▶ Slide the bottle holder to the side as far as the recess.

▶ Remove the bottle holder forwards.

* Depending on model and options

10.2.2 Inserting the bottle holder

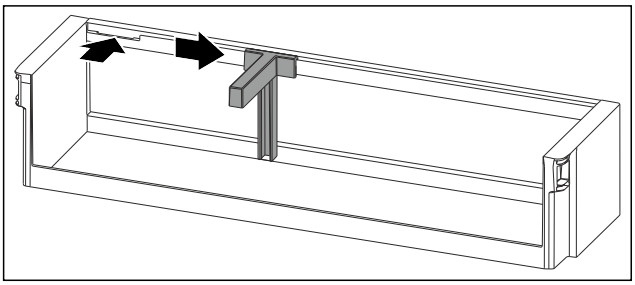

Fig. 106

▶ Insert the bottle holder in the recess.
▶ Push the bottle holder to the desired position to the side.

10.3 Disassembling / assembling pull-out systems

10.3.1 Notes on disassembly

You can disassemble some of the pull-out systems for cleaning. Your appliance can contain a variety of pull-out systems.

The following pull-out systems can be disassembled or cannot be disassembled:

Pull-out system	can be disassembled / cannot be disassembled
Drawer on appliance base or glass shelf	cannot be disassembled

10.4 Defrosting the appliance

WARNING
Improper defrosting of the appliance!
Injuries and damage.
▶ Do not use mechanical equipment or other methods to speed up the defrosting process other than those recommended by the manufacturer.
▶ Do not use electrical heating or steam-cleaning appliances, naked flames or defroster sprays to defrost.
▶ Do not use sharp objects to remove ice.

Defrosting is performed automatically. The water from the thawing process drains through the outlet and evaporates.

Water drops or a thin layer of frost or ice can form on the back wall; this is a completely normal part of the appliance's function. This must not be removed.

▶ Clean the drain opening at regular intervals. (see 10.6 Cleaning the appliance)

10.5 Defrosting the freezer compartment manually*

A layer of frost or ice forms after prolonged use.

The following factors promote the formation of frost or ice:

- The appliance is opened frequently.
- Hot food is put in.

▶ Switch the appliance off.
▶ Pull the mains plug out of the socket or switch the fuse off.
▶ Wrap the frozen food in newspaper or blankets and store in a cool place.

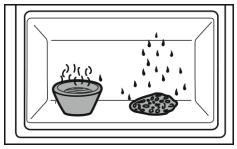

▶ Place a saucepan of hot but not boiling water in the freezer compartment.
▷ This speeds up the defrosting process.
▶ Leave the compartment and appliance door open during defrosting.
▶ Remove loosened pieces of ice.
▶ Soak up the melted ice water with a sponge or cloth several times as necessary.
▶ Clean the appliance. (see 10.6 Cleaning the appliance)

10.6 Cleaning the appliance

10.6.1 Preparation

WARNING
Danger of electric shock!
▶ Remove the refrigerator connector or interrupt the power supply.

WARNING
Danger of fire!
▶ Do not damage the refrigeration circuit.

▶ Empty the appliance.
▶ Unplug the mains plug.

10.6.2 Cleaning the interior

NOTICE
Improper cleaning!
Damage to the appliance.
▶ Only use soft cleaning cloths and ph-neutral all-purpose cleaners.
▶ Do not uses abrasive sponges or steel wool which may cause scratches.
▶ Do not use any sharp or abrasive cleaning agents, nor any that contain sand, chloride or acid.

▶ Plastic surfaces: clean by hand with a soft clean cloth, lukewarm water and a little detergent.
▶ Metal surfaces: clean by hand with a soft clean cloth, lukewarm water and a little detergent.
▶ Drain hole: remove deposits using a thin item (for example a cotton bud).

10.6.3 Clean the components

NOTICE
Improper cleaning!
Damage to the appliance.
▶ Only use soft cleaning cloths and ph-neutral all-purpose cleaners.
▶ Do not uses abrasive sponges or steel wool which may cause scratches.
▶ Do not use any sharp or abrasive cleaning agents, nor any that contain sand, chloride or acid.

Clean with a soft, clean cloth, lukewarm water and some detergent:

- Door rack
- Shelf
- Drawer

Wash in the dishwasher up to 60 °C:

- Bottle rack

▶ To disassemble components: see the relevant section.
▶ Clean the components.

10.6.4 After cleaning

▶ Wipe the appliance and the components dry.
▶ Connect and switch on the appliance.
The temperature is cold enough:
▶ Place the food inside.
▶ Repeat cleaning regularly.

11 Customer help

11.1 Technical specifications

Temperature range	
Cooling	2 °C to 9 °C

Maximum ice cube quantity / 24 hours	
Freezer compart-ment*	see type plate under “Freezing capacity .../ 24 h” *

Lighting	
Class[1]	Light source
This product contains one or more energy efficiency class G light sources.	LED

[1] *The appliance may contain light sources with different energy efficiency classes. The lowest energy efficiency class is indicated.*

11.2 Operating noise

The appliance makes different noises when it is on.

- At **higher temperatures** the appliance uses less energy but works for longer. It is **quieter**.
- With **high cooling capacity**, food is cooled more quickly. The sound is **louder**.

  Examples:
  - Functions on (see 8.2 Appliance functions)
  - Fan running*
  - Food recently added
  - High ambient temperature
  - Door open for a while

Noise	Possible cause	Type of noise
Bubbling and splashing	Coolant flowing into the cooling circuit.	Normal operating noise
Hissing	Coolant sprays into the cooling circuit.	Normal operating noise
Humming	The appliance is cooling. The volume depends on the cooling output.	Normal operating noise
Humming and rustling*	The fan is running.*	Normal operating noise*
Clicking	Components are switched on and off.	Normal switching noise
Rattling or humming	Valves or flaps are working.	Normal switching noise

Noise	Possible cause	Type of noise	Lifting
Vibration	Improper installation	Defective noise	Check the installation. Level the appliance.
Rattling	Components, items inside the appliance	Defective noise	Secure components. Leave enough space between the items.

11.3 Technical fault

Your appliance is designed and built to ensure it works reliably and has a long service life. In the unlikely event that a fault occurs during operation, please check whether it is due to an operating error. If so, you will be charged for the callout and repair costs even if it falls within the warranty period.

You can fix the following faults yourself.

11.3.1 Appliance function

Defect	Cause	Remedy
The appliance is not working.	→ The appliance is not switched on.	▶ Switch the appliance on.
	→ The power plug is not properly plugged into the socket.	▶ Check the power plug.
	→ There is something wrong with the power outlet fuse.	▶ Check the fuse.
	→ Power cut	▶ Keep the appliance closed. ▶ Safeguarding food: Place cold packs on top of food or use another freezer if the power cut lasts longer.* ▶ Do not refreeze defrosted food.*
	→ The IEC socket is not plugged into the appliance correctly.	▶ Check the IEC socket.

*** Depending on model and options**

Defect	Cause	Remedy
Temperature is not cold enough.	→ The appliance door is not closed properly.	▶ Close the appliance door.
	→ Not enough ventilation.	▶ Keep ventilation grille clear, and clean it.
	→ The ambient temperature is too high.	▶ Problem solution: (see 1.8 Climate classes)
	→ The appliance was opened too many times or for too long.	▶ Wait to see if the required temperature corrects itself. If not, contact Customer Service. (see 11.4 Customer Service)
	→ The temperature is set incorrectly.	▶ Turn down the temperature and check after 24 hours.
	→ The appliance is too close to a heat source (oven, radiator, etc).	▶ Move the appliance or the heat source.
	→ The appliance was not correctly installed in the recess.	▶ Check if the appliance was installed correctly and that the door closes properly.
The door seal is defective or needs to be replaced for another reason.	→ The door seal can be replaced. It can be replaced without the need for special tools.	▶ Contact Customer Service. (see 11.4 Customer Service)
The appliance builds up too much ice or condensa-tion.	→ The door seal may have slipped out of its groove.	▶ Check that the door seal is well fitted in the groove.

11.3.2 Features

Defect	Cause	Remedy
The internal light does not come on.	→ The appliance is not switched on.	▶ Switch the appliance on.
	→ The door was open for longer than 15 minutes.	▶ Interior lighting switches off automatically after about 15 minutes when the door is open.
	→ The LED interior light is faulty or the lid is damaged.	▶ Contact Customer Service. (see 11.4 Customer Service)
The freezer compartment cannot be closed.*	→ The lock is on when the door is open.	▶ Use the handle again.

11.4 Customer Service

First check whether you can rectify the fault yourself (see 11 Customer help) . If you cannot rectify the problem, contact Customer Service.

You can find the address in the enclosed brochure “Liebherr-Service” or at home.liebherr.com/service.

WARNING
Unprofessional repair!
Injuries.
- ▶ Have any repairs and action - not expressly specified - on the appliance and mains cable carried out by service personnel only. (see 10 Maintenance)
- ▶ A damaged mains cable may only be replaced by the manufacturer, the manufacturer’s Customer Service or a similarly qualified person.
- ▶ In the case of appliances with an IEC connector, the change may be made by the customer.

11.4.1 Contacting Customer Service

Make sure that the following appliance information is available:

- ❑ Appliance designation (model and index)
- ❑ Service no. (Service)
- ❑ Serial no. (S no.)

- ▶ Refer to the type plate for device information. (see 11.5 Model plate)
- ▶ Note down the appliance information.
- ▶ Notify customer service: Report errors and the appliance information.
- ▷ This will help us to provide you with a faster, more accurate service.
- ▶ Follow further instructions from Customer Service.

11.5 Model plate

The type plate is located on the bottom inside of the machine.

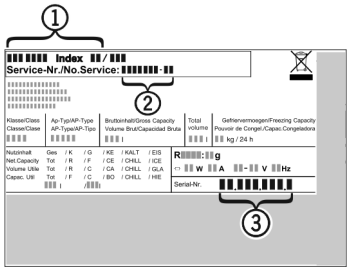

Fig. 107

(1) Appliance description **(3)** Serial no.
(2) Service no.

▶ Note the data on the model plate.

12 Shutting down

▶ Empty the appliance.
▶ Switch off appliance. (see Switching the appliance off and on)
▶ Pull the mains plug out of the socket.
▶ Remove the IEC socket if required: Pull the IEC socket out of the appliance plug and move it to the left and right at the same time.
▶ Clean appliance. (see 10.6 Cleaning the appliance)
▶ Leave the door open, so that no unpleasant odours arise.

13 Disposal

Ensure that the following requirements are met:

❑ Meaning of the symbols on the appliance: are familiar.
❑ Notes on disposal are familiar. (see 1.6 Information concerning disposal)

13.1 Preparing the appliance for disposal

▶ Shutting your appliance down. (see 12 Shutting down)

13.2 Disposing of the appliance in an environmentally friendly manner

WARNING
Risk of fire due to leaking refrigerant and oil!
The refrigerant inside the appliance is environmentally friendly, but flammable. The oil it contains is also flammable. Escaping refrigerant and oil can ignite in high concentrations and in contact with an external heat source.
▶ Do not damage the refrigerant circuit pipes or the compressor.

▶ Observe the notes on transporting the appliance. (see 3.5 Transporting the appliance)
▶ Remove the appliance without damaging it.
▶ Dispose of appliance according to specifications.

Scan QR Code and find digital operating and installation instructions.

home.liebherr.com

20261006 7083978-00

Liebherr-Hausgeräte GmbH
Memminger Straße 77-79
88416 Ochsenhausen
Deutschland