User Guide

Quality, Design and Innovation

home.liebherr.com/fridge-manuals

LIEBHERR

Contents

1 Appliance at a glance ... 3
1.1 Scope of delivery ... 3
1.2 Overview of the appliance and equipment ... 3
1.3 SmartDevice ... 4
1.4 Appliance range of use ... 4
1.5 Conformity ... 4

2 General safety instructions ... 4

3 Functionality of the Touch & Swipe display ... 6
3.1 Navigation and symbol explanation ... 6
3.2 Menus ... 6
3.3 Sleep mode ... 7

4 Putting into operation ... 7
4.1 Switching on appliance (first use) ... 7
4.2 Starting the IceMaker for the first time* ... 7
4.3 Starting the EasyTwist-Ice for the first time* ... 8

5 Storage ... 8
5.1 Information regarding storage ... 8
5.2 Fridge compartment ... 8
5.3 EasyFresh ... 8
5.4 Freezer compartment ... 8
5.5 Storage times ... 9

6 Saving energy ... 9

7 Controls ... 9
7.1 Controls and displays ... 9
7.1.1 Status display ... 9
7.1.2 Display symbols ... 9
7.2 Appliance functions ... 9
7.2.1 Notes on the appliance functions ... 9
Turn off appliance ... 10
7.2.3 Switching temperature zones off and on ... 10
WiFi ... 10
Temperature ... 11
Temperature unit ... 12
D-Value ... 12
SuperCool ... 12
PowerCool ... 13
VarioTemp ... 13
SuperFrost ... 14
Start defrosting cycle ... 14
PartyMode ... 14
HolidayMode ... 15
SabbathMode ... 15
EnergySaver ... 16
IceMaker / MaxIce * ... 16
IceMaker water supply* ... 17
TubeClean * ... 18
CleaningMode ... 18
Display brightness ... 18
Door alarm ... 19
Input lock ... 19
Language ... 19
Device information ... 20
Software ... 20
Reminder ... 20
Demo mode ... 20
Resetting to factory settings ... 21
7.3 Fault messages ... 21
7.3.1 Warnings ... 21
7.3.2 Message ... 22

8 Features ... 22
8.1 Door rack ... 22
8.2 Shelves ... 23
8.3 Dividing shelf ... 23
8.4 VarioSafe ... 24
8.5 Drawers ... 26
8.6 EasyFresh-Safe cover ... 26
8.7 Adjusting the moisture levels ... 27
8.8 Glass shelves ... 27
8.9 EasyTwist-Ice* ... 27
8.10 IceMaker* ... 28
8.11 VarioSpace ... 29
8.12 Butter dish ... 29
8.13 Egg rack ... 29
8.14 Bottle holder ... 30
8.15 Freezer pack ... 30
8.16 Ice cube tray with cover* ... 30
8.17 Flexible ice compartment divider* ... 30

9 Maintenance ... 31
9.1 FreshAir carbon filter ... 31
9.2 Disassembling / assembling pull-out systems ... 31
9.3 Defrosting the appliance ... 31
9.4 Cleaning the appliance ... 32

10 Customer help ... 35
10.1 Technical specifications ... 35
10.2 Operating noises ... 35
10.3 Technical fault ... 35
10.4 Customer Service ... 36
10.5 Model plate ... 37

11 Shutting down ... 37

12 Disposal ... 37
12.1 Preparing appliance for disposal ... 37
12.2 Disposing of the appliance in an environmentally friendly manner ... 37

The manufacturer is continually working on the further development of all types and models. Please be aware that

*** Depending on model and options**

we reserve the right to make changes to the shape, equipment and technology.

Symbol	Explanation
	Read instructions Please read the information in these instructions carefully to understand all of the benefits of your new appliance.
	Full instructions on the internet You can find detailed instructions on the internet using the QR code on the front of these instruction or by entering the service number at **home.liebherr.com/fridge-manuals**. The service number can be found on the serial tag: 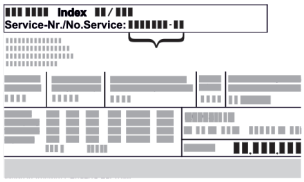 *Fig.* Example illustration
	Check appliance Check all parts for transport damage. If you have any complaints, please contact your agent or customer service.
	Differences These instructions apply to a range of models, so differences are possible. Sections that apply to certain models only are marked with an asterisk (*).
	Instructions and results Instructions are marked with a ▶. Results are marked with a ▷.
	Videos Videos about the appliances are available on the YouTube channels of Liebherr-Hausgeräte.

These operating instructions apply to:

CN ...	52.. / 57.. / 77.. (i)
SCN ...	52..

Note
If your appliance has an N in its appliance designation, it is a NoFrost appliance.

1 Appliance at a glance

1.1 Scope of delivery

Check all parts for transport damage. Contact your dealer or customer service in the event of complaints. (see 10.4 Customer Service)

Your new appliance comes with the following parts:
- Standalone appliance
- Features (depending on the model)
- Installation materials (depending on the model)
- “Quick Start Guide”
- “Installation Guide”

1.2 Overview of the appliance and equipment

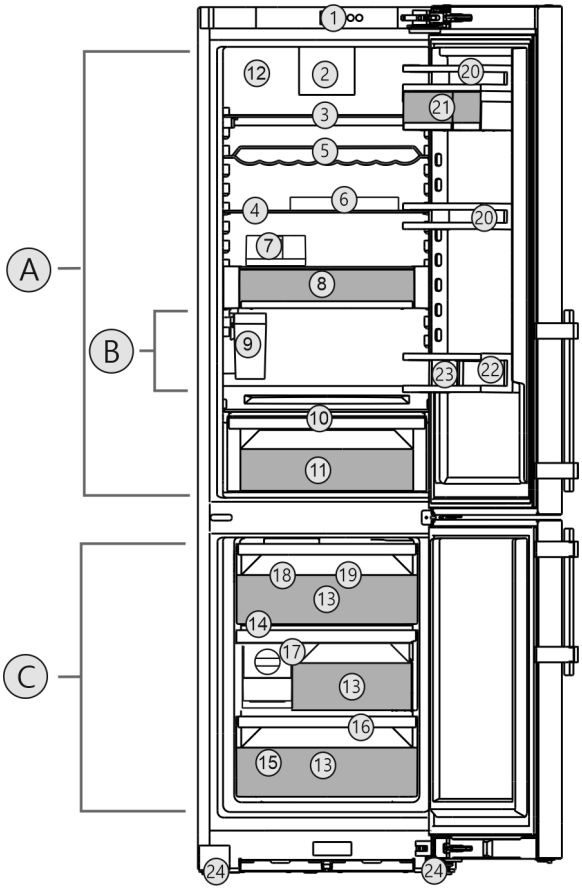

Fig. 1 Example illustration

Temperature range

(A) Fridge compartment
(B) Coldest zone
(C) Freezer compartment

Equipment

(1) Controls
(2) Fan with FreshAir activated charcoal filter
(3) Separable storage shelf
(4) Storage shelf*
(5) Bottle shelf
(6) Egg tray
(7) Butter dish
(8) VarioSafe
(9) IceMaker water tank*
(10) Lid for EasyFresh-Safe
(11) EasyFresh-Safe
(12) Dry rear wall
(13) Freezer compartment
(14) VarioSpace
(15) Serial tag
(16) Outlet
(17) EasyTwist-Ice*
(18) IceMaker*
(19) Cold storage accumulators
(20) Door shelf
(21) VarioBox
(22) Bottle rack
(23) Bottle holder
(24) Adjustable feet and the front, transport castors at the rear, carrying handle at the top (rear) and at the bottom (front)

Note
▶ Shelves, drawers and baskets are arranged for optimum energy efficiency when the appliance is delivered. Changing how the shelves, for example, are inserted in the fridge compartment does not have any impact on energy consumption.

1.3 SmartDevice

SmartDevice is the networking solution for your fridge-freezer.

If your appliance SmartDevice-enabled or compatible, you can quickly and easily connect your appliance to your WiFi. With the SmartDevice app, you can operate your appliance from a mobile device. Additional functions and setting options are available in the SmartDevice SmartDevice app.

SmartDevice-compatible appliance:	Your appliance is compatible for use with the SmartDeviceBox. You must first purchase and install the SmartDeviceBox. In order to connect your appliance to the WiFi, you need to download the SmartDevice app.
More information about SmartDevice:	**smartdevice.liebherr.com**
Purchasing the SmartDeviceBox in the Liebherr-Hausgeräte store:	**home.liebherr.com/shop/de/deu/smartdevicebox.html**
Downloading the SmartDevice app:	After installing and configuring the SmartDevice, you can connect your appliance to the WiFi using the SmartDevice app and the WiFi appliance function (see WiFi) .

Note
The SmartDevice function is not available in the following countries: Russia, Belarus, Kazakhstan.

You cannot use the SmartDeviceBox.

1.4 Appliance range of use

Intended use

The appliance is only suitable for cooling food products in a domestic or household-like environment. This includes, for example, use:

- in staff kitchens, bed and breakfast establishments,
- by guests in country houses, hotels, motels and other accommodation,
- for catering and similar services in the wholesale trade.

The appliance is not suitable as a built-in unit.

All other types of use are not permitted.

Foreseeable misuse

The following applications are expressly forbidden:

- Storing and refrigerating medicines, blood plasma, laboratory preparations or similar substances and products based on the Medical Device Directive 2007/47/EC
- Use in areas at risk of explosions

Misusing the appliance may lead to damage to the goods stored or they may spoil.

Climate classifications

Depending on the climate classification the appliance is designed to operate in restricted ambient temperatures. The climate classification applying to your appliance is printed on the rating plate.

Note
▶ Keep to the specified ambient temperatures in order to guarantee that the appliance works properly.

Climate classification	for ambient temperatures of
SN	10 °C to 32 °C
N	16 °C to 32 °C
ST	16 °C to 38 °C
T	16 °C to 43 °C
SN-ST	10 °C to 38 °C
SN-T	10 °C to 43 °C

1.5 Conformity

The refrigerant circuit has been tested for leaks. The appliance complies with the applicable safety regulations and with the corresponding directives.

The full text of the EU Declaration of Conformity is available on the following website: www.Liebherr.com

2 General safety instructions

Please keep these instructions in a safe place and pass them on to any subsequent owners.

Read these operating instructions carefully before use to ensure safe and correct use of the appliance. Follow the instructions, safety instructions and warning messages included at all times. They are important for ensuring you can operate and install the appliance safely and without any problems.

Danger for the user:

- This device can be used by children and people with impaired physical, sensory or mental abilities or with a lack of experience and knowledge provided that they are supervised or have received instruction in the safe use of this device, and about the resulting hazards. Children must not play with this appliance. Cleaning and user

* Depending on model and options

maintenance work must not be carried out by children without adult supervision. Children aged between 3 and 8 are allowed to load and unload the appliance. Children below the age of 3 must be kept away from the appliance unless they are under continuous adult supervision.
- The socket must be easily accessible so that the appliance can be disconnected quickly from the electricity in an emergency. It must not be located in the area behind the appliance.
- When disconnecting the appliance from the supply, always take hold of the plug. Do not pull the cable.
- In the event of a fault pull out the mains plug or deactivate the fuse.
- Do not damage the mains power cable. Do not operate the appliance with a defective mains power cable.
- If the supply cord is damaged, it must be replaced by a special cord or assembly available from the manufacturer or its service agent.
- Only customer service or other specially trained staff may repair or perform other operations on the appliance.
- Only assemble, connect and dispose of the appliance according to the instructions.
- Special lights, such as LED lights on the appliance, are used to illuminate the interior of the appliance and are not suitable for room lighting.

Fire hazard:

- This appliance contains a refrigerant which is environmentally friendly, but flammable. Leaking refrigerant may ignite. It is hazardous for anyone other than an Authorised Service Person to service this appliance. In Queensland, the authorised Service Person MUST hold a Gas Work Authorisation for hydrocarbon refrigerants, to carry out Servicing or repairs where the gas system is being opened or charged.
- The coolant used (information on the model plate) is ecofriendly but also flammable. Any leaking coolant may ignite.
  - Do not damage the refrigerant circuit pipes.
  - Do not handle ignition sources inside the appliance.
  - Do not use electrical appliances inside the appliance (e.g. steam cleaners, heaters, ice cream makers, etc.).
  - If the refrigerant leaks: remove any naked flames or ignition sources from the vicinity of the leakage point. Properly air the room. Inform customer services.
- Do not store explosives or sprays using combustible propellants such as butane, propane, pentane, etc. in the appliance. To identify these spray cans, look for the list of contents printed on the can, or a flame symbol. Gases possibly escaping may ignite due to electrical components.
- Keep burning candles, lamps and other items with naked flames away from the appliance so that they do not set the appliance on fire.
- **WARNING:** Keep ventilation openings, in the appliance enclosure or in the built-in structure, clear of obstruction.
- **WARNING:** Do not use mechanical devices or other means to accelerate the defrosting process, other than those recommended by the manufacturer.
- **WARNING:** Do not damage the refrigerant circuit.
- Please be sure to store alcoholic drinks or other packaging containing alcohol in tightly closed containers. Any alcohol that leaks out may be ignited by electrical components.

Danger of tipping and falling:

- Do not misuse the plinth, drawers, doors etc. as a step or for support. This applies particularly to children.

Danger of food poisoning:

- Do not consume food which has been stored too long.

Danger of frostbite, numbness and pain:

- Avoid prolonged skin contact with cold surfaces or refrigerated/frozen goods or take protective measures, e.g wear gloves.
- Do not consume ice cream, water ice or ice cubes immediately and do not consume them too cold.

Danger of injury and damage:

- Hot steam can lead to injury. Do not use electrical heating or steam cleaning equipment, open flames or defrosting sprays to defrost.
- Do not use sharp implements to remove the ice.

Risk of crushing:

- Do not hold the hinge when opening and closing the door. Fingers may get caught.

Symbols on the appliance:

This symbol may be located on the compressor. It relates to the oil in the compressor and makes reference to the risk that: Swallowing or inhaling can be fatal. This advice is only relevant to recycling. There is no danger in normal operation.

This symbol is located on the compressor and indicates the danger of flammable materials. Do not remove the sticker.

This or a similar sticker may be located on the rear of the appliance. This sticker indicates that there are vacuum insulation panels (VIP) or perlite panels in the door and/or housing. This advice is only relevant to recycling. Do not remove the sticker.

Please note the warning messages and other specific advice in the other chapters:

	DANGER	indicates an immediately hazardous situation which will lead to death or serious injuries if it is not avoided.
	WARNING	indicates a hazardous situation which may lead to death or serious injuries if it is not avoided.
	CAUTION	indicates a hazardous situation which may lead to minor or moderate injuries if it is not avoided.
	NOTICE	indicates a hazardous situation which may lead to damage to property if it is not avoided.
	Note	indicates useful instructions and tips.

3 Functionality of the Touch & Swipe display

You operate your appliance using the Touch & Swipe display. You select appliance functions in the Touch & Swipe display (hereafter referred to as display) by tapping them. If you do not perform any action on the display for 10 seconds, the display either jumps back to the higher-level menu or directly to the status display.

3.1 Navigation and symbol explanation

In the illustrations, different symbols are used to navigate the display. The following table describes these symbols.

Symbol	Description
	Briefly touch the display: Activates/deactivates function. Confirms selection. Opens submenu.
3s	**Touch the display for a specified time (e.g. 3 seconds):** Activates/deactivates function or value.
	Swipe left or right: Navigate in the menu.
Back	**Briefly touch the Back symbol:** Jumps back one menu level.
Back 3s	**Press and hold the Back symbol for 3 seconds:** Jumps back to the status display.
	Arrow with clock: It takes more than 10 seconds for the following message to appear in the display.
2s 5s 10s	**Arrow with a time indication:** It takes the specified amount of time until the following message appears in the display.
	“Open Settings menu” symbol: Navigates to the Settings menu and opens the settings menu. If necessary: Navigate to the desired function in the Settings menu. (see 3.2.1 Opening the Settings menu)
	“Open Advanced menu” symbol: Navigates to the Advanced menu and opens the advanced menu. If necessary: Navigate to the desired function in the Advanced menu. (see 3.2.2 Opening the expanded menu)
No action for 10 seconds	If you do not perform any action on the display for 10 seconds, the display either jumps back to the higher-level menu or directly to the status display.
Open door and close it again.	If you open the door and immediately close it again, the display jumps directly back to the status display.

Note: Illustrations of the display are shown in the English version.

3.2 Menus

The appliance functions are distributed over various menus:

Menu	Description
Main menu	When you switch the appliance on, you are automatically in the main menu. From here you can navigate to the most important appliance functions, to the Settings menu and to the Advanced menu.

Menu	Description
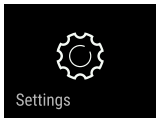 Settings menu	The Settings menu contains additional appliance functions for setting up your appliance.
Advanced menu	The advanced menu contains special appliance functions for setting up your appliance. Access to the Advanced menu is protected by the numerical code **1 5 1**.

3.2.1 Opening the Settings menu

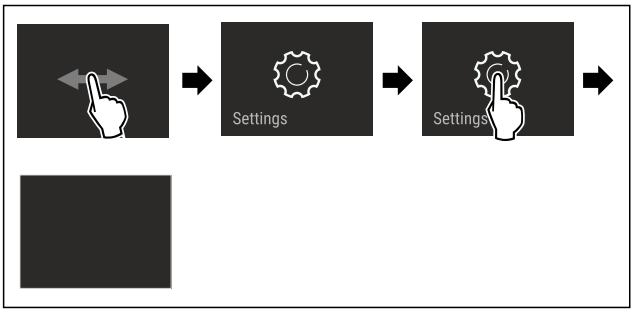

Fig. 2 Example illustration

▶ Carry out action steps according to the illustration.
▷ Settings menu is open.
▶ If necessary: Navigate to the desired function.

3.2.2 Opening the expanded menu

Fig. 3

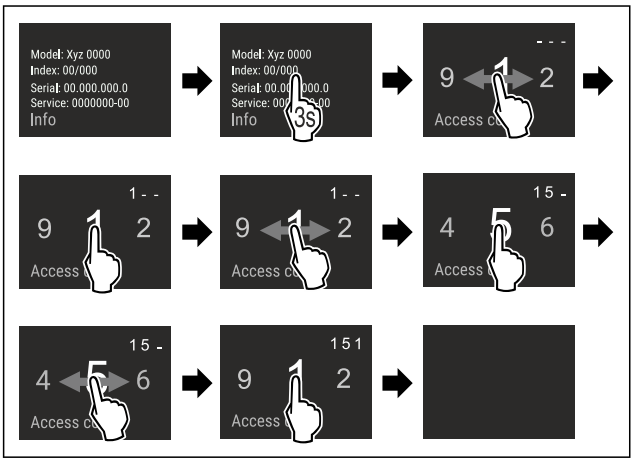

*Fig. 4 Example illustration, access with numerical code **151***

▶ Carry out action steps according to the illustration.
▷ The expanded menu is open.
▶ If necessary: Navigate to the desired function.

3.3 Sleep mode

If you do not touch the display for 1 minute, the display switches to sleep mode. In sleep mode, the display brightness is dimmed.

3.3.1 Ending sleep mode

▶ Touch the display briefly with your finger.
▷ Sleep mode is ended.

4 Putting into operation

4.1 Switching on appliance (first use)

Make sure that the following requirements are fulfilled:

❑ The appliance has been installed and connected in accordance with the installation instructions.
❑ All adhesive strips, adhesive and protective films and transport locks are removed from inside and on the appliance.
❑ All marketing leaflets are removed from the drawers.
❑ You are familiar with the functionality of the Touch & Swipe display. (see 3 Functionality of the Touch & Swipe display)

Switch on the appliance using the Touch & Swipe display:

▶ If the display is in sleep mode: Briefly touch the display.
▶ Carry out action steps according to the illustration.

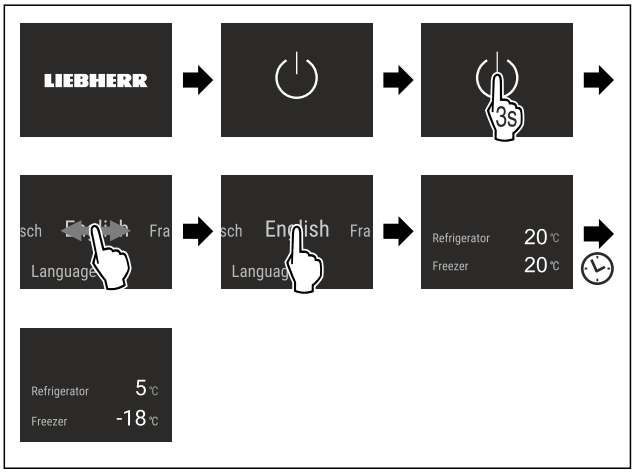

Fig. 5 Example illustration

▷ The status display appears.
▷ The appliance cools to the temperature set at the factory.
▷ The appliance starts in demo mode (status display with DEMO appears): If the appliance starts in demo mode, you can deactivate demo mode within the next 5 minutes. (see Demo mode)

More information:

- Start the IceMaker for the first time. (see 4.2 Starting the IceMaker for the first time*) *
- Start the EasyTwist-Ice for the first time. (see 4.3 Starting the EasyTwist-Ice for the first time*) *
- Start the SmartDevice for the first time. (see 1.3 SmartDevice) and (see WiFi)

Note

The manufacturer recommends:

▶ Stock with food: Wait for around 6 hours until the set temperature is reached.
▶ **Store frozen foods** at -18 °C or colder.
▶ Observe the notes on storing food. (see 5.1 Information regarding storage)

Note

Accessories can be purchased from the Liebherr-Hausgeräte store at home.liebherr.com/shop/de/deu/zubehor.html.

4.2 Starting the IceMaker for the first time*

If your appliance is equipped with IceMaker, you must clean the IceMaker **before using it for the first time**.

Make sure that the following requirements are fulfilled:

❑ The appliance is properly connected.

4.3 Starting the EasyTwist-Ice for the first time*

If your appliance is equipped with EasyTwist-Ice, you must clean the EasyTwist-Ice **before using it for the first time**.

Make sure that the following requirements are fulfilled:

❑ The appliance is properly connected.

▶ Clean the EasyTwist-Ice. (see 9.4.7 Cleaning the Easy-Twist-Ice*)
▶ Fill the water tank.

5 Storage

5.1 Information regarding storage

WARNING

Risk of fire

▶ Do not use any electrical appliances in the food area of the appliance unless recommended by the manufacturer.

Note

The energy consumption increases and the cooling power goes down if ventilation is not sufficient.

▶ Always keep air slots clear.

Observe the following specifications for storage:

- Keep the air vents on the inside of the rear wall free.
- Keep the air vents on the fan free.
- In the freezer compartment: Package food properly.
- Package or cover foods that readily take on or give off odours or taste in closed containers.
- Package raw meat or fish in clean, closed containers. This will prevent meat or fish from touching or dripping onto other food.
- Keep liquids in closed containers.
- Leave space between goods to ensure good air circulation.
- Store food according to the instructions on the packaging.
- Always observe the best-before date indicated on the packaging.

Note

Failure to follow these guidelines can lead to foodstuffs spoiling.

5.2 Fridge compartment

The air circulation in the appliance creates different temperature zones. You will find the different temperature zones in the appliance and equipment overview. (see 1.2 Overview of the appliance and equipment)

5.2.1 Arranging your food properly

▶ Upper area and door: Store butter, cheese, tinned food and tubes.
▶ Coldest temperature zone: Store perishable foods such as pre-cooked meals, meat and lunch meats.
▶ Bottom shelf: Store raw meat or fish.

5.3 EasyFresh

EasyFresh is great for non-packaged foods, such as fruit and vegetables.

The humidity in the compartment depends on the moisture content of the chilled goods placed in it, and also depends on how often the compartment is opened. You can regulate the humidity level. (see 8.7 Adjusting the moisture levels)

5.3.1 Arranging your food properly

▶ Store unpackaged fruit and vegetables.
If the humidity is too high:
▶ Regulate the humidity. (see 8.7 Adjusting the moisture levels)

5.4 Freezer compartment

Here, a dry, frosty storage climate is created at -18 °C. The frosty storage climate is suitable for storing frozen food for several months, for making ice cubes or freezing fresh food.

5.4.1 Freezing food

Freezing quantity

The maximum amount of fresh food that you can freeze within 24 hours is specified on the type plate (see 10.5 Model plate) under “Freezing capacity ... kg/24h”.

To ensure that food quickly freezes through, adhere to the following quantities per package:

- Fruit and vegetables up to 1 kg
- Meat up to 2.5 kg

Freezing food using SuperFrost

Depending on the quantity to be frozen, you can activate SuperFrost before freezing in order to achieve lower freezing temperatures. (see SuperFrost)

▶ Activate SuperFrost if the amount of food you have to freeze is more than approx. 2 kg.

The time at which you activate SuperFrost depends on the amount of food you have to freeze:

Freezing quantity	Time at which you should activate SuperFrost
Small amount of food to freeze	Activate SuperFrost about 6 hours before freezing. You can place the food in the freezer as soon as the appliance automatically deactivates SuperFrost.
Maximum amount of food to freeze	Activate SuperFrost about 24 hours before freezing. You can place the food in the freezer as soon as the appliance automatically deactivates SuperFrost.

Arranging your food properly

CAUTION

Risk of injury from broken glass!

Bottles and cans with beverages can burst during freezing. This applies in particular to carbonated beverages.

▶ Only freeze bottles and cans with beverages if you have activated the BottleTimer function in the SmartDevice app.

* Depending on model and options

Freezing quantity	Arranging your food properly
Small amount of food to freeze	Place packaged food in the top drawer. If possible, place groceries at the back of the drawer near the rear wall.
Maximum amount of food to freeze	Distribute packaged groceries throughout all drawers, but do not place any groceries in the bottom drawer. If possible, place groceries at the back of the drawer near the rear wall.

5.4.2 Defrosting food

WARNING
Risk of food poisoning!
▶ Do not re-freeze thawed food.
▶ Use defrosted foodstuff as soon as possible.

You can defrost food in several ways:
- In the fridge compartment
- In the microwave
- In the oven/fan-assisted oven
- At room temperature

▶ Take out only as much food as necessary.

5.5 Storage times

Refer to the specified storage times as a guide.

In the case of foods with a minimum shelf life, the date indicated on the packaging still applies.

5.5.1 Fridge section

Always follow the best-before date stated on the packaging.

5.5.2 Freezer compartment

Recommended storage period for various types of food		
Ice cream	at -18 °C	2 to 6 months
Sausages, ham	at -18 °C	2 to 3 months
Bread, baked goods	at -18 °C	2 to 6 months
Game, pork	at -18 °C	6 to 9 months
Fatty fish	at -18 °C	2 to 6 months
Lean fish	at -18 °C	6 to 8 months
Cheese	at -18 °C	2 to 6 months
Poultry, beef	at -18 °C	6 to 12 months
Vegetables, fruit	at -18 °C	6 to 12 months

6 Saving energy

- Pay attention to good ventilation. Do not cover ventilation holes or grids.
- Always keep the fan air slits clear.
- Do not install the appliance in direct sunlight, next to an oven, radiator or similar.
- Energy consumption depends on the installation conditions, e.g. the ambient temperature (see 1.4 Appliance range of use) . A warmer ambient temperature can increase the energy consumption.
- Open the appliance for as short a time as possible.
- The lower the temperature is set the higher the energy consumption.
- Sort your food: home.liebherr.com/food.
- Keep all food properly packed and covered. This prevents frost from forming.
- Only take food out for as long as necessary so that it doesn't warm up too much.
- Inserting warm food: allow to cool down to room temperature first.
- Thaw frozen food in the refrigerator.
- For longer periods of absence, use HolidayMode (see HolidayMode) .

Dust deposits increase energy consumption:

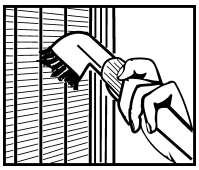

- For refrigerators with heat exchangers dust the metal grid on the back of the appliance once a year.

7 Controls

7.1 Controls and displays

7.1.1 Status display

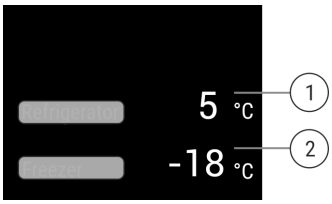

Fig. 6
(1) Temperature display of the fridge section
(2) Freezer compartment temperature display

The Status display shows the set temperatures and is the home display. From there, you can navigate to the options and settings.

7.1.2 Display symbols

Display symbols provide information on the current appliance status:

Symbol	Appliance status
	Standby The appliance or temperature zone is switched off.
	Flashing number Appliance is working. Temperature flashes until the set temperature is reached.
	Flashing symbol Appliance is working. Setting is made.

7.2 Appliance functions

7.2.1 Notes on the appliance functions

The appliance functions are set at the factory so that your appliance is fully functional.

Before you alter, activate or deactivate the device functions, make sure that the following requirements are met:

- ❑ You have read and understood the descriptions of how the display works.
- ❑ You have familiarised yourself with the operating and display elements of your appliance.

Turn off appliance

This setting turns off the whole appliance.

Switching off the entire appliance

Fig. 7

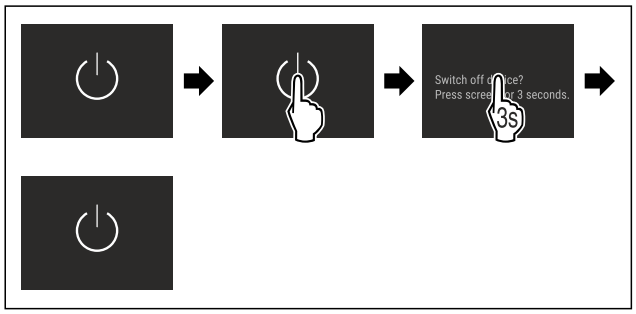

Fig. 8

▶ Turning off the IceMaker .*
▷ Off: Display goes black.

7.2.3 Switching temperature zones off and on

You can switch temperature zones of the appliance off independently.

Application:

- Cleaning
- Defrosting

Switching the fridge compartment off

Make sure that the following requirements are fulfilled:

❑ Refrigerator compartment has been emptied.

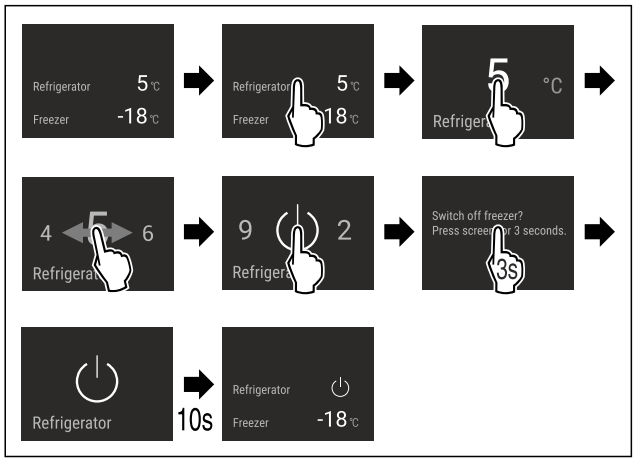

Fig. 9 Example illustration

▶ Carry out action steps according to the illustration.
▷ Refrigerator compartment is switched off.

Switching the freezer compartment off

Make sure that the following requirements are fulfilled:

❑ Freezer compartment has been emptied.
❑ IceMaker is deactivated.*
❑ EasyTwist-Ice water tank is empty.*

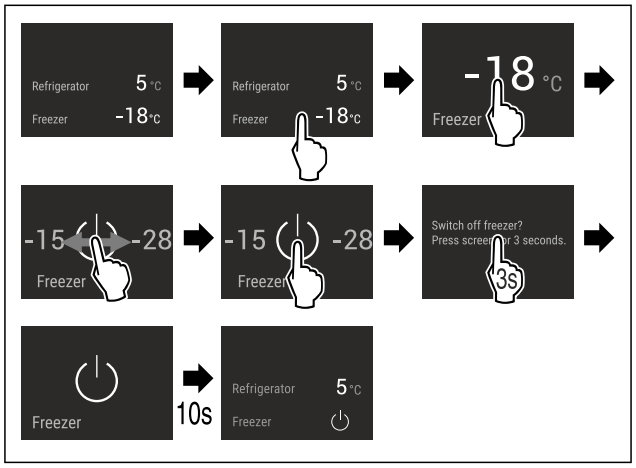

Fig. 10 Example illustration

▶ Carry out action steps according to the illustration.
▷ Freezer compartment is switched off.

Switching the fridge compartment on

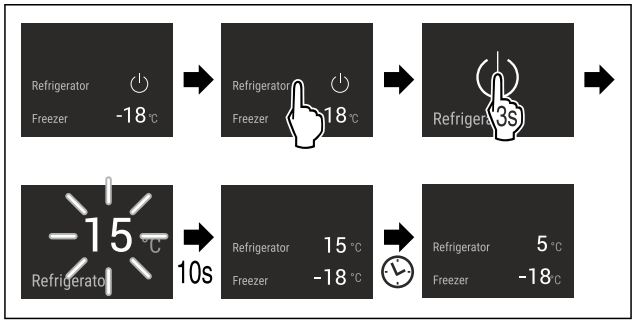

Fig. 11 Example illustration

▶ Carry out action steps according to the illustration.
▷ Refrigerator compartment is switched on.
▷ The appliance cools to the last set temperature.

Switching the freezer compartment on

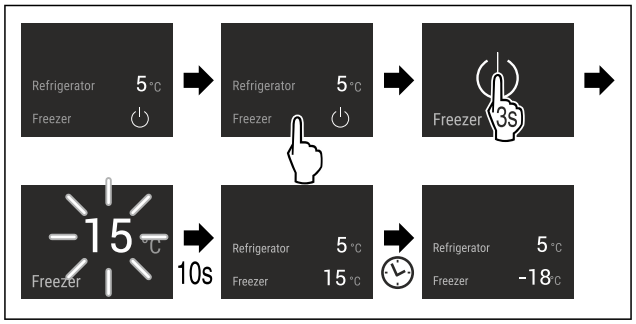

Fig. 12 Example illustration

▶ Carry out action steps according to the illustration.
▷ Freezer compartment is switched on.
▷ The appliance cools to the last set temperature.

WiFi

Use this function to connect your appliance to WiFi. You can then operate it via the SmartDevice app on a mobile device. You can also use this function to disconnect or reset the WiFi connection.

* Depending on model and options

To connect your device to WiFi, you need the SmartDeviceBox.

More information on the SmartDevice: (see 1.3 SmartDevice)

Note
The SmartDevice function is not available in the following countries: Russia, Belarus, Kazakhstan.

You cannot use the SmartDeviceBox.

Establishing the WiFi connection for the first time

Make sure that the following requirements are fulfilled:

- ❑ You have purchased and inserted a SmartDeviceBox. (see 1.3 SmartDevice)
- ❑ You have installed the SmartDevice app (see apps.home.liebherr.com).
- ❑ Registration in the SmartDevice app is completed.

Fig. 13

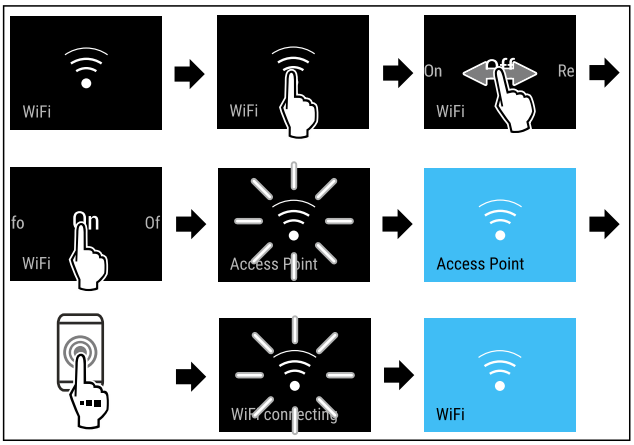

Fig. 14

▶ Carry out action steps according to the illustration.
▷ Connection is established.

Disconnecting from the WiFi

Fig. 15

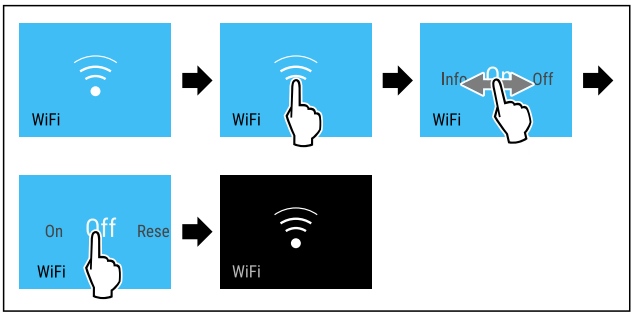

Fig. 16

▶ Carry out action steps according to the illustration.
▷ There is no connection.

Resetting the WiFi connection

Fig. 17

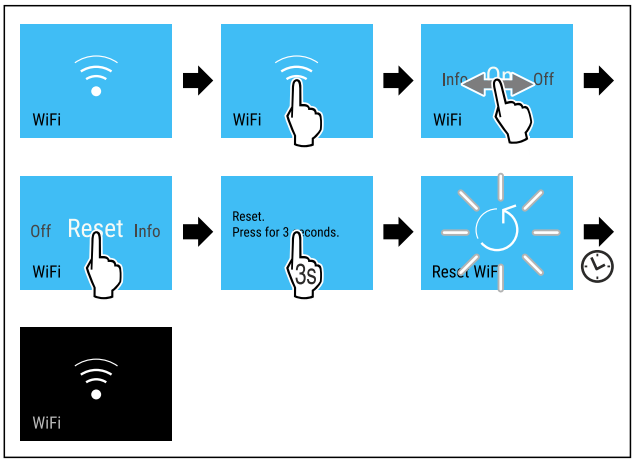

Fig. 18

▶ Carry out action steps according to the illustration.
▷ WiFi connection and other WiFi settings are reset to factory settings.

Showing information about the WiFi connection

Fig. 19

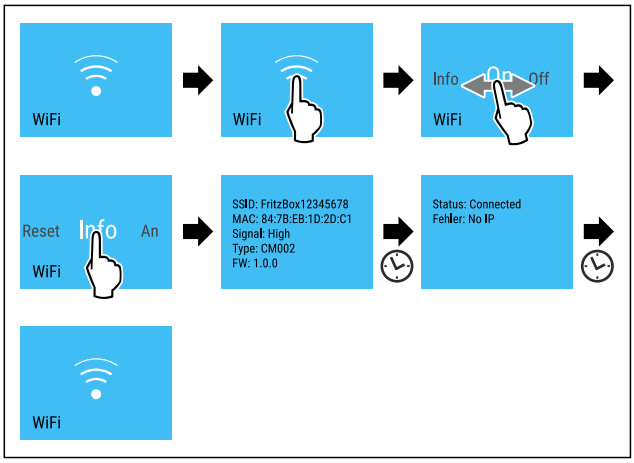

Fig. 20

▶ Carry out action steps according to the illustration.

5 °C Temperature

Use this function to set the temperature.

The temperature depends on the following factors:

- How often the door is opened
- How long the door is open for
- The room temperature of the installation site
- The type, temperature and amount of food

Temperature zone	Recommended setting
5 °C Fridge compartment	5 °C
-18 °C Freezer compartment	-18 °C

Setting the temperature in the fridge compartment

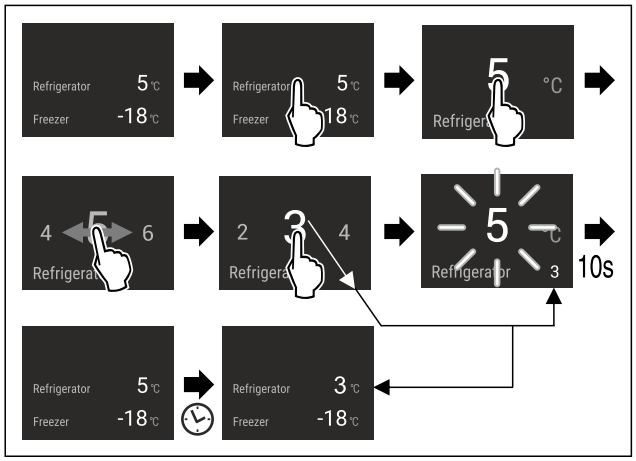

Fig. 21

▶ Carry out action steps according to the illustration.
▷ Temperature is set.

Setting the temperature in the freezer compartment

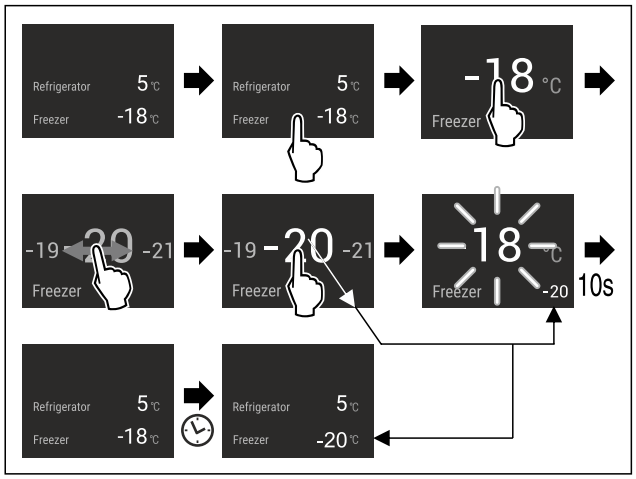

Fig. 22

▶ Carry out action steps according to the illustration.
▷ Temperature is set.

Temperature unit

Use this function to set the temperature unit. You can set degrees Celsius or degrees Fahrenheit as the temperature unit.

Setting the temperature unit

Fig. 23

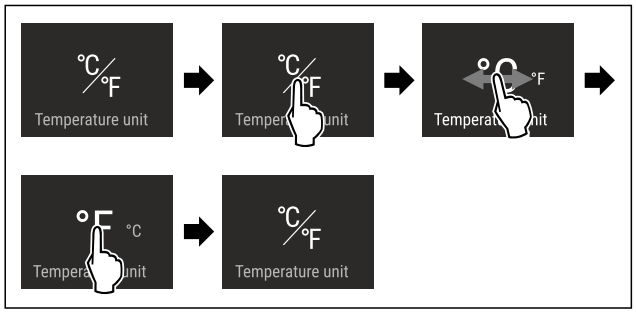

Fig. 24 Example illustration: Switch from degrees Celsius to degrees Fahrenheit.

▶ Carry out action steps according to the illustration.
▷ The temperature unit is set.

D-Value

Use this function to set the D-Value.

The D-Value specifies whether you are operating your fridge section with a dry rear wall or without a dry rear wall. The rear wall is installed in the appliance as delivered. The D-Value is pre-set to D1.

You can remove the rear wall for cleaning. (see 9.4.5 Cleaning the dry rear panel) In order to operate the appliance without a rear wall, you must set the D-Value to D2.

Note
The declared energy consumption was determined without a dry rear wall. The appliance is fully functional with a dry rear wall but its energy consumption will be slightly higher. Liebherr recommends:

▶ Operate the appliance with a dry rear wall in order to prevent visible condensate and the food freezing.

Setting the D-Value

Fig. 25

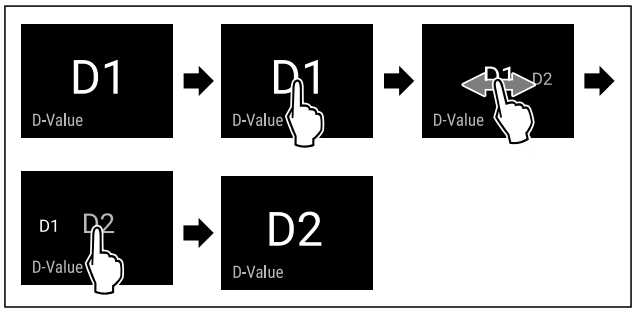

Fig. 26 Example illustration: Switch from D1 to D2.

▶ Carry out action steps according to the illustration.
▷ The D-Value is set.

SuperCool

This function selects the lowest cooling temperature. This gives you colder storage temperatures.

This function is relevant to the fridge section *Fig. 1 (A)*

Use:

- Cool large amounts of food quickly.

Activating/deactivating the function

▶ Using the fridge section: activate the function when you add the goods.
▶ Activating/deactivating.

The function automatically turns off. The appliance goes back to normal mode. The temperature adjusts itself to the set level.

PowerCool

You can use this function to activate or deactivate PowerCool. PowerCool ensures optimised temperature layers for cooling your food.

The function applies to the fridge section.

Application:

- At higher room temperatures (as of approx. 35 °C)
- At high humidity, e.g. on summer days
- When storing moist food, in order to prevent condensate forming in the interior

Note
The fan may also run even if the function is deactivated. It therefore ensures even temperature distribution in the appliance.

If the function is active, the device operates at higher power. As a result, the device's operating noise may be temporarily louder and energy consumption will increase.

Activating PowerCool

Fig. 27

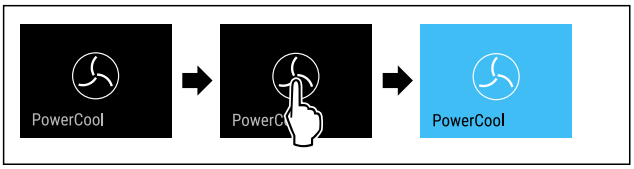

Fig. 28

▶ Carry out action steps according to the illustration.
▷ PowerCool is activated.
▷ The appliance's energy consumption increases slightly.

Deactivating PowerCool

Fig. 29

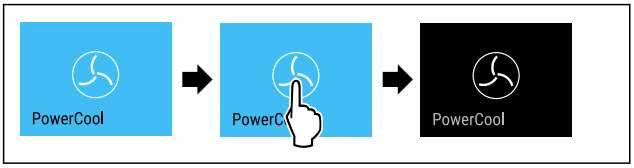

Fig. 30

▶ Carry out action steps according to the illustration.
▷ PowerCool is deactivated.

VarioTemp

This function allows you to use the freezer compartment as an additional cooling zone. You can set the temperature from -2 °C to 14 °C. If you activate this function, it may cause more noise. However, the appliance is still fully functional.

For storage of foodstuff in the freezer compartment with the VarioTemp function activated, Liebherr recommends:

Temperature range	Foodstuff
4 °C to 9 °C	Cooked foods, cheese, preserves
0 °C	Packaged fruit and vegetables
-2 °C	Fresh fish and seafood
10 °C to 14 °C	Cold-sensitive foodstuffs such as sweet potatoes, pumpkin or exotic fruits, food or drinks that should not be eaten too cold

Activating VarioTemp

Make sure that the following requirements are fulfilled:*

❑ The IceMaker has been cleaned. (see 9.4.7 Cleaning the EasyTwist-Ice*) *
❑ The EasyTwist-Ice has been cleaned. (see 9.4.7 Cleaning the EasyTwist-Ice*) *

WARNING
Risk of food poisoning!
▶ Do not re-freeze thawed food.
▶ Use defrosted foodstuff as soon as possible.

Fig. 31

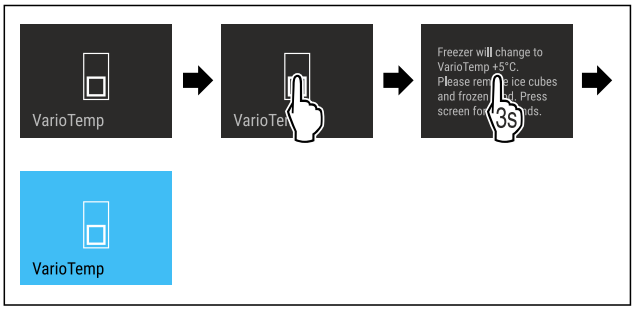

Fig. 32

▶ Carry out steps according to the illustration.
▷ VarioTemp is activated.
▷ VarioTemp is set to the preselected value.
▷ The status display does not show the preset temperature until it is reached.

Adjusting VarioTemp

Make sure that the following requirements are fulfilled:

❑ The VarioTemp is activated. (see Activating VarioTemp)

WARNING
Risk of food poisoning!
▶ Do not re-freeze thawed food.
▶ Use defrosted foodstuff as soon as possible.

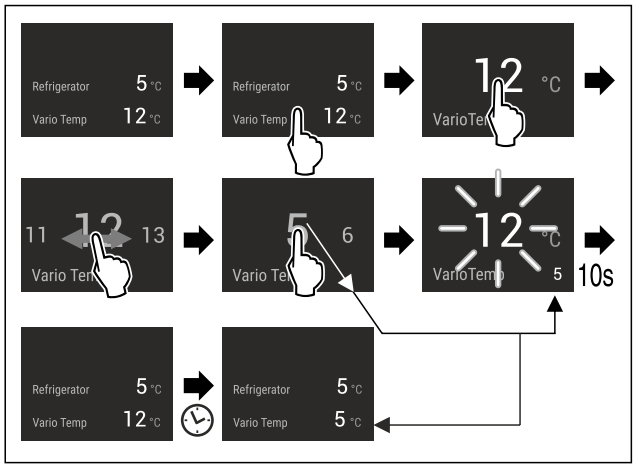

Fig. 33 Example illustration: Change VarioTemp from 12 °C to 5 °C for a fridge-freezer combination with EasyFresh.

▶ Carry out steps according to the illustration.
▷ VarioTemp is adjusted.
▷ The status display does not show the new set temperature until it is reached.

Deactivating VarioTemp

Fig. 34

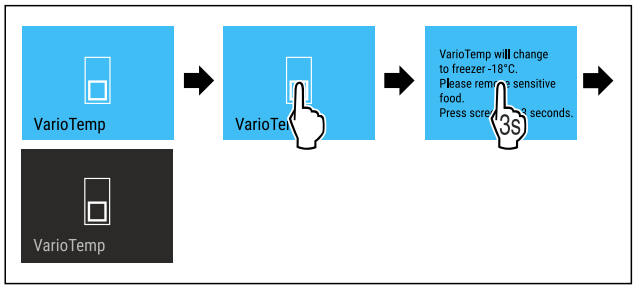

Fig. 35

▶ Carry out steps according to the illustration.
▷ VarioTemp is deactivated.
▷ The freezer compartment is cooled to the preset temperature.

SuperFrost

This function selects the lowest freezing temperature. This gives you colder storage temperatures.

This function refers to the freezer section *Fig. 1 (C)*.

Use:

- For storing more than 2 kg fresh food every day.
- Freezing fresh food quickly to the core.
- Increasing the cold reserves in the stored goods before defrosting the appliance.

Activating/deactivating the function

With a small amount to freeze:
▶ Activate 6 hours before use.
With a maximum amount to freeze:
▶ Activate 24 hours before use.
▶ Activating/deactivating.

The function automatically turns off. The appliance goes back to normal mode. The temperature adjusts itself to the set level.

Start defrosting cycle

Use this function to start the automatic defrosting cycle manually if it does not start automatically in the event of a fault.

Starting defrosting cycle

Fig. 36

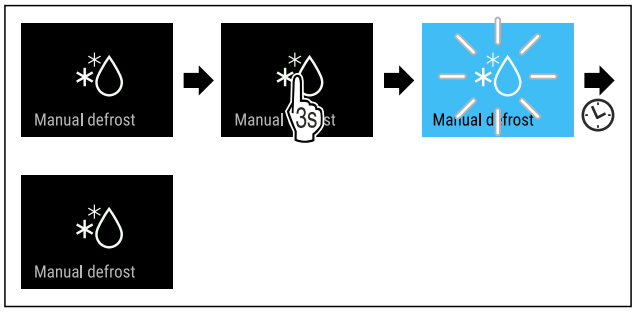

Fig. 37

▶ Carry out action steps according to the illustration.
▷ Defrosting cycle has started: Icon flashes until defrosting cycle is automatically completed.
▷ When defrosting cycle is finished: The device continues to run in normal mode.

Cancelling defrosting cycle

The defrosting cycle will be stopped automatically. However, you can also cancel the defrosting cycle at any time during the defrosting process:

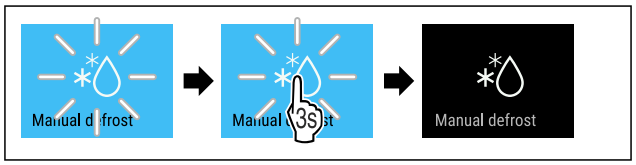

Fig. 38

▶ Carry out action steps according to the illustration.
▷ Defrosting cycle is cancelled.
▷ The device continues to run in normal mode.

PartyMode

You can use this function to activate or deactivate PartyMode. PartyMode activates various functions that are useful for a party.

PartyMode activates the following functions:

- SuperCool (see SuperCool)
- SuperFrost (see SuperFrost)
- IceMaker with MaxIce (see IceMaker / MaxIce *) *

You can adjust all listed functions individually and flexibly. When you deactivate PartyMode, all changes are discarded.

If the function is active, the device operates at higher power. As a result, the device's operating noise may be temporarily louder and energy consumption will increase.

Activating PartyMode

Make sure that the following requirements are fulfilled:*

❑ The IceMaker has been started. (see 4.2 Starting the IceMaker for the first time*)

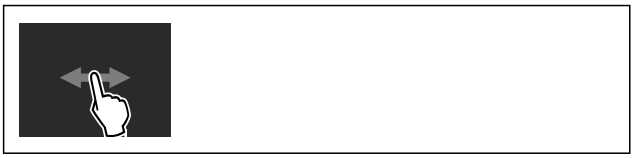

Fig. 39

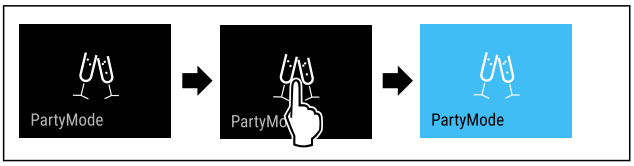

Fig. 40

▶ Carry out action steps according to the illustration.
▷ PartyMode and the associated functions are activated.
▷ The temperature display turns blue.
▷ The current temperature flashes until the target temperature is reached.

Deactivating PartyMode

The PartyMode is automatically deactivated after 24 seconds. However, you can also deactivate PartyMode manually at any time:

Fig. 41

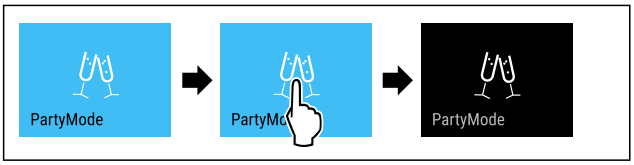

Fig. 42

▶ Carry out action steps according to the illustration.
▷ PartyMode is deactivated.
▷ The appliance cools to the temperature set previously: The current temperature flashes until the target temperature is reached.

HolidayMode

This function minimises the energy consumption during an extended absence. The temperature of the refrigerator compartment is set to 15 °C and this is displayed on the status screen when the temperature has been reached.

The set freezer temperature remains unchanged.

This function refers to the fridge section *Fig. 1 (A)*.

Use:

- Save energy if you plan to be away for a while.
- Avoid coming home to bad smells and mould.

Activating/deactivating the function

▶ Empty everything from the fridge section.
▶ Activating/deactivating .
▷ On: Fridge temperature is raised.
▷ Off: the previously set temperature is restored.

SabbathMode

You can use this function to activate or deactivate SabbathMode. If you activate this function, some electronic functions are switched off. As a result, your device meets the religious requirements for Jewish holidays such as Sabbath and complies with STAR-K Kosher certification.

Device status when SabbathMode is active
The status display shows SabbathMode permanently.
All functions on the display are locked except for the **Deactivate SabbathMode function**.
Active functions remain active.
The display remains bright when you close the door.
The interior lighting is deactivated.
Reminders are not implemented. The set time interval stops.
Reminders and warnings are not displayed.
There is no door alarm.
There is no temperature alarm.
The IceMaker is switched off.*
The defrosting cycle operates only for the specified time, without considering the device consumption.
After a power failure, the device returns to SabbathMode.

Device status

Note

This appliance has certification from the “Institute for Science and Halacha”. (www.machonhalacha.co.il)

You can find a list of STAR-K-certified appliances at www.star-k.org/appliances.

Activating SabbathMode

WARNING

Danger of food poisoning from spoiled food!
If you have SabbathMode activated and a power failure occurs, no message appears in the status display about the power failure. Once the power is restored, the appliance continues to operate in SabbathMode. The power failure may mean that food spoils and the consumption of this food could lead to food poisoning.
After a power failure:

▶ Do not consume food that was frozen and has thawed out.

Fig. 43

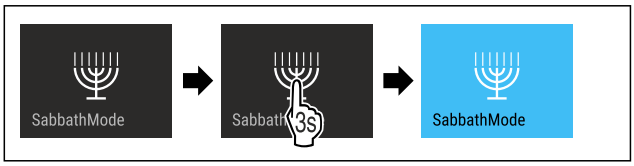

Fig. 44

▶ Carry out action steps according to the illustration.
▷ SabbathMode is activated.
▷ The status display shows SabbathMode permanently.

Deactivating SabbathMode

The SabbathMode is automatically deactivated after 80 hours. However, you can also deactivate SabbathMode manually at any time:

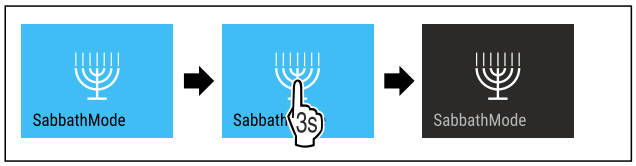

Fig. 45

▶ Carry out action steps according to the illustration.
▷ SabbathMode is deactivated.

EnergySaver

You can use this function to activate or deactivate Energy saving mode. If energy saving mode is activated, the energy consumption decreases and the temperature in the device increases. The food remains fresh, but the shelf life is shortened.

Temperature zone	Recommended setting (see Temperature)	Temperature with active EnergySaver
5 °C Fridge section	5 °C	7 °C
-18 °C Freezer section	-18 °C	-16 °C

Temperatures

Activating EnergySaver

Fig. 46

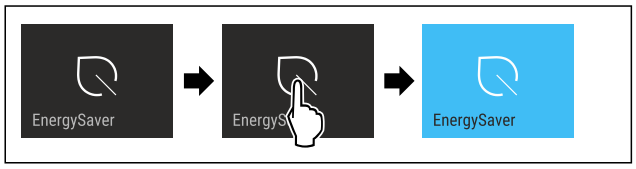

Fig. 47

▶ Carry out action steps according to the illustration.
▷ Energy saving mode is activated.

Deactivating EnergySaver

Fig. 48

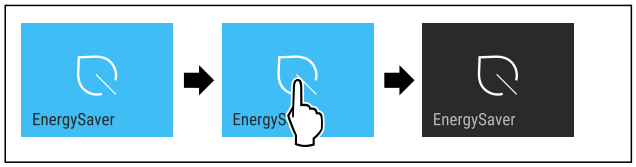

Fig. 49

▶ Carry out action steps according to the illustration.
▷ Energy saving mode is deactivated.

IceMaker / MaxIce *

You can activate or deactivate ice cube production with the IceMaker function. Use the MaxIce function to increase the number of ice cubes in the IceMaker.

More information on the number of ice cubes:	(see 10.1 Technical specifications)
Further information on the IceMaker water supply:	(see IceMaker water supply*)
More information on cleaning the lines of the IceMaker:	(see TubeClean *)

If the function is active, the device operates at higher power. As a result, the device's operating noise may be temporarily louder and energy consumption will increase.

Activating IceMaker

Make sure that the following requirements are fulfilled:

❑ IceMaker is put into operation. (see 8.10 IceMaker*)

Fig. 50

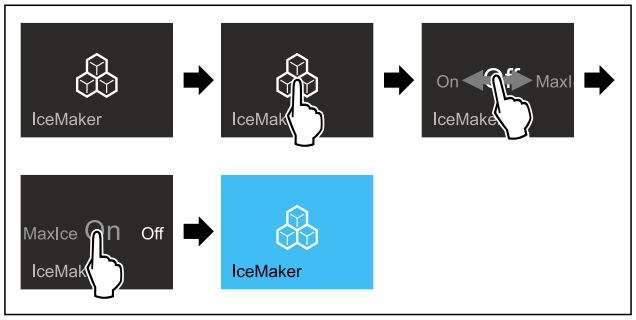

Fig. 51

▶ Carry out action steps according to the illustration.

-or-

▶ Activate with the SmartDevice app.

▷ IceMaker is activated. It can take up to 24 hours for the IceMaker to produce the first ice cubes.

Activating the IceMaker with MaxIce

If you have not activated the IceMaker function before, make sure that the following requirements are met:

❑ IceMaker is put into operation. (see 8.10 IceMaker*)

Fig. 52

*** Depending on model and options**

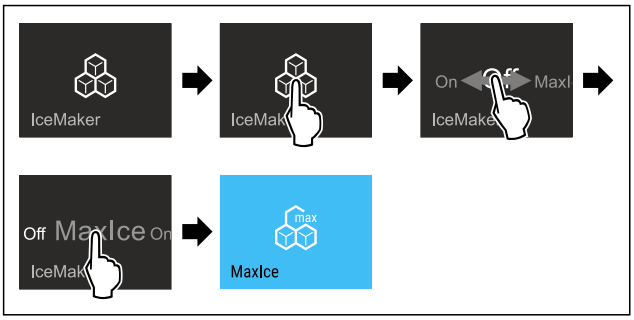

Fig. 53

▶ Carry out action steps according to the illustration.

-or-

▶ Activate with the SmartDevice app.

▷ The IceMaker is activated with MaxIce.

Changing between the IceMaker and MaxIce

If you have activated the IceMaker and would like to change to MaxIce:

Fig. 54

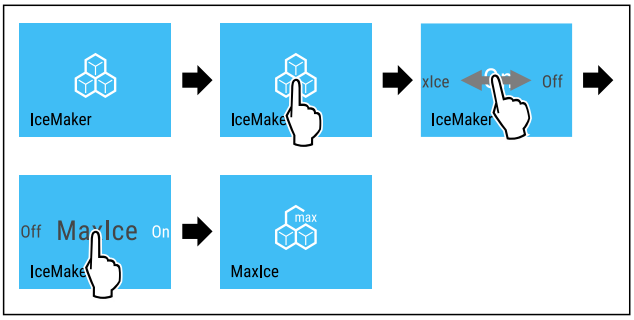

Fig. 55

▶ Carry out action steps according to the illustration.

▷ The IceMaker is activated with MaxIce.

If you have activated MaxIce and would like to change to the IceMaker:

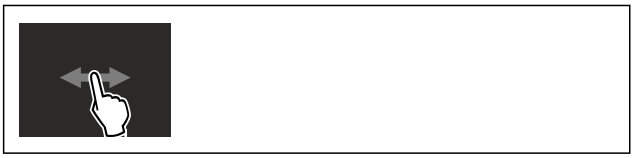

Fig. 56

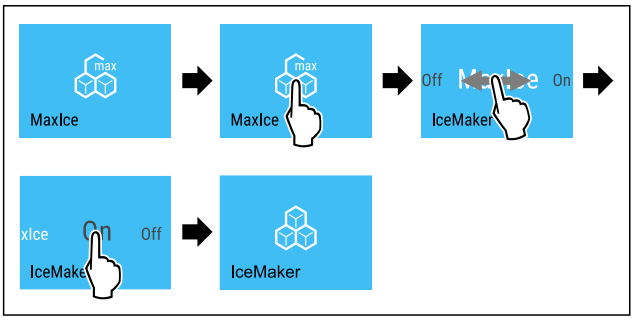

Fig. 57

▶ Carry out action steps according to the illustration.

▷ IceMaker is activated.

▷ MaxIce is deactivated.

Deactivating the IceMaker / MaxIce

Fig. 58

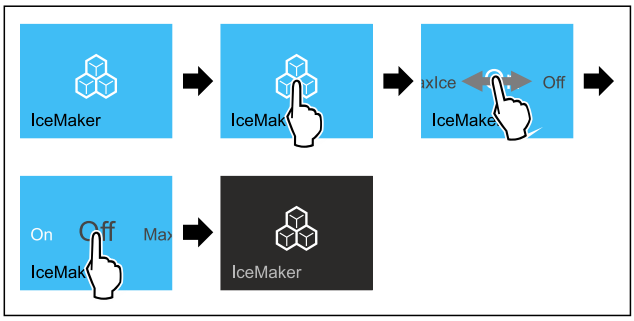

Fig. 59 Example illustration of the active IceMaker function

▶ Carry out action steps according to the illustration.

-or-

▶ Deactivate with the SmartDevice app.

▷ IceMaker and MaxIce are deactivated.

▷ If ice cubes are currently being made, the system completes the process.

▷ The IceMaker goes off automatically.

5 IceMaker water supply*

Use this function to set the IceMaker water supply. The IceMaker water supply regulates the amount of water supplied. The IceMaker water supply can be changed if the water supply does not match the water pressure and the ice cube size dispensed.

The IceMaker water supply is pre-set to value 5 as delivered. A value from 1 (smallest inflow volume) to 8 (largest inflow volume) can be selected.

Setting the IceMaker water supply

Make sure that the following requirements are fulfilled:

❑ The IceMaker has been started. (see 4.2 Starting the IceMaker for the first time*)

❑ IceMaker is activated. (see IceMaker / MaxIce *)

Fig. 60

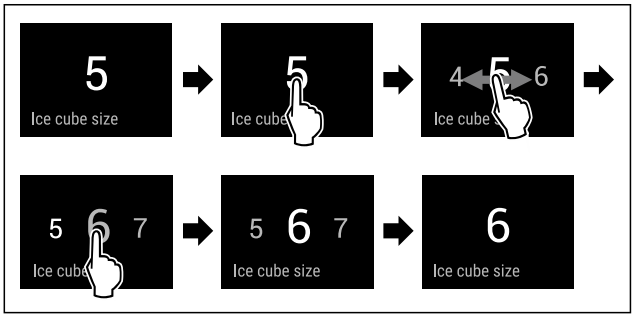

Fig. 61 Example illustration: Switch from value 5 to value 6.

▶ Carry out action steps according to the illustration.

▷ IceMaker water supply is set.

TubeClean *

You can use this function to activate or deactivate TubeClean. If TubeClean is activated, it cleans the IceMaker lines.

Activating TubeClean

Make sure that the following requirements are fulfilled:

- ❑ IceMaker cleaning is prepared. (see 9.4.8 Cleaning the IceMaker*)
- ❑ Empty container with a capacity of 1.5 l and with a maximum height of 10 cm is ready.

▶ Place the container in the drawer under the IceMaker.

Fig. 62

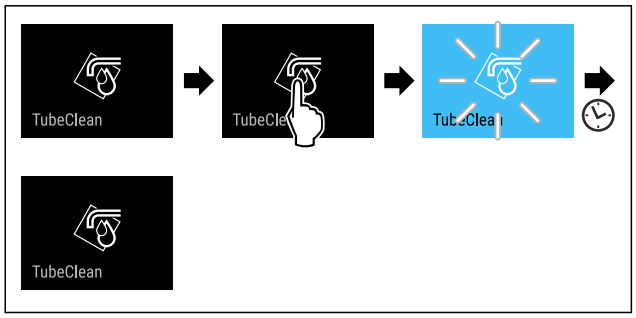

Fig. 63

▶ Carry out action steps according to the illustration.
▷ TubeClean is activated.
▷ The cleaning process has started: Icon flashes until the cleaning process is automatically completed after 60 minutes.
▷ When the cleaning process is complete: The device continues to run in normal mode.

Deactivating TubeClean

TubeClean is automatically ended after 60 minutes. However, TubeClean can also be deactivated at any time during the cleaning process:

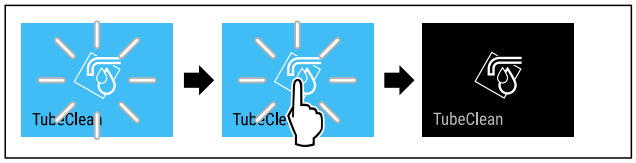

Fig. 64

▶ Carry out action steps according to the illustration.
▷ TubeClean is deactivated: Cleaning process is aborted.
▷ The device continues to run in normal mode.

CleaningMode

You can use this function to activate or deactivate CleaningMode. CleaningMode enables the appliance to be cleaned conveniently.

This setting applies to the fridge section.

Application:

- Clean the fridge section. (see 9.4 Cleaning the appliance)

Device status when CleaningMode is active
The status display shows CleaningMode permanently.
The fridge section is switched off.

Device status when CleaningMode is active
Interior lighting is activated.
The reminders and warnings are not displayed. No signal tone sounds.

Device status

Activating CleaningMode

Fig. 65

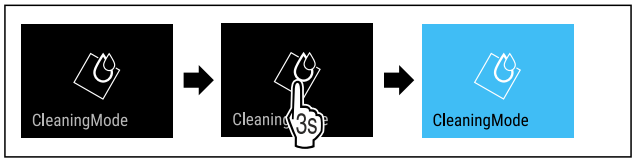

Fig. 66

▶ Carry out action steps according to the illustration.
▷ CleaningMode is activated.
▷ The status display shows CleaningMode permanently.

Deactivating CleaningMode

CleaningMode is deactivated automatically after 60 minutes. However, you can also deactivate CleaningMode manually at any time:

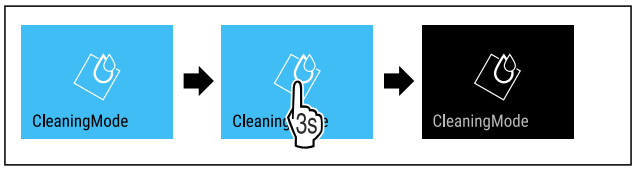

Fig. 67

▶ Carry out action steps according to the illustration.
▷ CleaningMode is deactivated.
▷ The appliance cools to the temperature set previously.

Display brightness

Use this function to set the display brightness in stages.

You can select the following brightness levels:

- 40 %
- 60 %
- 80 %
- 100 % (pre-setting)

Setting the display brightness

Fig. 68

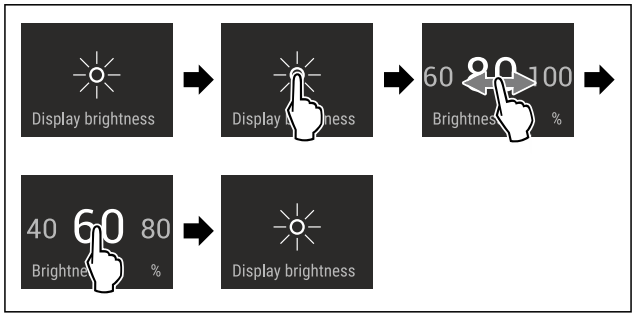

* Depending on model and options

Fig. 69 Example illustration: Switch from 80 % to 60 %.

▶ Carry out action steps according to the illustration.
▷ The display brightness is set.

Door alarm

Use this function to activate or deactivate the door alarm. The door alarm sounds if the door is open for too long. The door alarm is activated on delivery. You can set how long the door may be open before the door alarm sounds.

The following values can be set:

- 1 minute
- 2 minutes
- 3 minutes
- Off

Setting the door alarm

Fig. 70

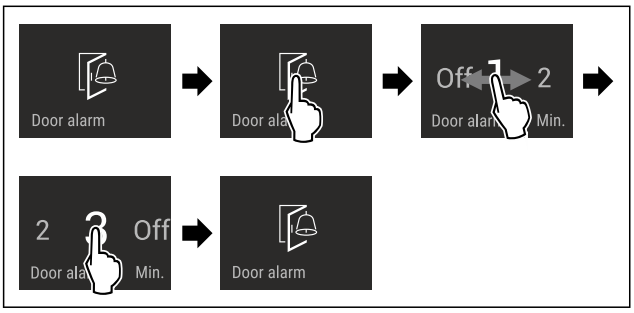

Fig. 71 Example illustration: Change door alarm from 1 minute to 3 minutes.

▶ Carry out action steps according to the illustration.
▷ The door alarm is set.

Deactivating the door alarm

Fig. 73

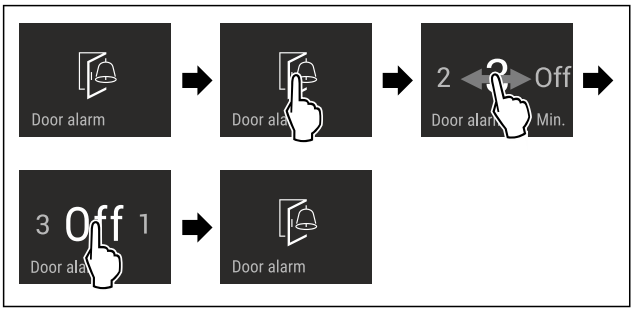

Fig. 74

▶ Carry out action steps according to the illustration.
▷ The door alarm is deactivated.

Input lock

You can use this function to activate or deactivate the input lock. The input lock prevents the appliance being operated accidentally, e.g. by children.

Application:

- Avoid unintentional modification of functions.
- Avoid unintentional switching off of the device.
- Avoid unintentional temperature setting.

Activating the input lock

If you activate the input lock, you can continue to navigate in the menus but you cannot select or change other functions.

Fig. 75

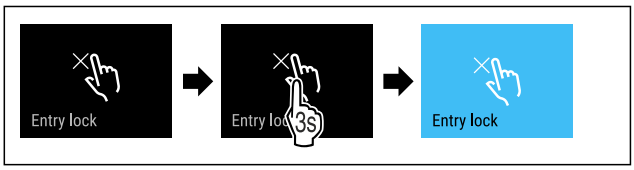

Fig. 76

▶ Carry out action steps according to the illustration.
▷ Input lock is activated.

Deactivating the input lock

Fig. 77

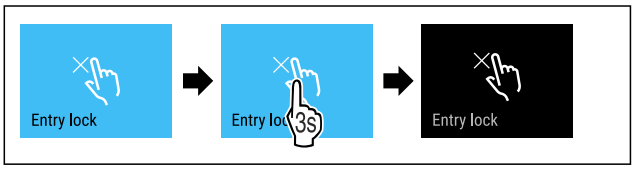

Fig. 78

▶ Carry out action steps according to the illustration.
▷ Input lock is deactivated.

Language

Use this function to set the display language.

You can select the following languages:

- Deutsch
- English
- Français
- Español
- Italiano
- Nederlands
- Čeština
- Polski
- Português
- Русский
- 温度单位

Setting the language

Fig. 79

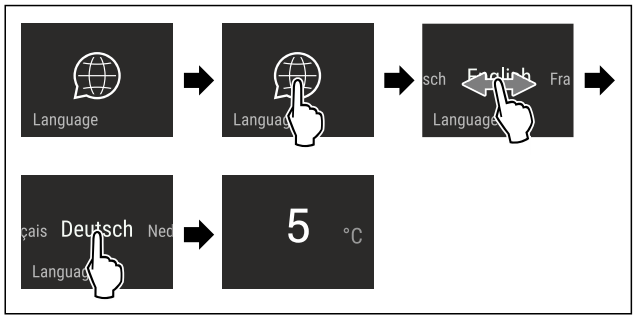

Fig. 80 Example illustration depending on the language and temperature

▶ Carry out action steps according to the illustration.
▷ The language is set.
▷ The display returns to the status display.

Device information

Use this function to indicate the model name, index, serial number and service number of your device. You will need the device information when you contact customer service. (see 10.4 Customer Service)

This function also opens the Advanced menu. (see 3 Functionality of the Touch & Swipe display)

Indicating the device information

Fig. 81

Fig. 82

▶ Carry out action steps according to the illustration.
▷ Display indicates device information.

Software

Use this function to indicate the software version of your device.

Indicating the software version

Fig. 83

Fig. 84

▶ Carry out action steps according to the illustration.
▷ Display indicates software version.

Reminder

Reminders are given out acoustically by a beep and visually by a symbol in the display. The signal gets louder until the alert stops.

Replace FreshAir active carbon filter

This message appears when the air filter needs replacing.

▶ Change the air filter every six months.
▶ Confirm the message with OK.
▷ The service interval resets.
▷ The air filter guarantees the air quality in the fridge.

Activating the setting

▶ Activating/deactivating .

Demo mode

Demo mode is a special feature for dealers who want to demonstrate appliance features. If you activate demo mode, all refrigeration functions are deactivated.

If you switch on your appliance and “Demo” appears in the status display, then demo mode is already activated.

If you activate and then deactivate demo mode, the appliance will be reset to factory defaults. (see Resetting to factory settings)

Activating demo mode

Fig. 85

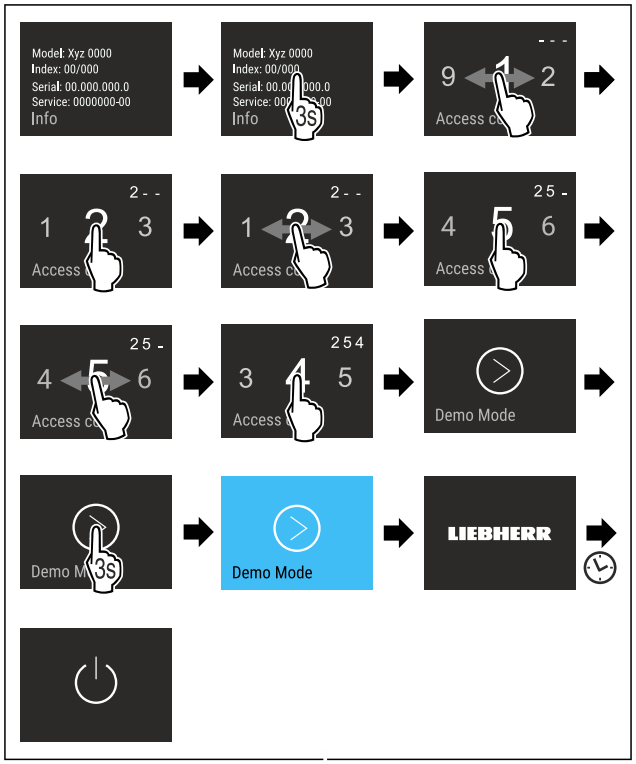

Fig. 86

▶ Carry out action steps according to the illustration.
▷ Demo mode is activated.
▷ Appliance is switched off.
▶ Switch on the appliance. (see 4.1 Switching on appliance (first use))

▷ “DEMO” appears in the status display.

Deactivating demo mode

Fig. 87

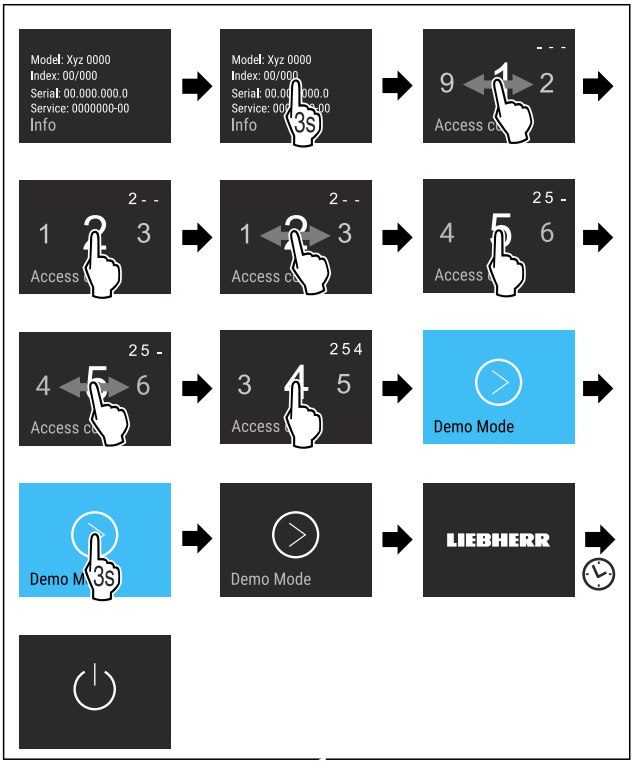

Fig. 88

▶ Carry out action steps according to the illustration.
▷ Demo mode is deactivated.
▷ Appliance is switched off.
▶ Switch on the appliance. (see 4.1 Switching on appliance (first use))
▷ Appliance is reset to factory settings.

Resetting to factory settings

Use this function to reset all settings to factory defaults. All settings you have made so far are reset to their original settings.

Performing a reset

Fig. 89

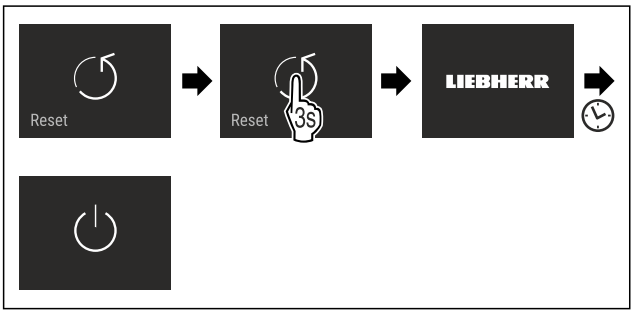

Fig. 90

▶ Carry out action steps according to the illustration.
▷ Device is reset.
▷ Device is switched off.

Note
To reset to factory settings in battery mode: Restart is only possible with mains voltage.

▶ Restart the device. (see 4.1 Switching on appliance (first use))

7.3 Fault messages

Fault messages appear in the display. There are two categories of fault message:

Category	Meaning
Message	Reminder of general procedures. You can carry out these procedures to eliminate the message.
Warning	Appears when there are malfunctions. A signal sounds in addition to the display. The signal becomes louder until you acknowledge by tapping the display. You can eliminate simple defects yourself. For more serious defects, you must contact customer service.

7.3.1 Warnings

Close the door

This message appears if the door is open for too long.

You can set how long it takes for this message to appear .

▶ Stop alarm: Confirm the message.

-or-

▶ Close the door.

Power cut

This message appears if the freezer temperature increased due to a power cut. After the power is restored, the appliance continues to work at the set temperature.

▶ Stop alarm: Confirm the message.
▷ Temperature alert appears (see Temperature alarm) .

Temperature alarm

This message appears if the freezer temperature does not match the set temperature.

Variations in temperature could be because:

- Hot, fresh food was inserted.
- Too much warm room air flowed in when rearranging and removing food.
- The power was cut off for a while.
- The appliance is faulty.

When the fault is eliminated the appliance continues to work at the set temperature.

▶ Confirm the display.
▷ The highest temperature is shown.
▶ Confirm display again.
▷ The status display is displayed.
▷ The current temperature is shown.

Error

This message appears if there is a fault with the appliance. An appliance component indicates a fault.

▶ Open the door.
▶ Note down the fault code.

▶ Confirm the message.
▷ The signal tone stops.
▷ The status display appears.
▶ Close the door.
▶ Contact customer service. (see 10.4 Customer Service)

7.3.2 Message

Insert IceMaker drawer*

This message appears if the IceMaker drawer is open.
▶ Push in the IceMaker drawer.
▷ The message disappears.
▷ The IceMaker produces ice cubes.

8 Features

8.1 Door rack

8.1.1 Move/remove the door rack

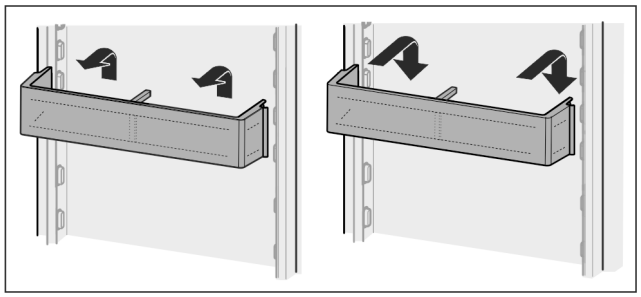

Fig. 91
▶ Slide the rack upwards.
▶ Pull forwards.
▶ Re-insert it in reverse order.

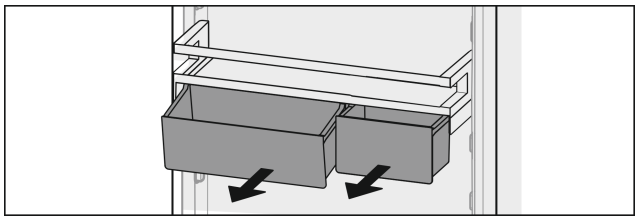

Fig. 92

You can use just one or both VarioBoxes. To store oversized bottles, just suspend one box over the bottle rack.

Move the VarioBox shelf:

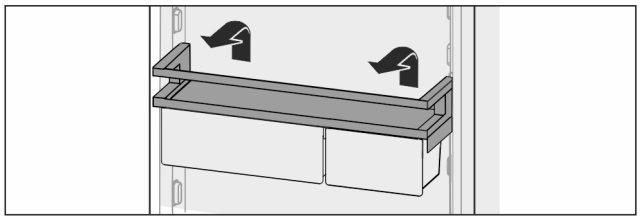

Fig. 93
▶ Pull it up and out.
▶ Put it back in at any position.

Moving the VarioBoxes:

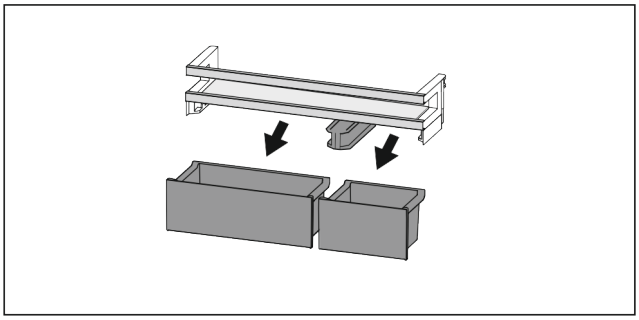

Fig. 94
If the door rack is removed:
▶ Remove containers.

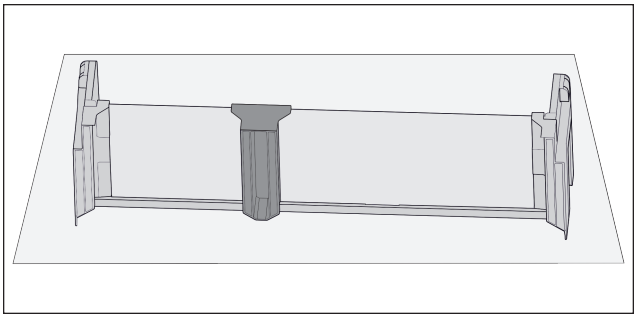

Fig. 95
▶ Place the shelf on the table.

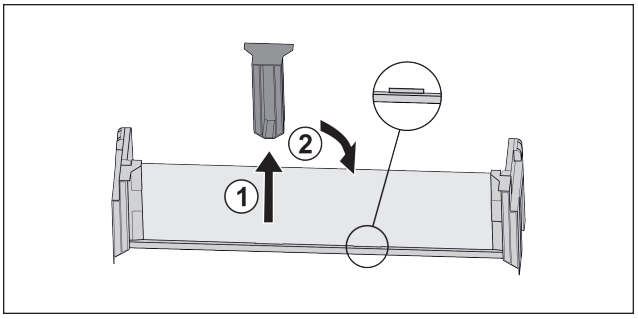

Fig. 96
▶ Pull off the middle holder *Fig. 96 (1)*.
▶ Insert the middle holder in the second position *Fig. 96 (2)*.

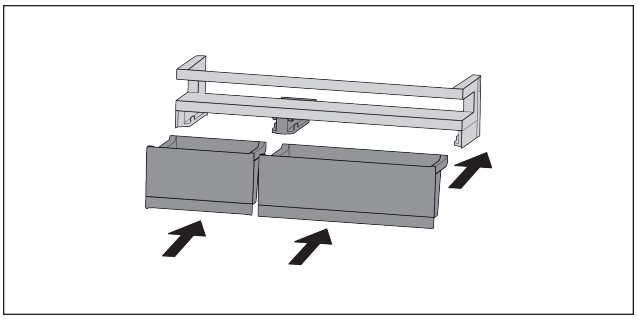

Fig. 97
▶ Replace containers.

8.1.2 Disassembling the door rack

The door rack can be taken apart for cleaning.

* Depending on model and options

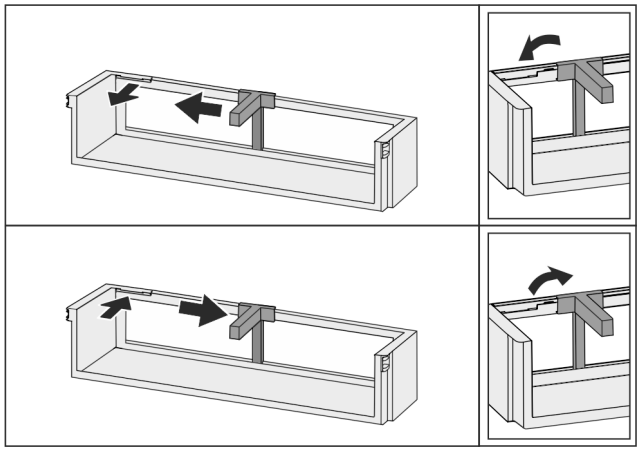

Fig. 98

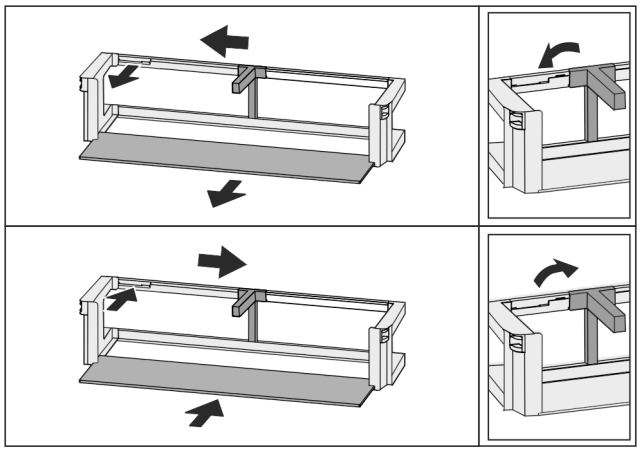

Fig. 99

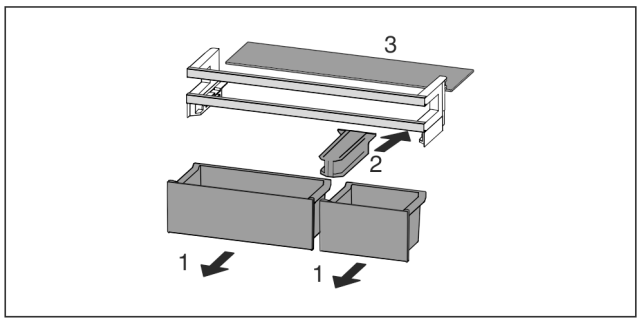

Fig. 100

▶ Disassemble the door rack.

8.2 Shelves

8.2.1 Adjusting/removing the shelves

The shelves are prevented from being pulled out accidentally by pull out stops.

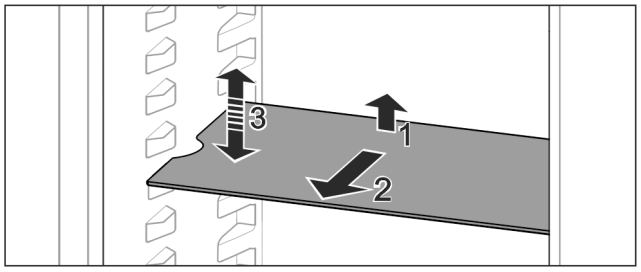

Fig. 101

▶ Lift the shelf and pull forward.
▷ Line up the side runner.

▶ Adjust the height of the shelf: Lift or lower it to the desired height and slide it in.

-or-

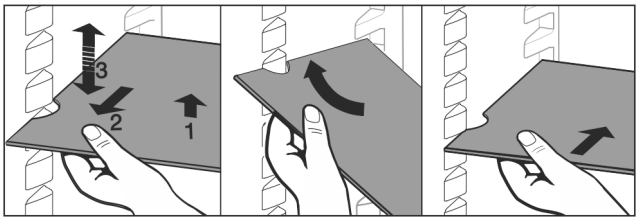

Fig. 102

▶ Remove the shelf completely: Pull it out to the front.

▶ Easier removal: Set the shelf at an angle.
▶ Insert the shelf again: Slide it in all the way.
▷ The pull-out stoppers point downwards.
▷ The pull-out stoppers are behind the front support.

You can also remove the shelf above the EasyFresh compartments.

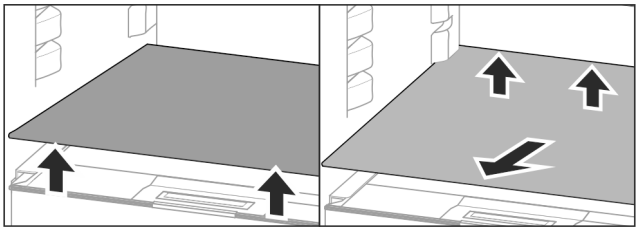

Fig. 103

Removing the shelf:
▶ Lift the shelf at the front and back.
▶ Pull it out towards you.

Do not store any goods on the compartment cover below!

Inserting the shelf:
▶ Place the shelf at an angle, sloping down towards the back.
▷ The pull-out stoppers point downwards.
▶ Slide the shelf into place.

8.3 Dividing shelf

8.3.1 Using the dividing shelf

The shelves are prevented from being pulled out accidentally by pull out stops.

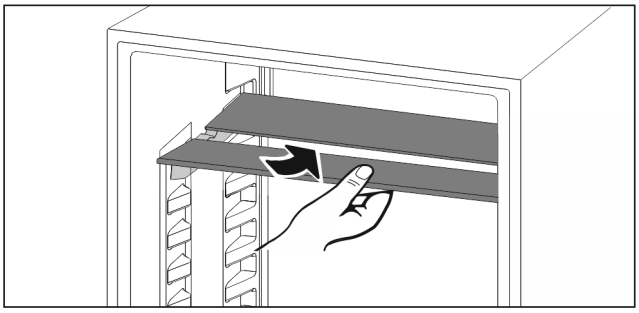

Fig. 104

▶ Push the dividing shelf underneath as shown.

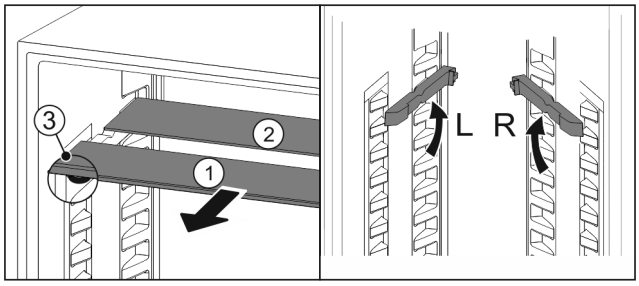

Fig. 105

Adjusting the height:

▶ Pull the glass panels out *Fig. 105 (1)* from the front, one at a time.
▶ Release the support rails and click in at the height you want.
▶ Slide in the glass panels one at a time.
▷ Flat pull-out stoppers at the front, right behind the support rails.
▷ High pull-out stoppers at the back.

Using both shelves:

▶ Hold the glass panel with one hand and pull it to the front.
▷ The glass panel *Fig. 105 (1)* and trim strip are at the front.
▷ The stops *Fig. 105 (3)* point down.

8.4 VarioSafe

The VarioSafe offers space in the refrigerator compartment for small groceries, packages, tubes and jars, for example.

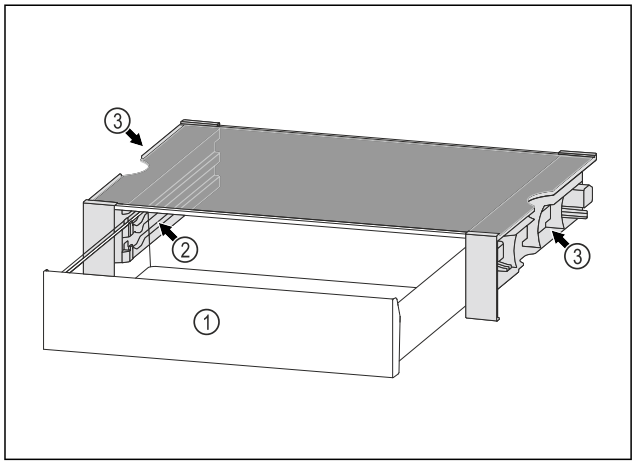

Fig. 106

(1) VarioSafe drawer

(2) Side panels with ribs for VarioSafe drawer

(3) Recesses on the left and right side panel

8.4.1 Inserting the VarioSafe

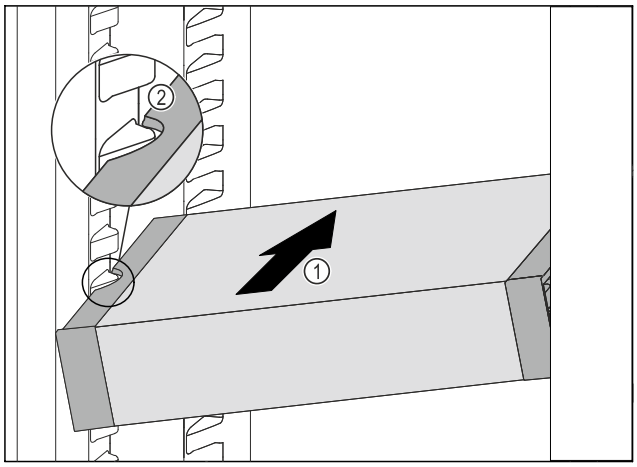

Fig. 107

▶ Insert the VarioSafe into the fridge section at an angle *Fig. 107 (1)* until the recesses in the side *Fig. 107 (2)* of the VarioSafe are at the level of the support rib in the fridge section.

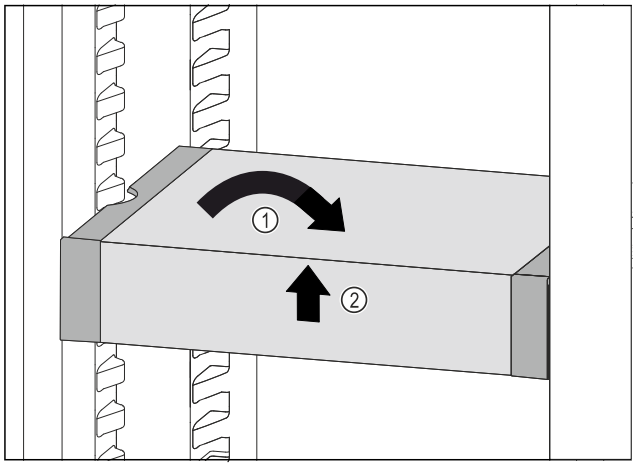

Fig. 108

▶ Set VarioSafe straight. *Fig. 108 (1)*
▶ Lift VarioSafe at the front. *Fig. 108 (2)*

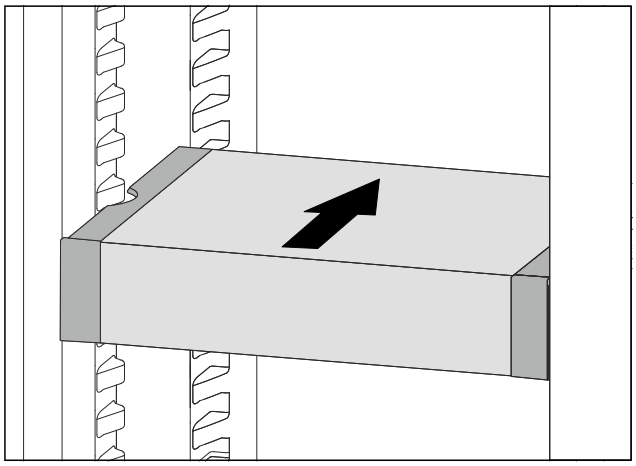

Fig. 109

▶ Lift VarioSafe up toward the front.
▶ Push VarioSafe in to the rear.
▶ Lower VarioSafe.
▷ VarioSafe audibly engages.
▷ VarioSafe is inserted.

8.4.2 Repositioning the VarioSafe

You can move the VarioSafe as a whole in the refrigerator compartment.

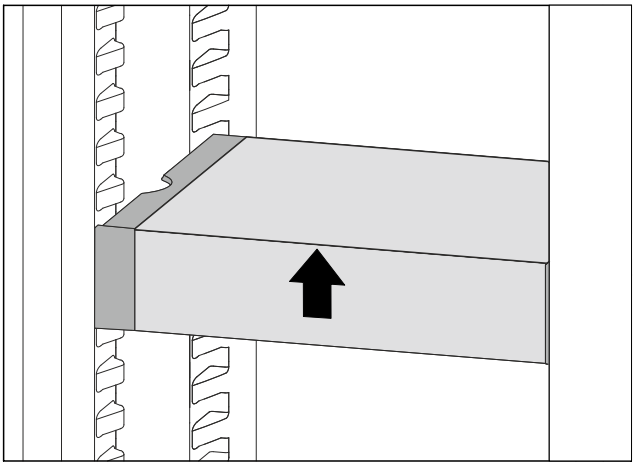

Fig. 110

▶ Lift VarioSafe at the front.

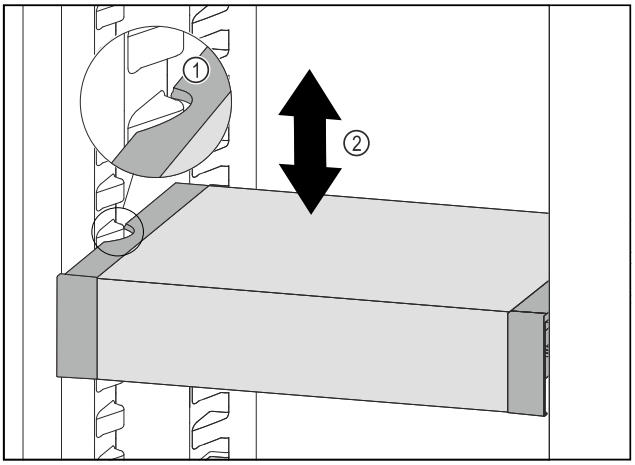

Fig. 111

▶ Pull VarioSafe forwards until the recesses in the side of the VarioSafe are at the level of the support rib in the refrigerator compartment. *Fig. 111 (1)*

▶ Move VarioSafe up or down in the refrigerator compartment until the desired height is reached. *Fig. 111 (2)*

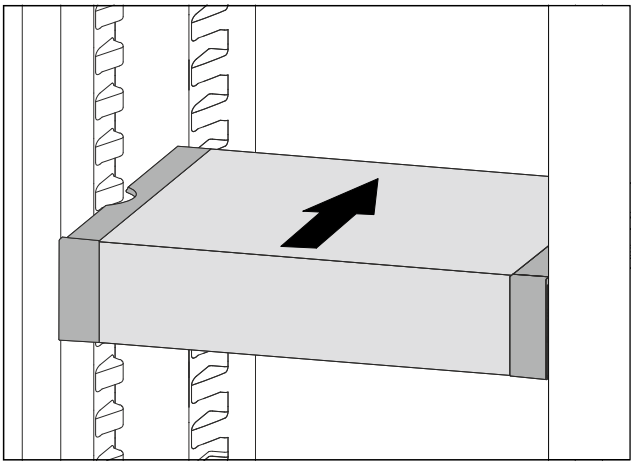

Fig. 112

▶ Lift VarioSafe at the front.

▶ Push VarioSafe in to the rear.

▷ VarioSafe audibly engages.

▷ VarioSafe is offset in height.

8.4.3 Moving the VarioSafe drawer

You can use the VarioSafe drawer at two different heights. If you would like to store taller foodstuffs in the VarioSafe drawer, slide the VarioSafe drawer in on the bottom rib. If you would like to store smaller foodstuffs in the VarioSafe drawer, slide the VarioSafe drawer in on the top rib.

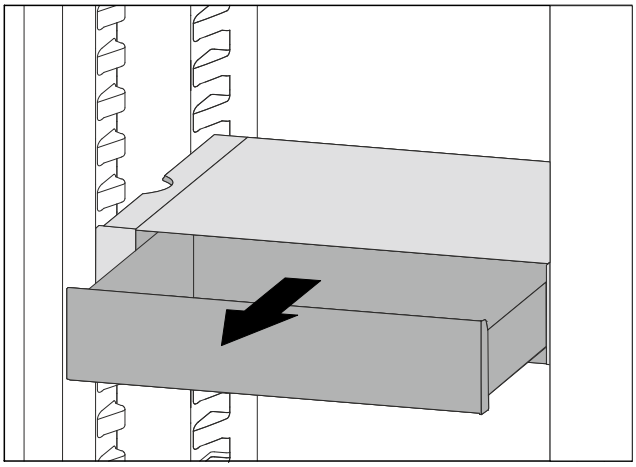

Fig. 113

▶ Pull out the VarioSafe drawer as far as it will go.

▶ Lift the VarioSafe drawer up at the front.

▶ Remove the VarioSafe drawer to the front.

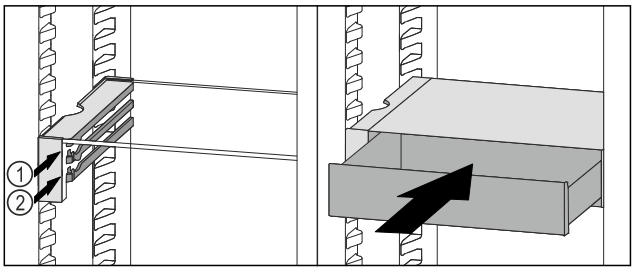

Fig. 114

▶ Lift the VarioSafe drawer up at the front.

▶ Place the VarioSafe drawer behind the stoppers on desired rib *Fig. 114 (1)* or *Fig. 114 (2)*.

▷ VarioSafe drawer is offset in height.

8.4.4 Removing the VarioSafe

You can remove the VarioSafe as a whole.

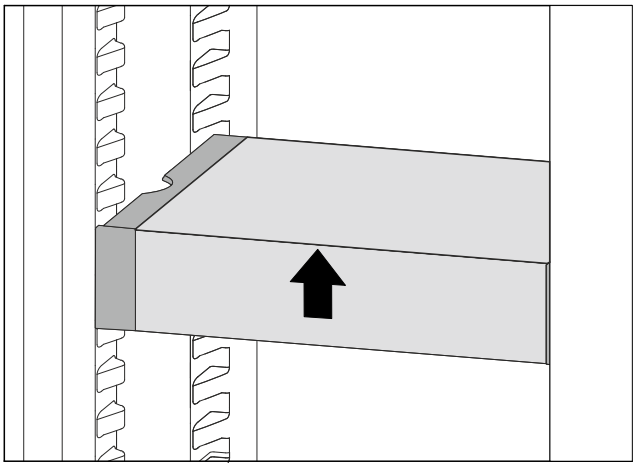

Fig. 115

▶ Lift VarioSafe at the front.

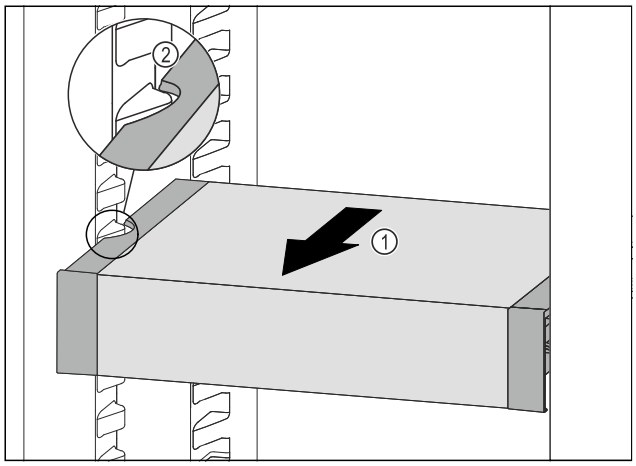

Fig. 116

▶ Pull VarioSafe forwards *Fig. 116 (1)* until the recesses in the side of the VarioSafe are at the level of the support rib in the fridge section. *Fig. 116 (2)*

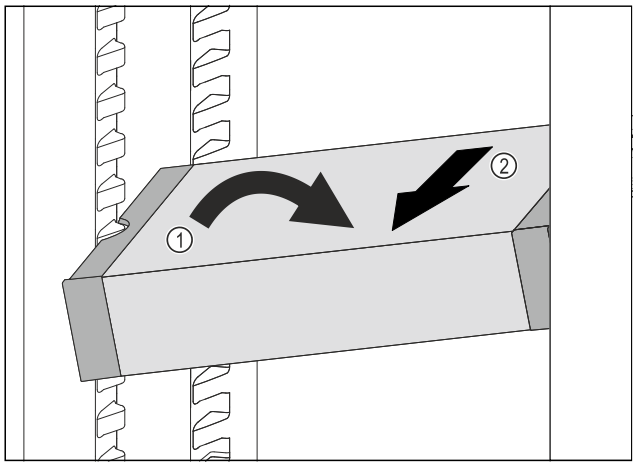

Fig. 117

▶ Set VarioSafe in refrigerator compartment at an angle. *Fig. 117 (1)*
▶ Take VarioSafe out to the front. *Fig. 117 (2)*
▷ VarioSafe is removed.

8.4.5 Disassembling the VarioSafe

You can disassemble the VarioSafe into its individual parts if you want to clean the VarioSafe or if you need to install or remove parts.

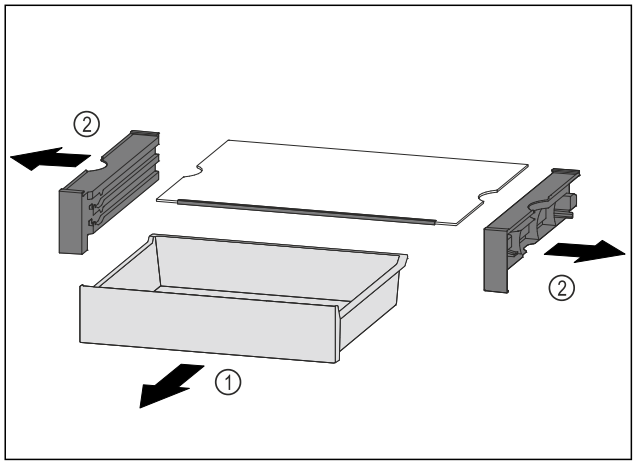

Fig. 118

▶ Remove VarioSafe as a whole. (see 8.4.4 Removing the VarioSafe)
▶ Disassemble VarioSafe according to the illustration.

8.5 Drawers

You can remove the drawers for cleaning.

You can remove the drawers to use VarioSpace.

The way to remove/insert the drawers varies depending on the pull-out system. Your appliance can contain various pull-out systems.

Note
The energy consumption increases and the cooling power goes down if ventilation is not sufficient.
▶ Leave the bottom drawer in the appliance!
▶ Always leave the fan air vents clear on the back wall!

8.5.1 Drawer on telescopic rails

The drawer runs on extendible rails (telescopic rails). There are fully extendible telescopic rails and telescopic rails with partial pull-out. Drawers which are fully extendible can be pulled out fully from the appliance. Drawers with partial pull-out cannot be removed fully from the appliance. The system in your appliance depends on the type of appliance.

Partial pull-out fridge compartment

Removing drawer

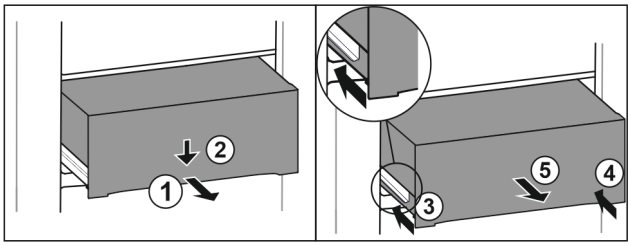

Fig. 119

▶ Pull out drawer half-way. *Fig. 119 (1)*
▶ Push the drawer down at the front. *Fig. 119 (2)*
▶ Push the left rail in by about 2 cm. *Fig. 119 (3)*
▶ Push the right rail in by about 2 cm. *Fig. 119 (4)*
▶ Remove drawer to the front. *Fig. 119 (5)*

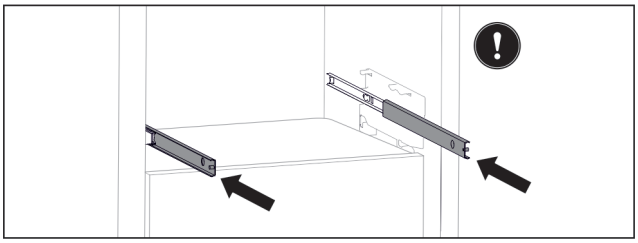

Fig. 120

If the rails are not yet fully inserted after removing the drawer:
▶ Push rails in completely.

Inserting drawer

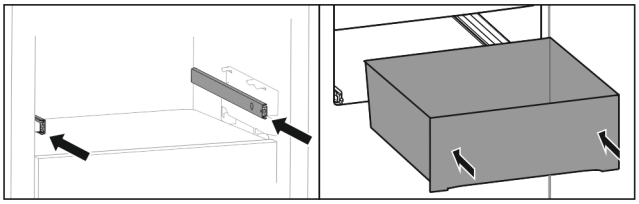

Fig. 121

▶ Slide rails in.
▶ Place drawer on rails.
▶ Slide in drawer to the back.

8.6 EasyFresh-Safe cover

You can remove the compartment cover for cleaning.

8.6.1 Removing the compartment cover

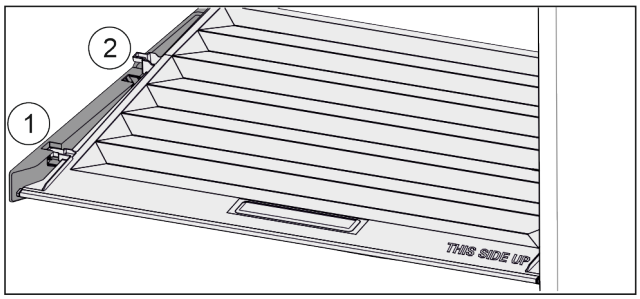

Fig. 122

When the drawers are removed:

▶ Pull the lid up at the front to the opening in the retaining parts *Fig. 122 (1)*.

▶ Lift from the back and pull it up and out *Fig. 122 (2)*.

8.6.2 Inserting the compartment cover

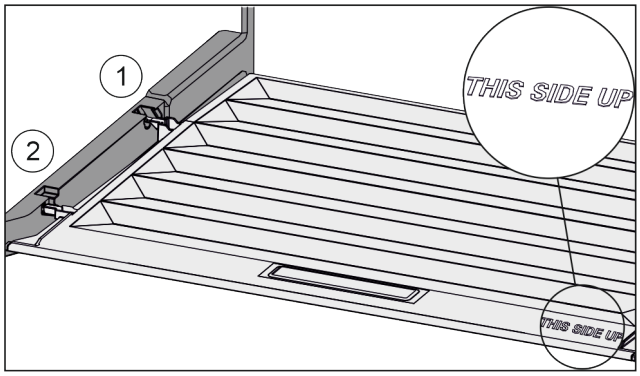

Fig. 123

If the text THIS SIDE UP points upwards:

▶ Insert the lip of the cover over the opening of the rear bracket *Fig. 123 (1)* and click into place *Fig. 123 (2)*.

▶ Position the cover where you want it (see 8.7 Adjusting the moisture levels) .

8.7 Adjusting the moisture levels

You can adjust the moisture in the drawer yourself by adjusting the compartment cover.

The compartment lid is attached to the drawer and can be hidden by a shelf or additional drawers.

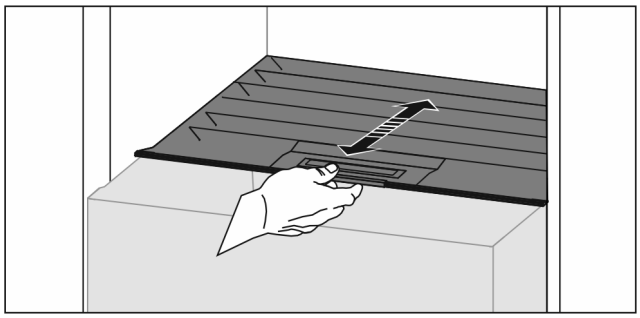

Fig. 124

Low air humidity

▶ Open the drawer.

▶ Slide the compartment cover forwards.

▷ With the drawer closed: Gap between the cover and the compartment.

▷ The air moisture in the Safe decreases.

High air moisture

▶ Open the drawer.

▶ Slide the cover back.

▷ With the drawer closed: The cover seals the compartment.

▷ The air moisture in the Safe increases.
If there is too much moisture in the compartment:

▶ Choose the setting “low air moisture”.

-or-

▶ Remove any excess moisture with a cloth.

8.8 Glass shelves

You can remove the glass shelves under the drawers for cleaning.

You can remove the glass shelves under the drawers to use VarioSpace.

8.8.1 Removing / inserting the glass shelf

Make sure that the following requirements are fulfilled:

❑ Glass shelf under the drawer: The drawer has been removed. (see 8.5 Drawers)

Removing glass shelf

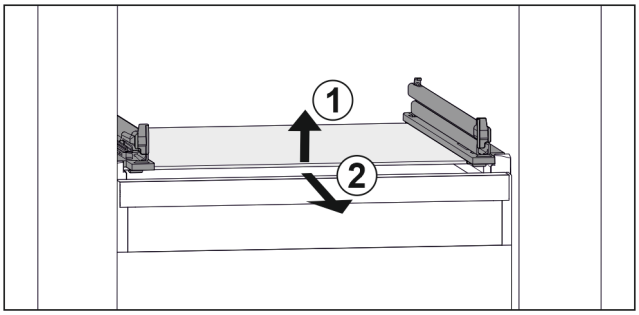

Fig. 125 Example illustration of glass shelf

▶ Lift glass shelf at the front. *Fig. 125 (1)*

▶ Take out glass shelf to the front. *Fig. 125 (2)*

Inserting glass shelf

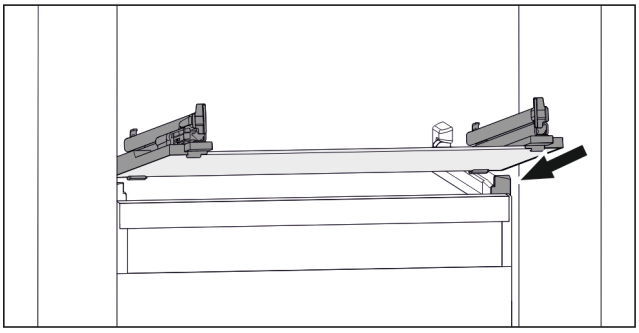

Fig. 126 Example illustration of glass shelf

▶ Position glass shelf at an angle behind the stoppers. (see Fig. 126)

▶ Lower glass shelf.

▶ Slide in glass shelf to the back.

8.9 EasyTwist-Ice*

With the EasyTwist-Ice you can make enough ice cubes for the whole household. The EasyTwist-Ice is supplied with water via a water tank.

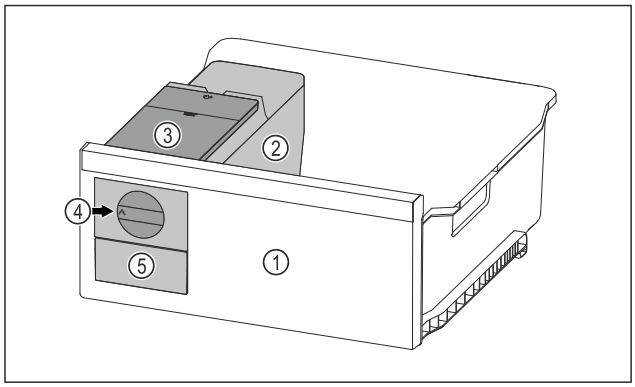

Fig. 127 Example illustration

(1) Freezer drawer with EasyTwist-Ice
(2) Body with ice cube tray
(3) Water tank
(4) Rotary knob
(5) Ice cube drawer

Note
Do not change the position of the freezer drawer with the EasyTwist-Ice in the appliance.

8.9.1 Making ice cubes

The amount of ice cubes you can make in a given period of time with the EasyTwist-Ice depends on the freezer temperature of the appliance. The lower the temperature in the appliance, the more ice cubes you can make.

Maximum number of ice cubes in the ice cube tray:	20 ice cubes
Maximum capacity of the ice cube drawer:	40 ice cubes (equivalent to two ice cube batches)
More information about the time needed for ice cube production:	(see 10.1 Technical specifications)

Make sure that the following requirements are fulfilled:

❑ Components of the EasyTwist-Ice have been cleaned.

Filling the water tank

WARNING
Risk of poisoning due to contaminated water!
▶ Only fill the water tank with potable water.

NOTICE
Sugar-content liquids!
Damage to EasyTwist-Ice.
▶ Only fill with cold drinking water.

Note
Using filtered, decarbonised water ensures the best-tasting drinking water for your ice cubes.
This water quality can be achieved using a table water filter of the kind available in trade retail outlets.
▶ Always fill the water tank only with filtered, decarbonised drinking water.

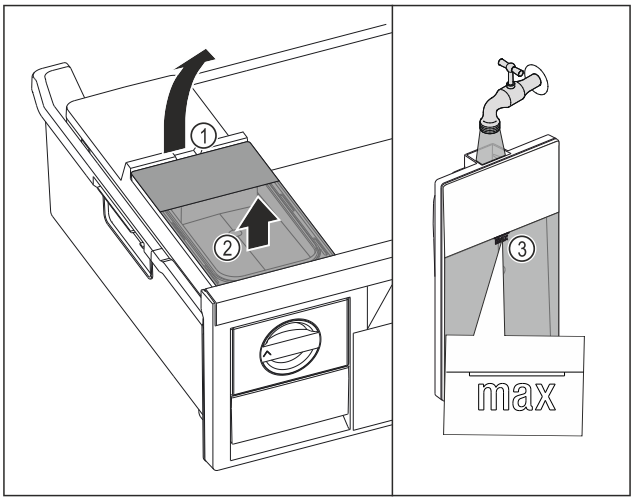

Fig. 128

▶ Pull out freezer drawer as far as it will go.
▶ Lift the water tank at the recess *Fig. 128 (1)*.
▶ Remove the water tank by lifting it upwards. *Fig. 128 (2)*
▶ Fill the water tank with drinking water up to the mark *Fig. 128 (3)*.

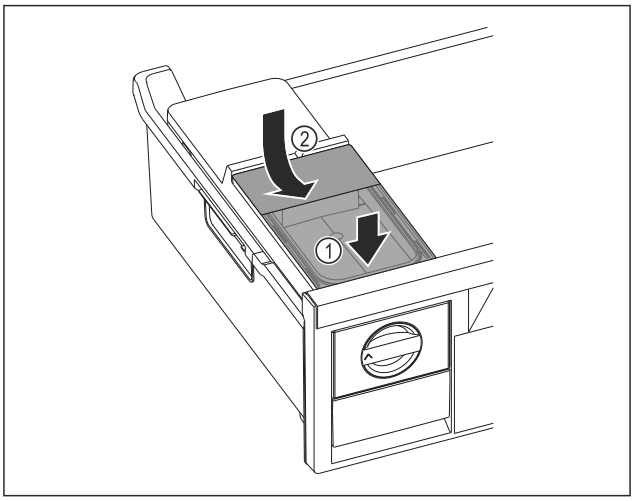

Fig. 129

▶ Position the water tank at the front. *Fig. 129 (1)*
▶ Lower the water tank at the rear. *Fig. 129 (2)*
▶ Slide in the freezer drawer.

Releasing the ice cubes

Make sure that the following requirements are fulfilled:

❑ The required time for the production of ice cubes has been observed. (see 10.1 Technical specifications)
❑ Freezer drawer is fully inserted.
❑ Ice cube drawer is fully inserted.

▶ Turn the rotary knob *Fig. 127 (4)* clockwise as far as it will go.
▷ Ice cubes fall from the ice cube tray into the ice cube drawer *Fig. 127 (5)*.
If all the ice cubes do not come out of the ice cube tray:
▶ Turn the rotary knob clockwise several times to the stop.

8.10 IceMaker*

The IceMaker will produce ice cubes for household use only.

Ensure that the following conditions are met:

- IceMaker is cleaned (see 9 Maintenance) .
- IceMaker drawer is cleaned.
- IceMaker drawer is fully inserted.

*** Depending on model and options**

8.10.1 Producing ice cubes

The volume depends on the freezing temperature. The colder the temperature, the more ice cubes the system can produce in a certain time period.

After the IceMaker is turned on for the first time, it can take up to 24 hours for the first ice cubes to be made.

- ▶ Activate the IceMaker function .
- ▶ To make a high number of ice cubes: Activate the MaxIce function .
- ▶ To make a high number of ice cubes: Move the divider in the IceMaker drawer or remove it completely.*
- ▶ Distribute the ice cubes evenly in the drawer to increase the capacity.
- ▶ Closing the drawer: IceMaker starts making ice cubes again automatically.

Note
When a certain level is reached in the IceMaker drawer, it stops producing ice cubes. The IceMaker does not fill the drawer all the way to the top.

8.10.2 Using the drawer with the IceMaker deactivated

If you deactivate the IceMaker, then you can use the entire IceMaker drawer as a freezer drawer.

- ▶ Deactivate IceMaker. (see Deactivating the IceMaker / MaxIce)

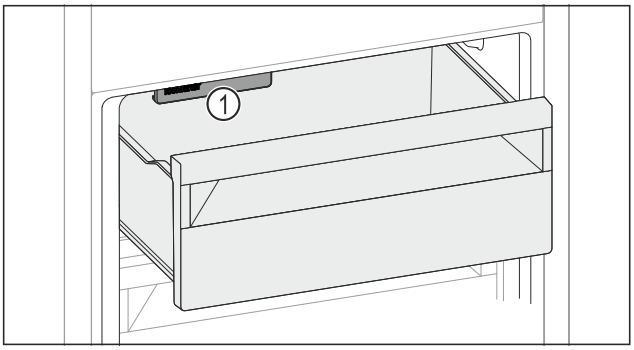

Fig. 130

- ▶ Place food in drawer.
  If you put food in the left side of the drawer:
- ▶ Watch out for the IceMaker *Fig. 130 (1)*.

8.11 VarioSpace

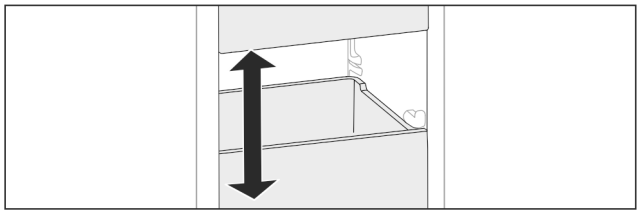

Fig. 131

You can remove drawers and glass panels from your appliance. This provides more room for large food items such as poultry, joints of meat, large game, and tall baked products. You can then freeze these items whole for later preparation.

- ▶ Note the weight limits on the drawers and glass panels (see 10.1 Technical specifications) .

8.12 Butter dish

8.12.1 Opening/closing the butter dish

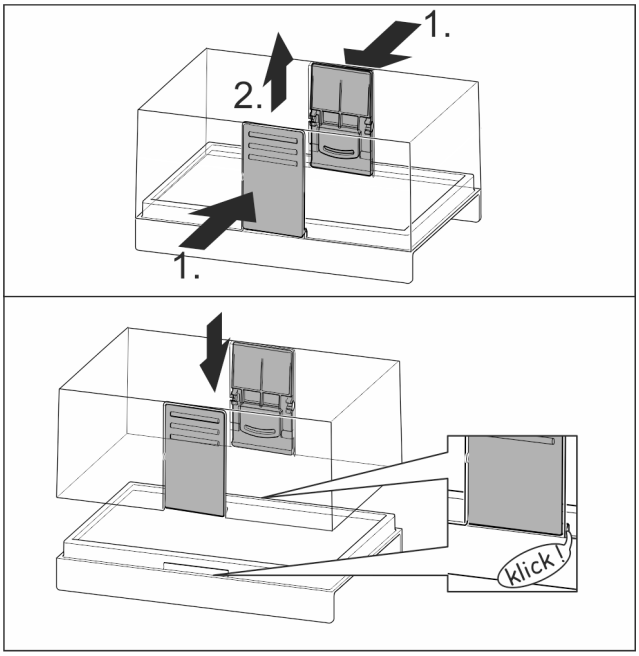

Fig. 132

8.12.2 Dismantling the butter dish

You can take the butter dish apart for cleaning.

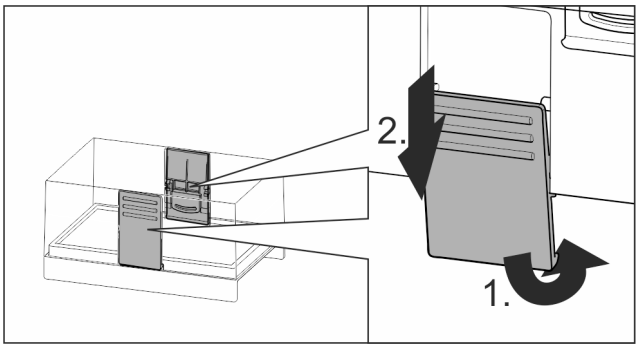

Fig. 133

- ▶ Disassembling the butter dish.

8.13 Egg rack

You can pull out and turn the egg rack. You can use both sides of the egg rack so you can label specifics like the purchase date.

8.13.1 Using the egg rack

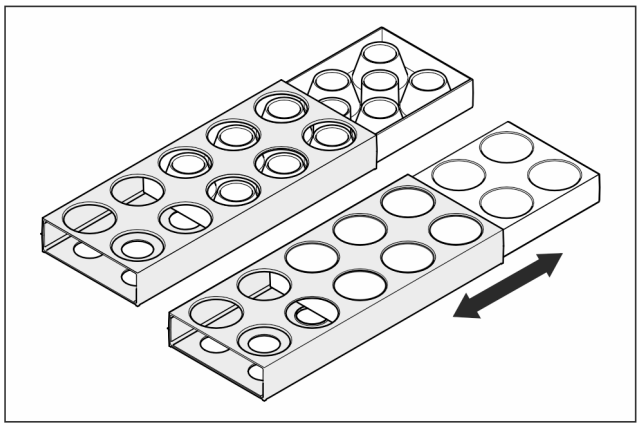

Fig. 134

▶ Top layer: for storing hen eggs.
▶ Bottom layer: for storing quail eggs.

8.14 Bottle holder

8.14.1 Using the bottle holder

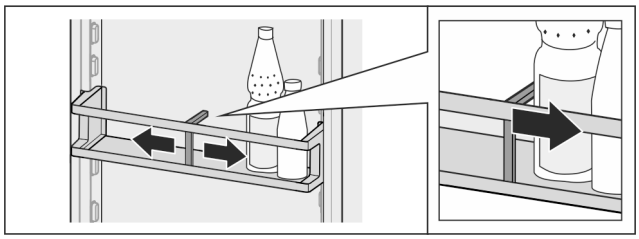

Fig. 135

▶ Push the bottle holder onto the bottles.
▷ The bottles are prevented from falling over.

8.14.2 Removing the bottle holder

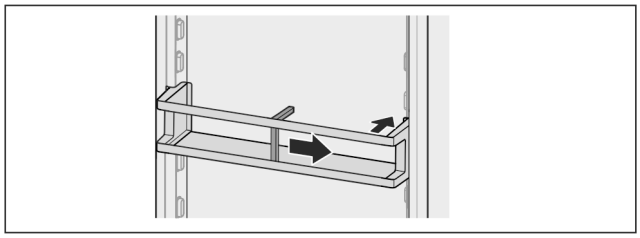

Fig. 136

▶ Move the bottle holder all the way to the right.
▶ Push the bottle holder to the back to remove.

8.15 Freezer pack

Freezer packs prevent the temperature rising too quickly should there be a power cut.

The freezer packs are in the drawer.

8.15.1 Using the freezer pack

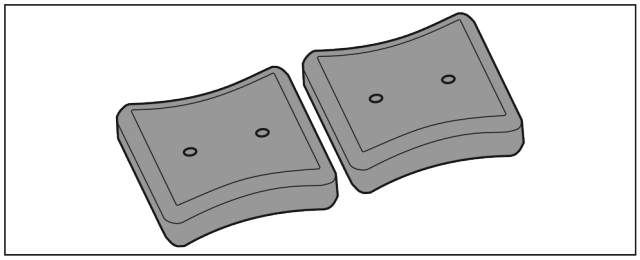

Fig. 137

When the freezer packs are fully frozen:

▶ Place on the frozen goods in the top, front part of the freezer.

8.16 Ice cube tray with cover*

8.16.1 Using the ice cube tray

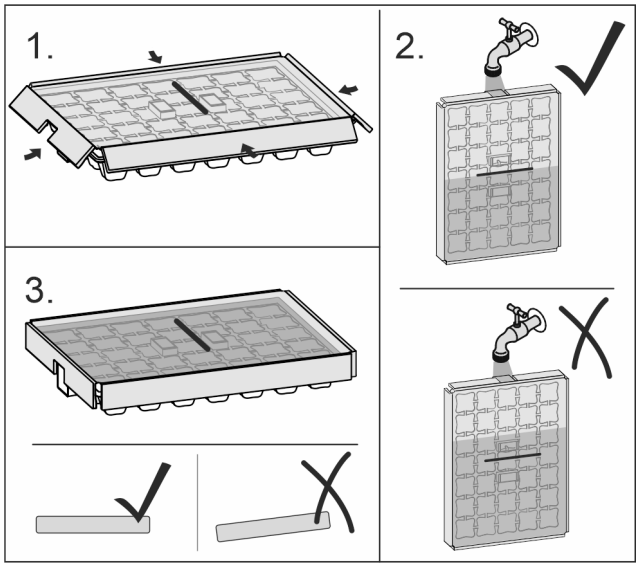

Fig. 138

When the water is frozen:

▶ Hold ice cube tray under hot water for a short time.
▶ Remove the lid.
▶ Gently turn the ends of the ice cube tray in opposite directions.
▶ Release the ice cubes.

8.16.2 Dismantling the ice cube tray

You can take the ice cube tray apart for cleaning.

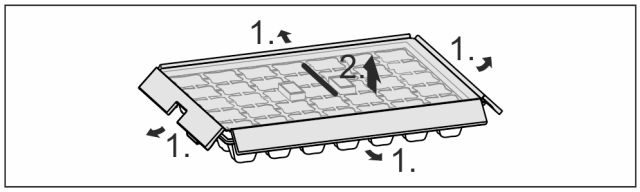

Fig. 139

▶ Disassembling the ice cube tray.

8.17 Flexible ice compartment divider*

The IceMaker's ice cube drawer has a flexible ice compartment divider. This allows you to store larger quantities of ice cubes or additional food items as needed. You can move or remove the ice compartment divider.

8.17.1 Moving in the flexible ice compartment divider

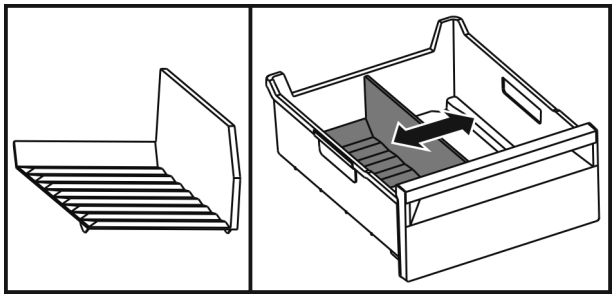

Fig. 140 Example illustration of the ice compartment divider

▶ Move the ice compartment divider to the desired position.

8.17.2 Removing the flexible ice compartment divider

Make sure that the following requirements are fulfilled:

❑ Ice cube drawer is removed. (see 8.5 Drawers)

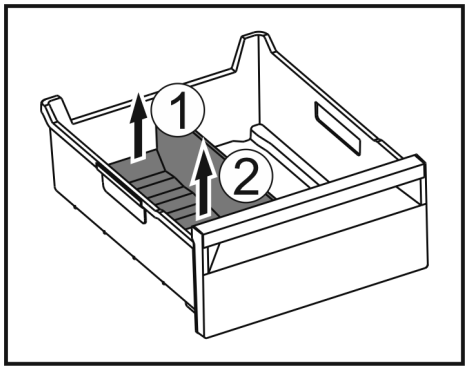

Fig. 141

▶ Lift the rear part of the ice compartment divider. *Fig. 141 (1)*

▶ Remove the ice compartment divider upwards. *Fig. 141 (2)*

8.17.3 Putting in the flexible ice compartment divider

Make sure that the following requirements are fulfilled:

❑ Ice cube drawer is removed. (see 8.5 Drawers)

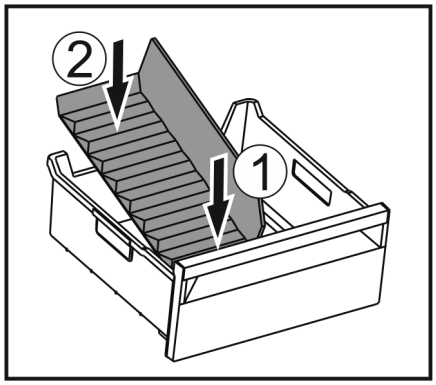

Fig. 142

▶ Insert the front part of the ice compartment divider. *Fig. 142 (1)*

▶ Lower the rear part of the ice compartment divider to the drawer bottom. *Fig. 142 (2)*

9 Maintenance

9.1 FreshAir carbon filter

The FreshAir carbon filter is in the compartment above the fan.

It guarantees the best air quality.

❑ Replace the carbon filter every 6 months.
When the reminder is set, a message on the display prompts you to change it.

❑ The carbon filter can be disposed of with the regular household waste.

Note

FreshAir activated charcoal filters can be purchased from the Liebherr-Hausgeräte store at home.liebherr.com/shop/de/deu/zubehor.html.

9.1.1 Removing the FreshAir carbon filter

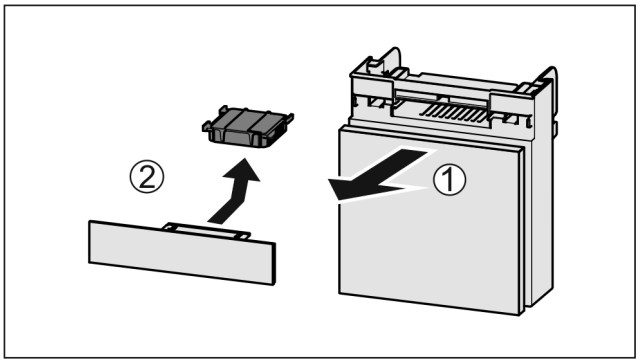

Fig. 143

▶ Pull out the compartment *Fig. 143 (1)*.

▶ Remove the carbon filter *Fig. 143 (2)*.

9.1.2 Inserting the FreshAir carbon filter

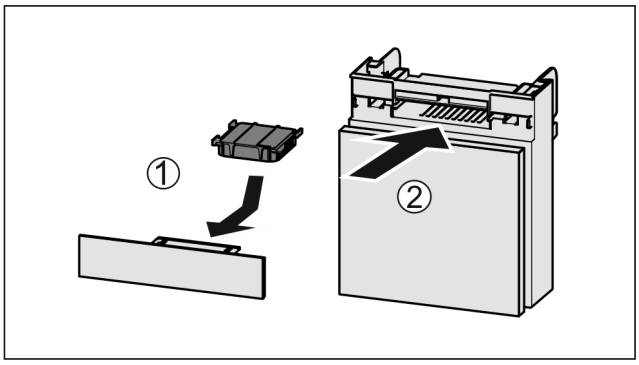

Fig. 144

▶ Insert the carbon filter as shown in the diagram *Fig. 144 (1)*.

▷ The carbon filter clicks into place.
If the carbon filter is pointing downwards:

▶ Push the compartment in *Fig. 144 (2)*.

▷ The carbon filter is now ready for use.

9.2 Disassembling / assembling pull-out systems

9.2.1 Notes on disassembly

You can disassemble some of the pull-out systems for cleaning. Your appliance can contain a variety of pull-out systems.

The following pull-out systems can be disassembled or cannot be disassembled:

Pull-out system	can be disassembled / cannot be disassembled
Partial pull-out fridge compartment	cannot be disassembled

9.3 Defrosting the appliance

9.3.1 Defrosting the fridge compartment

Defrosting is performed automatically. The water from the thawing process drains through the outlet and evaporates.

▶ Clean the drain opening regularly (see 9.4 Cleaning the appliance) .

9.3.2 Defrosting the freezer compartment with NoFrost

Defrosting is performed automatically with the NoFrost system. The moisture is deposited on the evaporator, is periodically defrosted and evaporates.

The appliance does not need to be defrosted.

9.4 Cleaning the appliance

9.4.1 Ready

WARNING
Danger of electric shock!
▶ Remove the refrigerator connector or interrupt the power supply.

WARNING
Risk of fire
▶ Do not damage the refrigeration circuit.

▶ Empty the appliance.
▶ Remove mains connector.
-or-
▶ Activate CleaningMode. (see CleaningMode)

9.4.2 Clean the housing

NOTICE
Improper cleaning!
Damage to the appliance.
▶ Only use soft cleaning cloths and ph-neutral all-purpose cleaners.
▶ Do not uses abrasive sponges or steel wool which may cause scratches.
▶ Do not use any sharp or abrasive cleaning agents, nor any that contain sand, chloride or acid.

WARNING
Risk of injury and damage as a result of hot steam!
Hot steam can lead to burns and can damage the surfaces.
▶ Do not use any steam cleaners!

▶ Wipe the housing down with soft, clean cloth. If very dirty, use lukewarm water with a neutral cleaner. Glass surfaces can also be cleaned with glass cleaner.

9.4.3 Cleaning the mosquito screen

▶ Clean the mosquito screens regularly with a vacuum cleaner.
▶ Remove stubborn stains with a soft cloth.

9.4.4 Cleaning the interior

NOTICE
Improper cleaning!
Damage to the appliance.
▶ Only use soft cleaning cloths and ph-neutral all-purpose cleaners.
▶ Do not uses abrasive sponges or steel wool which may cause scratches.
▶ Do not use any sharp or abrasive cleaning agents, nor any that contain sand, chloride or acid.

▶ Plastic surfaces: clean by hand with a soft clean cloth, lukewarm water and a little detergent.
▶ Metal surfaces: clean by hand with a soft clean cloth, lukewarm water and a little detergent.
▶ Drain hole: remove deposits using a thin item (for example a cotton bud).

9.4.5 Cleaning the dry rear panel

You can remove the dry rear panel for cleaning.

Removing the rear panel

▶ Remove all equipment parts.

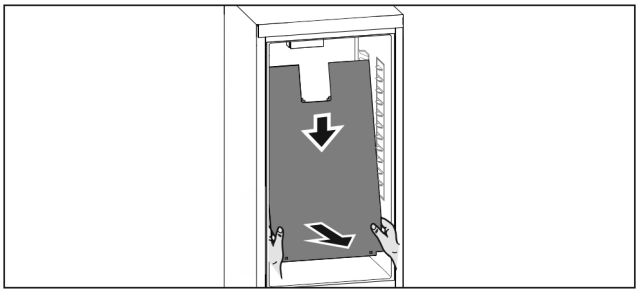

Fig. 145

▶ Hold the rear panel with both hands at the bottom and pull downward vigorously at the same time.
▶ Pull the rear panel out to the front by the bottom end.
▷ The rear panel has been removed.
If you want to continue operating the appliance with the rear panel removed:
▶ Set the *D-Value* to *D2*. (see D-Value)

Inserting the rear panel

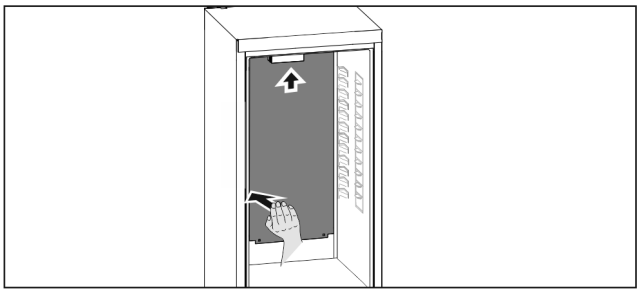

Fig. 146

▶ Make sure the appliance is completely empty.
▶ Slide in the rear panel from below to the top.
▶ Press back vigorously on the left-hand side of the rear panel.
▷ The rear panel clicks into place.
▶ Insert the equipment parts.
▶ Set the *D-Value* to *D1*. (see D-Value)

9.4.6 Clean the components

NOTICE
Improper cleaning!
Damage to the appliance.
▶ Only use soft cleaning cloths and ph-neutral all-purpose cleaners.
▶ Do not uses abrasive sponges or steel wool which may cause scratches.
▶ Do not use any sharp or abrasive cleaning agents, nor any that contain sand, chloride or acid.

Clean with a soft, clean cloth, lukewarm water and some detergent:

- Door rack
- VarioSafe
- EasyFresh-Safe cover
- Drawer

*** Depending on model and options**

Please note: Do not remove the magnet on the drawer. The magnet ensures the functionality of the IceMaker.*
- Divider in the IceMaker drawer*
- Components of the EasyTwist-Ice*

Clean with a damp cloth:
- Retractable rails
  Please note: The grease in the tracks is used for lubrication and must not be removed!

Wash in the dishwasher up to 60 °C:
- Door rack
- VarioBox
- Bottle rack
- Shelf
- Dividing shelf
- Holder of the dividing shelf
- Egg rack
- Butter dish
- Ice cube tray*
- Ice cube scoop*

▶ To disassemble components: see the relevant section.
▶ Clean the components.

9.4.7 Cleaning the EasyTwist-Ice*

Clean the EasyTwist-Ice in the following situations:
- First use
- Not using for more than 48 hours
- When cleaning is required

Dismantling the EasyTwist-Ice

Make sure that the following requirements are fulfilled:
❑ The drawer has been removed. (see 8.5 Drawers)
❑ The drawer is placed on a table.

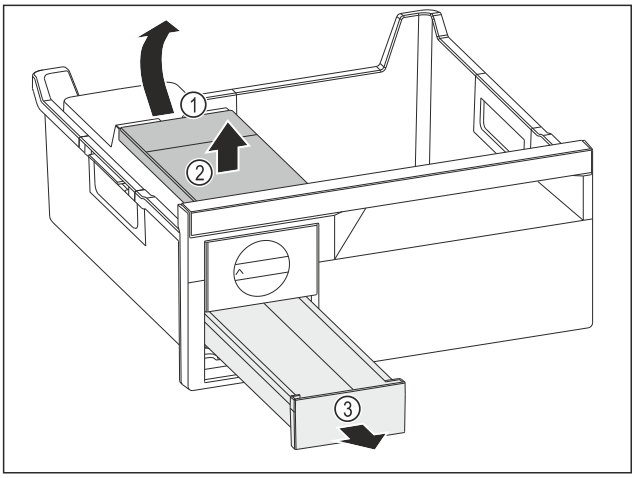

Fig. 147

▶ Removing the water tank: Lift the water tank by the recess *Fig. 147 (1)*.
▶ Remove the water tank *Fig. 147 (2)* upwards.
▶ Remove the ice cube drawer *Fig. 147 (3)* to the front.

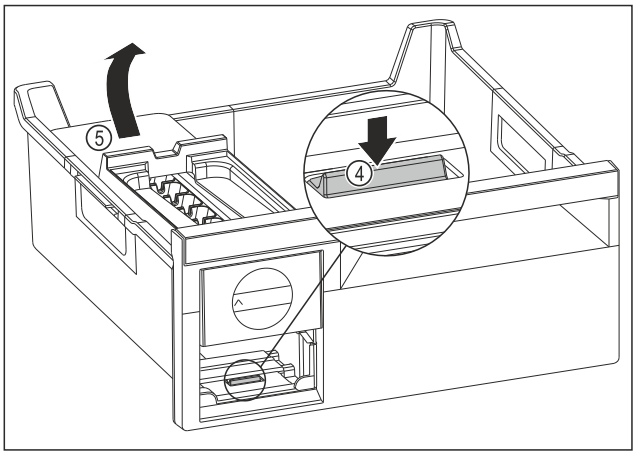

Fig. 148

▶ Removing the EasyTwist-Ice body: Use your finger to push the tab *Fig. 148 (4)* down and use your other hand to lift the EasyTwist-Ice body *Fig. 148 (5)* from behind at the same time.
▶ Remove the EasyTwist-Ice body from the freezer drawer.

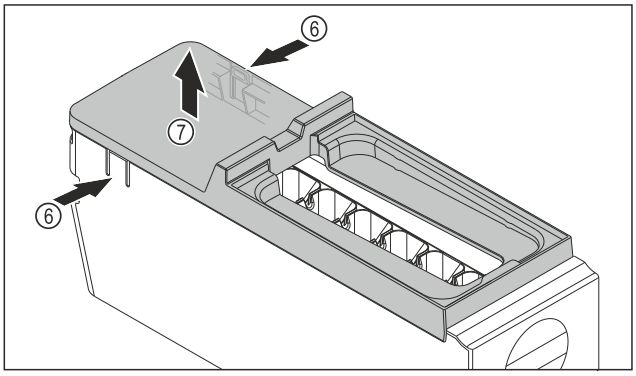

Fig. 149

▶ Removing the EasyTwist-Ice body cover: Push the tabs *Fig. 149 (6)* on both sides of the EasyTwist-Ice body with one hand.
▶ Use the other hand to remove the cover *Fig. 149 (7)* upwards.
▷ EasyTwist-Ice is dismantled into four parts. (see Fig. 150)

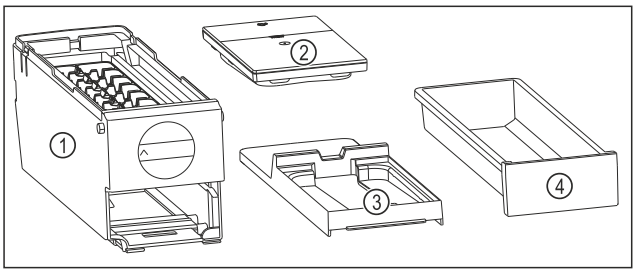

Fig. 150 Components of the EasyTwist-Ice

(1)	EasyTwist-Ice body with ice cube tray	**(3)**	Cover
(2)	Water tank	**(4)**	Ice cube drawer

NOTICE
Risk of damage due to improper dismantling!
Equipment breaking, jumping and cracking. If you dismantle the EasyTwist-Ice body further, you may damage the rotary knob or other parts of the EasyTwist-Ice body.
▶ Only dismantle the EasyTwist-Ice into the components shown. (see Fig. 150)
▶ Clean the EasyTwist-Ice body *Fig. 150 (1)* as a whole.

Cleaning the EasyTwist-Ice

Make sure that the following requirements are fulfilled:

❑ The EasyTwist-Ice is dismantled. (see Dismantling the EasyTwist-Ice)

▶ Clean the ice cube drawer, water tank, cover and Easy-Twist-Ice body with warm water and a little detergent.
▶ Dry all cleaned components thoroughly with a dry cloth.
▷ The EasyTwist-Ice is clean.

Installing the EasyTwist-Ice

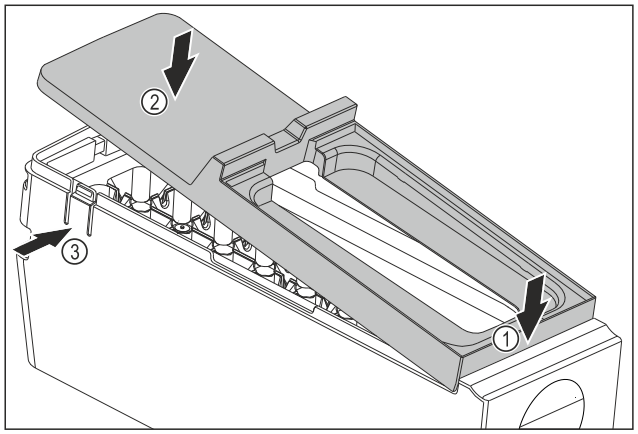

Fig. 151

▶ Installing the EasyTwist-Ice body cover: Place the cover on the front. *Fig. 151 (1)*
▶ Lower the cover at the rear. *Fig. 151 (2)*
▷ The cover locks into both tabs *Fig. 151 (3)* audibly.

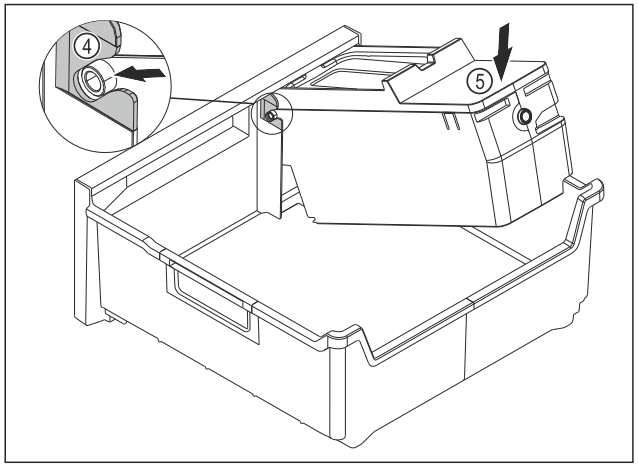

Fig. 152

▶ Installing the EasyTwist-Ice body: Push the axes for the EasyTwist-Ice body into the guides *Fig. 152 (4)*.
▶ Press the EasyTwist-Ice body *Fig. 152 (5)* down at the back.
▷ The EasyTwist-Ice body locks in audibly.

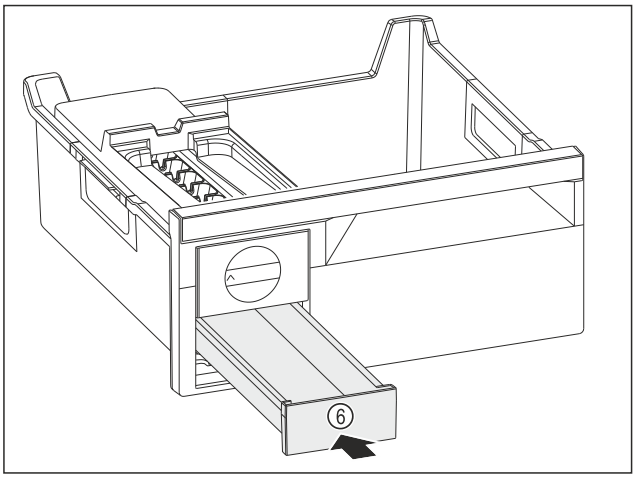

Fig. 153

▶ Insert the ice cube drawer *Fig. 153 (6)*.

WARNING

Risk of poisoning due to contaminated water!

▶ Only fill the water tank with potable water.

▶ Fill the water tank with water.
▶ Insert the water tank.
▶ Insert the drawer. (see 8.5 Drawers)
If you are using unfiltered water:
▶ Dispose of ice cubes that were produced 24 hours after initial ice cube production.

-or-

If you are using filtered water:
▶ Dispose of ice cubes that were produced 48 hours after initial ice cube production.

9.4.8 Cleaning the IceMaker*

There are various options for cleaning the IceMaker.

Cleaning is required in the following cases:

❑ Initial operation

Ensure that the following conditions are met:

❑ IceMaker drawer is emptied.
❑ IceMaker drawer is in place.
❑ The IceMaker is activated.

First use or after a long period of non-use

Clean the IceMaker with the TubeClean function.

▶ Put an empty 1.5 l vessel (max. height 10 cm) in the drawer under the IceMaker.
▶ Activate the TubeClean function.
▷ The rinse process is prepared (max. 60 min.): Symbol flashes.
▷ Water pipes are rinsed: Symbol flashes.
▷ Rinsing process is complete: Function turns off automatically.
▶ Remove the IceMaker drawer and remove the container.
▶ Clean the IceMaker drawer with warm water and a little detergent.
▶ Push the IceMaker drawer in.
▷ The system starts making ice cubes automatically.
▶ Dispose of any ice cubes that were made 24 hours after the first ice cubes.

If cleaning is required

Clean the IceMaker by hand.

▶ Remove the IceMaker drawer and clean with warm water and a little detergent.
▶ Push the IceMaker drawer in.
▷ The system starts making ice cubes automatically.

9.4.9 After cleaning

▶ Wipe the appliance and the components dry.
▶ Connect and switch on the appliance.
▶ Activate SuperFrost (see 7.2 Appliance functions) .
The temperature is cold enough:
▶ Place the food inside.
▶ Repeat cleaning regularly.

10 Customer help

10.1 Technical specifications

Temperature range	
Cooling	2 °C to 9 °C
Freeze	-26 °C to -15 °C

Maximum freezing quantity/24 h	
Freezer compartment	See “Freezing capacity .../24 h” on the type plate

Ice cube production with IceMaker*	
Ice cube production/24 h	At a temperature of -18 °C: 1.2 kg of ice cubes
Maximum ice cube production/24 h	With the MaxIce function on: 1.5 kg of ice cubes

Ice cube production with EasyTwist-Ice*	
Time required at -18 °C	approx. 5.5 h
Time required with SuperFrost activated	approx. 3 h

Time required to reach various temperatures with VarioTemp		
Initial temperature	Target temperature	Time required to reach target temperature
-18 °C	0 °C	>8 h
-18 °C	8 °C	>12 h
8 °C	14 °C	>6 h
14 °C	-18 °C	>4 h

10.2 Operating noises

The appliance makes different noises when it is on.

- At **higher temperatures** the appliance uses less energy but works for longer. It is **quieter**.
- At **lower temperatures** the food is cooled faster. It is **louder**.

  Examples:
  - Functions on (see 7.2 Appliance functions)
  - Fan running
  - Food recently added
  - High ambient temperature
  - Door open for a while

Noise	Possible cause	Type of noise
Bubbling and splashing	Coolant flowing into the cooling circuit.	Normal operating noise
Hissing	Coolant sprays into the cooling circuit.	Normal operating noise
Humming	The appliance is cooling. The volume depends on the cooling output.	Normal operating noise
Suction noises	Soft-closing door is being opened and closed.	Normal operating noise
Humming and rustling	The fan is running.	Normal operating noise
Clicking	Components are switched on and off.	Normal switching noise
Rattling or humming	Valves or flaps are working.	Normal switching noise

Noise	Possible cause	Type of noise	Lifting
Vibration	Improper setup	Defective noise	Level the appliance using the adjustable feet.
Rattling	Components, items inside the appliance	Defective noise	Secure components. Leave enough space between the items.

10.3 Technical fault

Your appliance is designed and built to ensure it works reliably and has a long service life. In the unlikely event that a fault occurs during operation, please check whether it is due to an operating error. If so, you will be charged for the callout and repair costs even if it falls within the warranty period.

You can fix the following faults yourself.

10.3.1 Appliance function

Defect	Cause	Remedy
The appliance is not working.	→ The appliance is not switched on.	▶ Switch the appliance on.
	→ The power plug is not properly plugged into the socket.	▶ Check the power plug.
	→ There is something wrong with the power outlet fuse.	▶ Check the fuse.

Defect	Cause	Remedy
	→ Power cut	▶ Keep the appliance closed. ▶ Protecting food: Lay freezer packs on top of the food or use another freezer if the power is off for a prolonged period. ▶ Do not re-freeze defrosted food,
	→ The appliance plug does not fit the appliance properly.	▶ Check the appliance plug.
Temperature is not cold enough.	→ The appliance door is not closed properly.	▶ Close the appliance door.
	→ Not enough ventilation.	▶ Keep ventilation grille clear, and clean it.
	→ The ambient temperature is too high.	▶ Problem solution: (see 1.4 Appliance range of use)
	→ The appliance was opened too many times or for too long.	▶ Wait to see if the required temperature corrects itself. If not, contact Customer Service. (see 10.4 Customer Service)
	→ Too much fresh food was placed inside without SuperFrost.	▶ Solution: (see SuperFrost)
	→ The temperature is set incorrectly.	▶ Turn down the temperature and check after 24 hours.
	→ The appliance is too close to a heat source (oven, radiator, etc).	▶ Move the appliance or the heat source.
The door seal is defective or needs to be replaced for another reason.	→ The door seal can be replaced. It can be replaced without the need for special tools.	▶ Contact Customer Service. (see 10.4 Customer Service)
The appliance builds up too much ice or condensa-tion.	→ The door seal may have slipped out of its groove.	▶ Check that the door seal is well fitted in the groove.
The appliance is hot to touch on the outside*.	→ The heat of the refrigeration circuit is used to avoid condensation.	▶ This is normal.

10.3.2 Features

Defect	Cause	Remedy
The IceMaker is not producing ice cubes.*	→ The IceMaker is not on.	▶ Activate the IceMaker.
	→ The drawer of the IceMakers is not connected properly.	▶ Push the drawer in correctly.
The internal light does not come on.	→ The appliance is not switched on.	▶ Switch the appliance on.
	→ The door was open for longer than 15 minutes.	▶ Interior lighting turns off automatically after approx. 15 min. with the door open.
	→ The LED interior light is faulty or the lid is damaged.	▶ Contact Customer Service. (see 10.4 Customer Service)

10.4 Customer Service

First check whether you can rectify the fault yourself (see 10 Customer help) . If you cannot rectify the problem, contact Customer Service.

You can find the address at home.liebherr.com/service.

WARNING
Unprofessional repair!
Injuries.
- ▶ Have any repairs and action - not expressly specified - on the appliance and mains cable carried out by service personnel only. (see 9 Maintenance)
- ▶ A damaged mains cable may only be replaced by the manufacturer, the manufacturer's Customer Service or a similarly qualified person.
- ▶ In the case of appliances with an IEC connector, the change may be made by the customer.

10.4.1 Contacting Customer Service

Make sure that the following appliance information is available:

- ❑ Appliance name (model and index)
- ❑ Service no. (Service)
- ❑ Serial no. (S no.)

▶ Call up the appliance information via the display.
-or-
▶ Refer to the type plate for appliance information. (see 10.5 Model plate)

▶ Note down the appliance information.
▶ Notify customer service: Report errors and the appliance information.
▷ This will help us to provide you with a faster, more accurate service.
▶ Follow further instructions from Customer Service.

10.5 Model plate

The model plate is behind the drawers on the inside of the appliance.

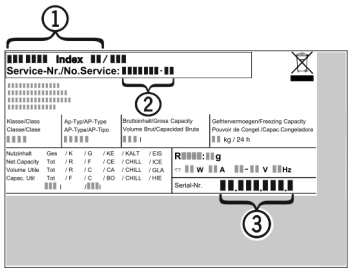

Fig. 154
(1) Appliance description **(3)** Serial no.
(2) Service no.
▶ Note the data on the model plate.

11 Shutting down

▶ Empty the appliance.
▶ Deactivate IceMaker. (see Deactivating the IceMaker / MaxIce) *
▶ Switch off appliance. (see Turn off appliance)
▶ Remove mains connector.
▶ Remove appliance connector if required: Remove and move from left to right at the same time.
▶ Clean appliance. (see 9.4 Cleaning the appliance)
▶ Leave the door open, so that no unpleasant odours arise.

12 Disposal

12.1 Preparing appliance for disposal

Liebherr uses batteries in some of its appliances. In the EU, for environmental reasons, legislation obliges the end user to remove these batteries before disposing of old appliances. If your appliance contains batteries, a corresponding notice is attached.

Lamps — If you can remove the lamps yourself without destroying them, also remove these before disposal.

▶ Take the appliance out of operation.
▶ Appliances with batteries: remove the batteries. For description, see **Maintenance** chapter.
▶ If possible: remove lamps without destroying them.

12.2 Disposing of the appliance in an environmentally friendly manner

The appliance still contains valuable materials and must be disposed of separately from unsorted municipal waste.

Dispose of batteries separately from the old appliance. To do this, you can return the batteries free of charge to retailers as well as recycling centres and collection centres for recyclable materials.

Lamps — Dispose of removed lamps via the respective collection systems.

WARNING
Leaking coolant and oil!
Fire. The coolant contained in the appliance is eco-friendly, but also flammable. The oil contained in the appliance is flammable. Escaping coolant and oil can ignite if the concentration is high enough and in contact with an external heat source.
- ▶ Do not damage the pipelines of the coolant circuit and the compressor.

▶ Transport the appliance without damaging it.
▶ Dispose of batteries, lamps and the appliance according to the above specifications.

home.liebherr.com/fridge-manuals

EN fridge/freezer

Issue date: 20240202

Part number index: 7086383-00

Liebherr-Hausgeräte Marica EOOD
Bezirk Plovdiv
4202 Radinovo
Bulgarien

User Guide

Quality, Design and Innovation

home.liebherr.com/fridge-manuals

LIEBHERR

Contents

1 Appliance at a glance ... 3
1.1 Scope of delivery ... 3
1.2 Overview of the appliance and equipment ... 3
1.3 SmartDevice ... 4
1.4 Appliance range of use ... 4
1.5 Conformity ... 4

2 General safety instructions ... 4

3 Functionality of the Touch & Swipe display ... 6
3.1 Navigation and symbol explanation ... 6
3.2 Menus ... 6
3.3 Sleep mode ... 7

4 Putting into operation ... 7
4.1 Switching on appliance (first use) ... 7
4.2 Starting the IceMaker for the first time* ... 7
4.3 Starting the EasyTwist-Ice for the first time* ... 8

5 Storage ... 8
5.1 Information regarding storage ... 8
5.2 Fridge compartment ... 8
5.3 EasyFresh ... 8
5.4 Freezer compartment ... 8
5.5 Storage times ... 9

6 Saving energy ... 9

7 Controls ... 9
7.1 Controls and displays ... 9
7.1.1 Status display ... 9
7.1.2 Display symbols ... 9
7.2 Appliance functions ... 9
7.2.1 Notes on the appliance functions ... 9
Turn off appliance ... 10
7.2.3 Switching temperature zones off and on ... 10
WiFi ... 10
Temperature ... 11
Temperature unit ... 12
D-Value ... 12
SuperCool ... 12
PowerCool ... 13
VarioTemp ... 13
SuperFrost ... 14
Start defrosting cycle ... 14
PartyMode ... 14
HolidayMode ... 15
SabbathMode ... 15
EnergySaver ... 16
IceMaker / MaxIce * ... 16
IceMaker water supply* ... 17
TubeClean * ... 18
CleaningMode ... 18
Display brightness ... 18
Door alarm ... 19
Input lock ... 19
Language ... 19
Device information ... 20
Software ... 20
Reminder ... 20
Demo mode ... 20
Resetting to factory settings ... 21
7.3 Fault messages ... 21
7.3.1 Warnings ... 21
7.3.2 Message ... 22

8 Features ... 22
8.1 Door rack ... 22
8.2 Shelves ... 23
8.3 Dividing shelf ... 23
8.4 VarioSafe ... 24
8.5 Drawers ... 26
8.6 EasyFresh-Safe cover ... 26
8.7 Adjusting the moisture levels ... 27
8.8 Glass shelves ... 27
8.9 EasyTwist-Ice* ... 27
8.10 IceMaker* ... 28
8.11 VarioSpace ... 29
8.12 Butter dish ... 29
8.13 Egg rack ... 29
8.14 Bottle holder ... 30
8.15 Freezer pack ... 30
8.16 Ice cube tray with cover* ... 30
8.17 Flexible ice compartment divider* ... 30

9 Maintenance ... 31
9.1 FreshAir carbon filter ... 31
9.2 Disassembling / assembling pull-out systems ... 31
9.3 Defrosting the appliance ... 31
9.4 Cleaning the appliance ... 32

10 Customer help ... 35
10.1 Technical specifications ... 35
10.2 Operating noises ... 35
10.3 Technical fault ... 35
10.4 Customer Service ... 36
10.5 Model plate ... 37

11 Shutting down ... 37

12 Disposal ... 37
12.1 Preparing appliance for disposal ... 37
12.2 Disposing of the appliance in an environmentally friendly manner ... 37

The manufacturer is continually working on the further development of all types and models. Please be aware that

*** Depending on model and options**

we reserve the right to make changes to the shape, equipment and technology.

Symbol	Explanation
	Read instructions Please read the information in these instructions carefully to understand all of the benefits of your new appliance.
	Full instructions on the internet You can find detailed instructions on the internet using the QR code on the front of these instruction or by entering the service number at **home.liebherr.com/fridge-manuals**. The service number can be found on the serial tag: 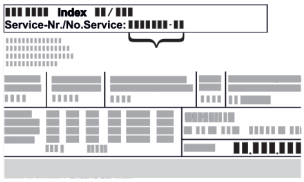 *Fig.* Example illustration
	Check appliance Check all parts for transport damage. If you have any complaints, please contact your agent or customer service.
	Differences These instructions apply to a range of models, so differences are possible. Sections that apply to certain models only are marked with an asterisk (*).
	Instructions and results Instructions are marked with a ▶. Results are marked with a ▷.
	Videos Videos about the appliances are available on the YouTube channels of Liebherr-Hausgeräte.

These operating instructions apply to:

CN ...	52.. / 57.. / 77.. (i)
SCN ...	52..

Note
If your appliance has an N in its appliance designation, it is a NoFrost appliance.

1 Appliance at a glance

1.1 Scope of delivery

Check all parts for transport damage. Contact your dealer or customer service in the event of complaints. (see 10.4 Customer Service)

Your new appliance comes with the following parts:
- Standalone appliance
- Features (depending on the model)
- Installation materials (depending on the model)
- “Quick Start Guide”
- “Installation Guide”

1.2 Overview of the appliance and equipment

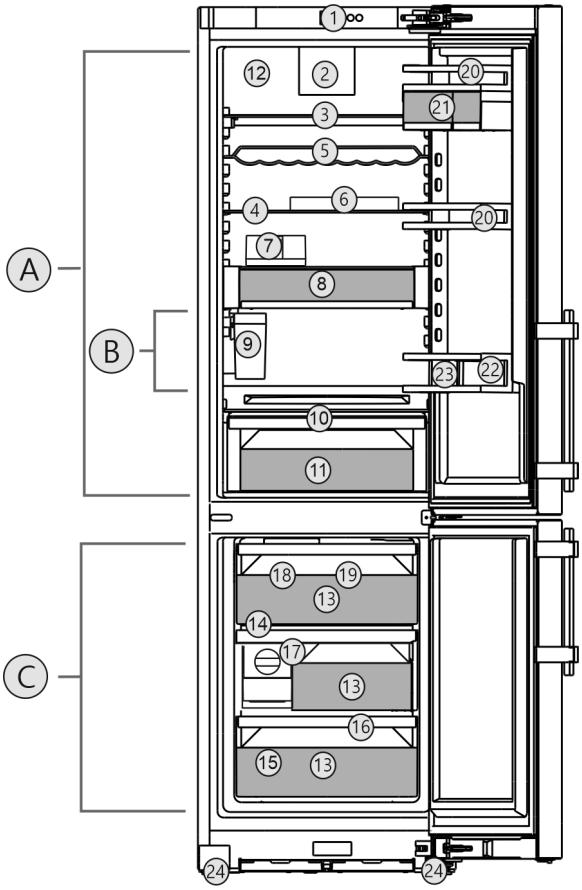

Fig. 1 Example illustration

Temperature range

(A) Fridge compartment
(B) Coldest zone
(C) Freezer compartment

Equipment

(1) Controls
(2) Fan with FreshAir activated charcoal filter
(3) Separable storage shelf
(4) Storage shelf*
(5) Bottle shelf
(6) Egg tray
(7) Butter dish
(8) VarioSafe
(9) IceMaker water tank*
(10) Lid for EasyFresh-Safe
(11) EasyFresh-Safe
(12) Dry rear wall
(13) Freezer compartment
(14) VarioSpace
(15) Serial tag
(16) Outlet
(17) EasyTwist-Ice*
(18) IceMaker*
(19) Cold storage accumulators
(20) Door shelf
(21) VarioBox
(22) Bottle rack
(23) Bottle holder
(24) Adjustable feet and the front, transport castors at the rear, carrying handle at the top (rear) and at the bottom (front)

Note
▶ Shelves, drawers and baskets are arranged for optimum energy efficiency when the appliance is delivered. Changing how the shelves, for example, are inserted in the fridge compartment does not have any impact on energy consumption.

1.3 SmartDevice

SmartDevice is the networking solution for your fridge-freezer.

If your appliance SmartDevice-enabled or compatible, you can quickly and easily connect your appliance to your WiFi. With the SmartDevice app, you can operate your appliance from a mobile device. Additional functions and setting options are available in the SmartDevice SmartDevice app.

SmartDevice-compatible appliance:	Your appliance is compatible for use with the SmartDeviceBox. You must first purchase and install the SmartDeviceBox. In order to connect your appliance to the WiFi, you need to download the SmartDevice app.
More information about SmartDevice:	**smartdevice.liebherr.com**
Purchasing the SmartDeviceBox in the Liebherr-Hausgeräte store:	**home.liebherr.com/shop/de/deu/smartdevicebox.html**
Downloading the SmartDevice app:	After installing and configuring the SmartDevice, you can connect your appliance to the WiFi using the SmartDevice app and the WiFi appliance function (see WiFi) .

Note
The SmartDevice function is not available in the following countries: Russia, Belarus, Kazakhstan.

You cannot use the SmartDeviceBox.

1.4 Appliance range of use

Intended use

The appliance is only suitable for cooling food products in a domestic or household-like environment. This includes, for example, use:

- in staff kitchens, bed and breakfast establishments,
- by guests in country houses, hotels, motels and other accommodation,
- for catering and similar services in the wholesale trade.

The appliance is not suitable as a built-in unit.

All other types of use are not permitted.

Foreseeable misuse

The following applications are expressly forbidden:

- Storing and refrigerating medicines, blood plasma, laboratory preparations or similar substances and products based on the Medical Device Directive 2007/47/EC
- Use in areas at risk of explosions

Misusing the appliance may lead to damage to the goods stored or they may spoil.

Climate classifications

Depending on the climate classification the appliance is designed to operate in restricted ambient temperatures. The climate classification applying to your appliance is printed on the rating plate.

Note
▶ Keep to the specified ambient temperatures in order to guarantee that the appliance works properly.

Climate classification	for ambient temperatures of
SN	10 °C to 32 °C
N	16 °C to 32 °C
ST	16 °C to 38 °C
T	16 °C to 43 °C
SN-ST	10 °C to 38 °C
SN-T	10 °C to 43 °C

1.5 Conformity

The refrigerant circuit has been tested for leaks. The appliance complies with the applicable safety regulations and with the corresponding directives.

The full text of the EU Declaration of Conformity is available on the following website: www.Liebherr.com

2 General safety instructions

Please keep these instructions in a safe place and pass them on to any subsequent owners.

Read these operating instructions carefully before use to ensure safe and correct use of the appliance. Follow the instructions, safety instructions and warning messages included at all times. They are important for ensuring you can operate and install the appliance safely and without any problems.

Danger for the user:

- This device can be used by children and people with impaired physical, sensory or mental abilities or with a lack of experience and knowledge provided that they are supervised or have received instruction in the safe use of this device, and about the resulting hazards. Children must not play with this appliance. Cleaning and user

* Depending on model and options

maintenance work must not be carried out by children without adult supervision. Children aged between 3 and 8 are allowed to load and unload the appliance. Children below the age of 3 must be kept away from the appliance unless they are under continuous adult supervision.
- The socket must be easily accessible so that the appliance can be disconnected quickly from the electricity in an emergency. It must not be located in the area behind the appliance.
- When disconnecting the appliance from the supply, always take hold of the plug. Do not pull the cable.
- In the event of a fault pull out the mains plug or deactivate the fuse.
- Do not damage the mains power cable. Do not operate the appliance with a defective mains power cable.
- If the supply cord is damaged, it must be replaced by a special cord or assembly available from the manufacturer or its service agent.
- Only customer service or other specially trained staff may repair or perform other operations on the appliance.
- Only assemble, connect and dispose of the appliance according to the instructions.
- Special lights, such as LED lights on the appliance, are used to illuminate the interior of the appliance and are not suitable for room lighting.

Fire hazard:

- This appliance contains a refrigerant which is environmentally friendly, but flammable. Leaking refrigerant may ignite. It is hazardous for anyone other than an Authorised Service Person to service this appliance. In Queensland, the authorised Service Person MUST hold a Gas Work Authorisation for hydrocarbon refrigerants, to carry out Servicing or repairs where the gas system is being opened or charged.
- The coolant used (information on the model plate) is ecofriendly but also flammable. Any leaking coolant may ignite.
  - Do not damage the refrigerant circuit pipes.
  - Do not handle ignition sources inside the appliance.
  - Do not use electrical appliances inside the appliance (e.g. steam cleaners, heaters, ice cream makers, etc.).
  - If the refrigerant leaks: remove any naked flames or ignition sources from the vicinity of the leakage point. Properly air the room. Inform customer services.
- Do not store explosives or sprays using combustible propellants such as butane, propane, pentane, etc. in the appliance. To identify these spray cans, look for the list of contents printed on the can, or a flame symbol. Gases possibly escaping may ignite due to electrical components.
- Keep burning candles, lamps and other items with naked flames away from the appliance so that they do not set the appliance on fire.
- **WARNING:** Keep ventilation openings, in the appliance enclosure or in the built-in structure, clear of obstruction.
- **WARNING:** Do not use mechanical devices or other means to accelerate the defrosting process, other than those recommended by the manufacturer.
- **WARNING:** Do not damage the refrigerant circuit.
- Please be sure to store alcoholic drinks or other packaging containing alcohol in tightly closed containers. Any alcohol that leaks out may be ignited by electrical components.

Danger of tipping and falling:

- Do not misuse the plinth, drawers, doors etc. as a step or for support. This applies particularly to children.

Danger of food poisoning:

- Do not consume food which has been stored too long.

Danger of frostbite, numbness and pain:

- Avoid prolonged skin contact with cold surfaces or refrigerated/frozen goods or take protective measures, e.g wear gloves.
- Do not consume ice cream, water ice or ice cubes immediately and do not consume them too cold.

Danger of injury and damage:

- Hot steam can lead to injury. Do not use electrical heating or steam cleaning equipment, open flames or defrosting sprays to defrost.
- Do not use sharp implements to remove the ice.

Risk of crushing:

- Do not hold the hinge when opening and closing the door. Fingers may get caught.

Symbols on the appliance:

This symbol may be located on the compressor. It relates to the oil in the compressor and makes reference to the risk that: Swallowing or inhaling can be fatal. This advice is only relevant to recycling. There is no danger in normal operation.

This symbol is located on the compressor and indicates the danger of flammable materials. Do not remove the sticker.

This or a similar sticker may be located on the rear of the appliance. This sticker indicates that there are vacuum insulation panels (VIP) or perlite panels in the door and/or housing. This advice is only relevant to recycling. Do not remove the sticker.

Please note the warning messages and other specific advice in the other chapters:

	DANGER	indicates an immediately hazardous situation which will lead to death or serious injuries if it is not avoided.
	WARNING	indicates a hazardous situation which may lead to death or serious injuries if it is not avoided.
	CAUTION	indicates a hazardous situation which may lead to minor or moderate injuries if it is not avoided.
	NOTICE	indicates a hazardous situation which may lead to damage to property if it is not avoided.
	Note	indicates useful instructions and tips.

3 Functionality of the Touch & Swipe display

You operate your appliance using the Touch & Swipe display. You select appliance functions in the Touch & Swipe display (hereafter referred to as display) by tapping them. If you do not perform any action on the display for 10 seconds, the display either jumps back to the higher-level menu or directly to the status display.

3.1 Navigation and symbol explanation

In the illustrations, different symbols are used to navigate the display. The following table describes these symbols.

Symbol	Description
	Briefly touch the display: Activates/deactivates function. Confirms selection. Opens submenu.
3s	**Touch the display for a specified time (e.g. 3 seconds):** Activates/deactivates function or value.
	Swipe left or right: Navigate in the menu.
Back	**Briefly touch the Back symbol:** Jumps back one menu level.
Back 3s	**Press and hold the Back symbol for 3 seconds:** Jumps back to the status display.
	Arrow with clock: It takes more than 10 seconds for the following message to appear in the display.
2s 5s 10s	**Arrow with a time indication:** It takes the specified amount of time until the following message appears in the display.
	“Open Settings menu” symbol: Navigates to the Settings menu and opens the settings menu. If necessary: Navigate to the desired function in the Settings menu. (see 3.2.1 Opening the Settings menu)
	“Open Advanced menu” symbol: Navigates to the Advanced menu and opens the advanced menu. If necessary: Navigate to the desired function in the Advanced menu. (see 3.2.2 Opening the expanded menu)
No action for 10 seconds	If you do not perform any action on the display for 10 seconds, the display either jumps back to the higher-level menu or directly to the status display.
Open door and close it again.	If you open the door and immediately close it again, the display jumps directly back to the status display.

Note: Illustrations of the display are shown in the English version.

3.2 Menus

The appliance functions are distributed over various menus:

Menu	Description
Main menu	When you switch the appliance on, you are automatically in the main menu. From here you can navigate to the most important appliance functions, to the Settings menu and to the Advanced menu.

Menu	Description
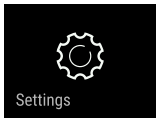 Settings menu	The Settings menu contains additional appliance functions for setting up your appliance.
Advanced menu	The advanced menu contains special appliance functions for setting up your appliance. Access to the Advanced menu is protected by the numerical code **1 5 1**.

3.2.1 Opening the Settings menu

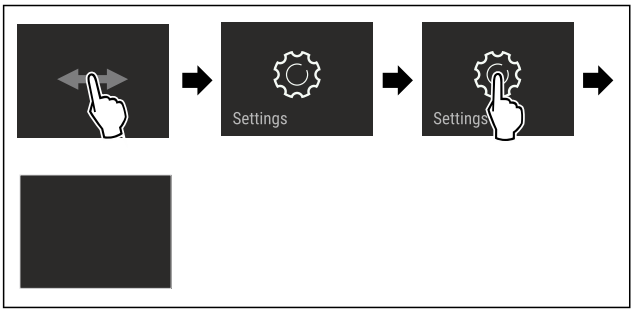

Fig. 2 Example illustration

▶ Carry out action steps according to the illustration.
▷ Settings menu is open.
▶ If necessary: Navigate to the desired function.

3.2.2 Opening the expanded menu

Fig. 3

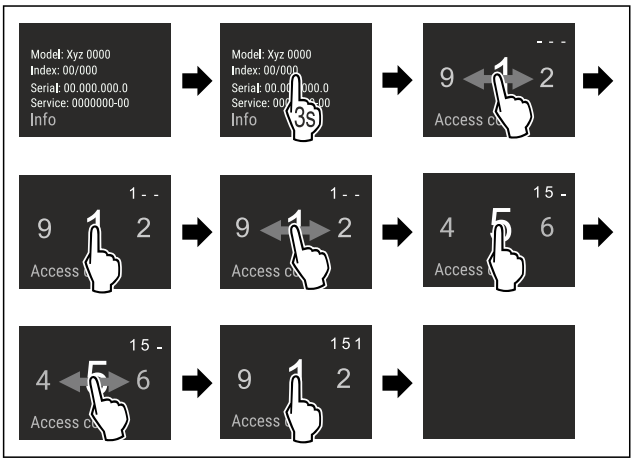

*Fig. 4 Example illustration, access with numerical code **151***

▶ Carry out action steps according to the illustration.
▷ The expanded menu is open.
▶ If necessary: Navigate to the desired function.

3.3 Sleep mode

If you do not touch the display for 1 minute, the display switches to sleep mode. In sleep mode, the display brightness is dimmed.

3.3.1 Ending sleep mode

▶ Touch the display briefly with your finger.
▷ Sleep mode is ended.

4 Putting into operation

4.1 Switching on appliance (first use)

Make sure that the following requirements are fulfilled:

❑ The appliance has been installed and connected in accordance with the installation instructions.
❑ All adhesive strips, adhesive and protective films and transport locks are removed from inside and on the appliance.
❑ All marketing leaflets are removed from the drawers.
❑ You are familiar with the functionality of the Touch & Swipe display. (see 3 Functionality of the Touch & Swipe display)

Switch on the appliance using the Touch & Swipe display:

▶ If the display is in sleep mode: Briefly touch the display.
▶ Carry out action steps according to the illustration.

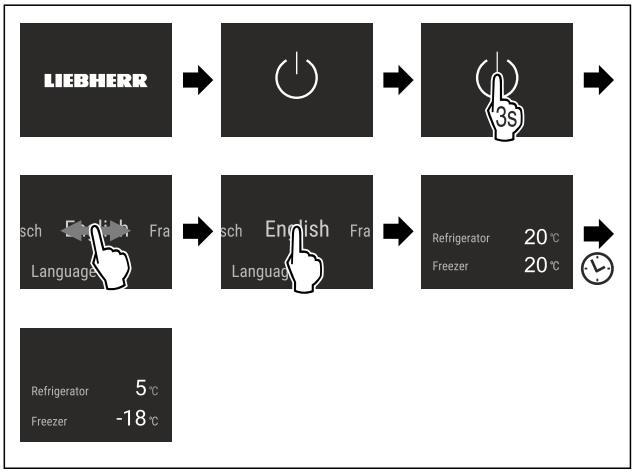

Fig. 5 Example illustration

▷ The status display appears.
▷ The appliance cools to the temperature set at the factory.
▷ The appliance starts in demo mode (status display with DEMO appears): If the appliance starts in demo mode, you can deactivate demo mode within the next 5 minutes. (see Demo mode)

More information:

- Start the IceMaker for the first time. (see 4.2 Starting the IceMaker for the first time*) *
- Start the EasyTwist-Ice for the first time. (see 4.3 Starting the EasyTwist-Ice for the first time*) *
- Start the SmartDevice for the first time. (see 1.3 SmartDevice) and (see WiFi)

Note

The manufacturer recommends:

▶ Stock with food: Wait for around 6 hours until the set temperature is reached.
▶ **Store frozen foods** at -18 °C or colder.
▶ Observe the notes on storing food. (see 5.1 Information regarding storage)

Note

Accessories can be purchased from the Liebherr-Hausgeräte store at home.liebherr.com/shop/de/deu/zubehor.html.

4.2 Starting the IceMaker for the first time*

If your appliance is equipped with IceMaker, you must clean the IceMaker **before using it for the first time**.

Make sure that the following requirements are fulfilled:

❑ The appliance is properly connected.

4.3 Starting the EasyTwist-Ice for the first time*

If your appliance is equipped with EasyTwist-Ice, you must clean the EasyTwist-Ice **before using it for the first time**.

Make sure that the following requirements are fulfilled:

❑ The appliance is properly connected.

▶ Clean the EasyTwist-Ice. (see 9.4.7 Cleaning the Easy-Twist-Ice*)
▶ Fill the water tank.

5 Storage

5.1 Information regarding storage

WARNING

Risk of fire

▶ Do not use any electrical appliances in the food area of the appliance unless recommended by the manufacturer.

Note

The energy consumption increases and the cooling power goes down if ventilation is not sufficient.

▶ Always keep air slots clear.

Observe the following specifications for storage:

- Keep the air vents on the inside of the rear wall free.
- Keep the air vents on the fan free.
- In the freezer compartment: Package food properly.
- Package or cover foods that readily take on or give off odours or taste in closed containers.
- Package raw meat or fish in clean, closed containers. This will prevent meat or fish from touching or dripping onto other food.
- Keep liquids in closed containers.
- Leave space between goods to ensure good air circulation.
- Store food according to the instructions on the packaging.
- Always observe the best-before date indicated on the packaging.

Note

Failure to follow these guidelines can lead to foodstuffs spoiling.

5.2 Fridge compartment

The air circulation in the appliance creates different temperature zones. You will find the different temperature zones in the appliance and equipment overview. (see 1.2 Overview of the appliance and equipment)

5.2.1 Arranging your food properly

▶ Upper area and door: Store butter, cheese, tinned food and tubes.
▶ Coldest temperature zone: Store perishable foods such as pre-cooked meals, meat and lunch meats.
▶ Bottom shelf: Store raw meat or fish.

5.3 EasyFresh

EasyFresh is great for non-packaged foods, such as fruit and vegetables.

The humidity in the compartment depends on the moisture content of the chilled goods placed in it, and also depends on how often the compartment is opened. You can regulate the humidity level. (see 8.7 Adjusting the moisture levels)

5.3.1 Arranging your food properly

▶ Store unpackaged fruit and vegetables.
If the humidity is too high:
▶ Regulate the humidity. (see 8.7 Adjusting the moisture levels)

5.4 Freezer compartment

Here, a dry, frosty storage climate is created at -18 °C. The frosty storage climate is suitable for storing frozen food for several months, for making ice cubes or freezing fresh food.

5.4.1 Freezing food

Freezing quantity

The maximum amount of fresh food that you can freeze within 24 hours is specified on the type plate (see 10.5 Model plate) under “Freezing capacity ... kg/24h”.

To ensure that food quickly freezes through, adhere to the following quantities per package:

- Fruit and vegetables up to 1 kg
- Meat up to 2.5 kg

Freezing food using SuperFrost

Depending on the quantity to be frozen, you can activate SuperFrost before freezing in order to achieve lower freezing temperatures. (see SuperFrost)

▶ Activate SuperFrost if the amount of food you have to freeze is more than approx. 2 kg.

The time at which you activate SuperFrost depends on the amount of food you have to freeze:

Freezing quantity	Time at which you should activate SuperFrost
Small amount of food to freeze	Activate SuperFrost about 6 hours before freezing. You can place the food in the freezer as soon as the appliance automatically deactivates SuperFrost.
Maximum amount of food to freeze	Activate SuperFrost about 24 hours before freezing. You can place the food in the freezer as soon as the appliance automatically deactivates SuperFrost.

Arranging your food properly

CAUTION

Risk of injury from broken glass!

Bottles and cans with beverages can burst during freezing. This applies in particular to carbonated beverages.

▶ Only freeze bottles and cans with beverages if you have activated the BottleTimer function in the SmartDevice app.

* Depending on model and options

Freezing quantity	Arranging your food properly
Small amount of food to freeze	Place packaged food in the top drawer. If possible, place groceries at the back of the drawer near the rear wall.
Maximum amount of food to freeze	Distribute packaged groceries throughout all drawers, but do not place any groceries in the bottom drawer. If possible, place groceries at the back of the drawer near the rear wall.

5.4.2 Defrosting food

WARNING
Risk of food poisoning!
▶ Do not re-freeze thawed food.
▶ Use defrosted foodstuff as soon as possible.

You can defrost food in several ways:
- In the fridge compartment
- In the microwave
- In the oven/fan-assisted oven
- At room temperature

▶ Take out only as much food as necessary.

5.5 Storage times

Refer to the specified storage times as a guide.

In the case of foods with a minimum shelf life, the date indicated on the packaging still applies.

5.5.1 Fridge section

Always follow the best-before date stated on the packaging.

5.5.2 Freezer compartment

Recommended storage period for various types of food		
Ice cream	at -18 °C	2 to 6 months
Sausages, ham	at -18 °C	2 to 3 months
Bread, baked goods	at -18 °C	2 to 6 months
Game, pork	at -18 °C	6 to 9 months
Fatty fish	at -18 °C	2 to 6 months
Lean fish	at -18 °C	6 to 8 months
Cheese	at -18 °C	2 to 6 months
Poultry, beef	at -18 °C	6 to 12 months
Vegetables, fruit	at -18 °C	6 to 12 months

6 Saving energy

- Pay attention to good ventilation. Do not cover ventilation holes or grids.
- Always keep the fan air slits clear.
- Do not install the appliance in direct sunlight, next to an oven, radiator or similar.
- Energy consumption depends on the installation conditions, e.g. the ambient temperature (see 1.4 Appliance range of use) . A warmer ambient temperature can increase the energy consumption.
- Open the appliance for as short a time as possible.
- The lower the temperature is set the higher the energy consumption.
- Sort your food: home.liebherr.com/food.
- Keep all food properly packed and covered. This prevents frost from forming.
- Only take food out for as long as necessary so that it doesn't warm up too much.
- Inserting warm food: allow to cool down to room temperature first.
- Thaw frozen food in the refrigerator.
- For longer periods of absence, use HolidayMode (see HolidayMode) .

Dust deposits increase energy consumption:

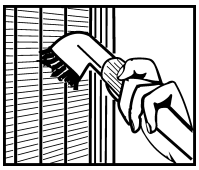

- For refrigerators with heat exchangers dust the metal grid on the back of the appliance once a year.

7 Controls

7.1 Controls and displays

7.1.1 Status display

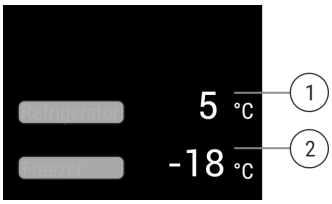

Fig. 6
(1) Temperature display of the fridge section
(2) Freezer compartment temperature display

The Status display shows the set temperatures and is the home display. From there, you can navigate to the options and settings.

7.1.2 Display symbols

Display symbols provide information on the current appliance status:

Symbol	Appliance status
	Standby The appliance or temperature zone is switched off.
	Flashing number Appliance is working. Temperature flashes until the set temperature is reached.
	Flashing symbol Appliance is working. Setting is made.

7.2 Appliance functions

7.2.1 Notes on the appliance functions

The appliance functions are set at the factory so that your appliance is fully functional.

Before you alter, activate or deactivate the device functions, make sure that the following requirements are met:

- ❑ You have read and understood the descriptions of how the display works.
- ❑ You have familiarised yourself with the operating and display elements of your appliance.

Turn off appliance

This setting turns off the whole appliance.

Switching off the entire appliance

Fig. 7

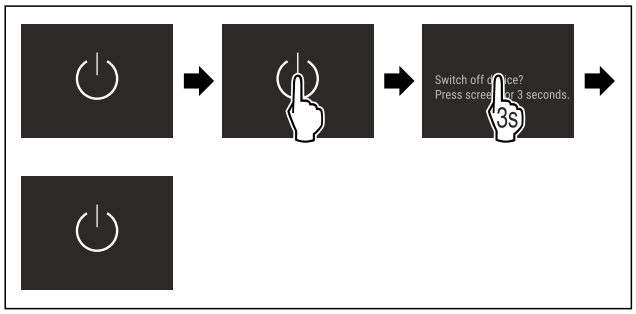

Fig. 8

▶ Turning off the IceMaker .*
▷ Off: Display goes black.

7.2.3 Switching temperature zones off and on

You can switch temperature zones of the appliance off independently.

Application:

- Cleaning
- Defrosting

Switching the fridge compartment off

Make sure that the following requirements are fulfilled:

❑ Refrigerator compartment has been emptied.

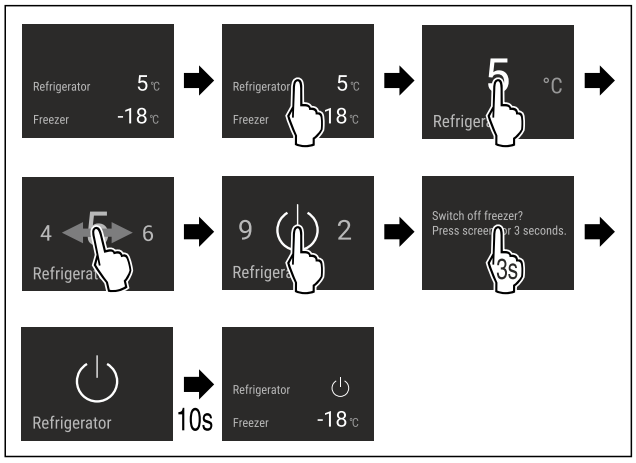

Fig. 9 Example illustration

▶ Carry out action steps according to the illustration.
▷ Refrigerator compartment is switched off.

Switching the freezer compartment off

Make sure that the following requirements are fulfilled:

❑ Freezer compartment has been emptied.
❑ IceMaker is deactivated.*
❑ EasyTwist-Ice water tank is empty.*

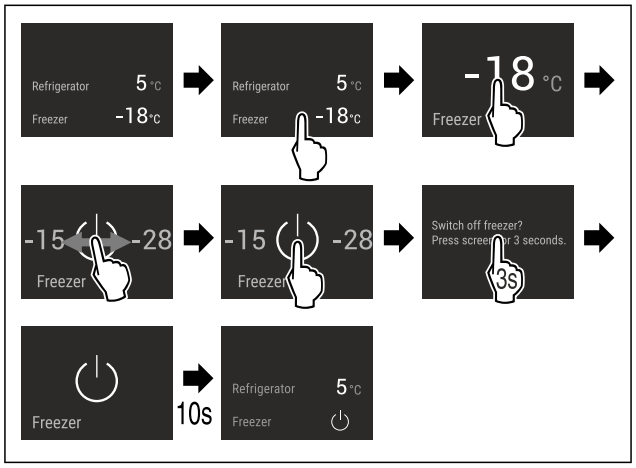

Fig. 10 Example illustration

▶ Carry out action steps according to the illustration.
▷ Freezer compartment is switched off.

Switching the fridge compartment on

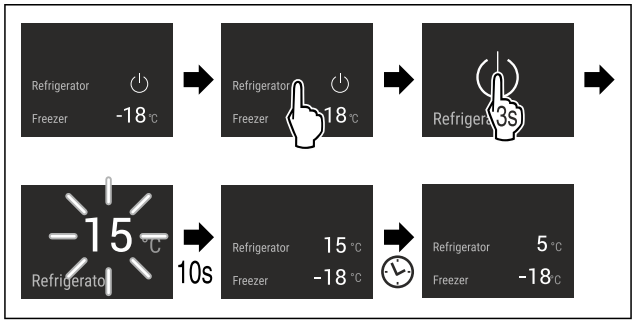

Fig. 11 Example illustration

▶ Carry out action steps according to the illustration.
▷ Refrigerator compartment is switched on.
▷ The appliance cools to the last set temperature.

Switching the freezer compartment on

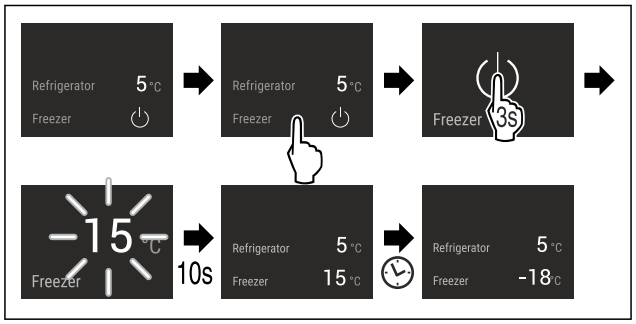

Fig. 12 Example illustration

▶ Carry out action steps according to the illustration.
▷ Freezer compartment is switched on.
▷ The appliance cools to the last set temperature.

WiFi

Use this function to connect your appliance to WiFi. You can then operate it via the SmartDevice app on a mobile device. You can also use this function to disconnect or reset the WiFi connection.

* Depending on model and options

To connect your device to WiFi, you need the SmartDeviceBox.

More information on the SmartDevice: (see 1.3 SmartDevice)

Note
The SmartDevice function is not available in the following countries: Russia, Belarus, Kazakhstan.

You cannot use the SmartDeviceBox.

Establishing the WiFi connection for the first time

Make sure that the following requirements are fulfilled:

- ❑ You have purchased and inserted a SmartDeviceBox. (see 1.3 SmartDevice)
- ❑ You have installed the SmartDevice app (see apps.home.liebherr.com).
- ❑ Registration in the SmartDevice app is completed.

Fig. 13

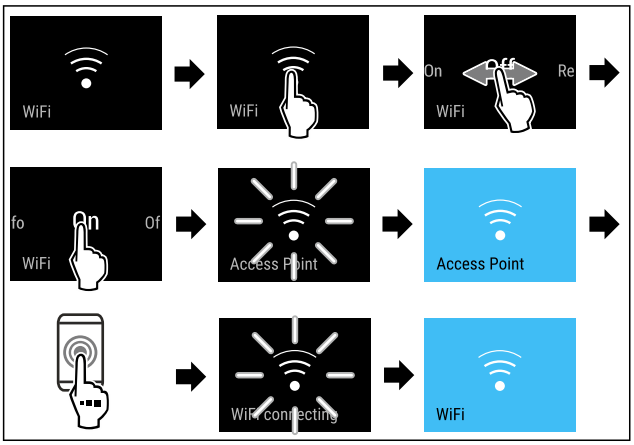

Fig. 14

▶ Carry out action steps according to the illustration.
▷ Connection is established.

Disconnecting from the WiFi

Fig. 15

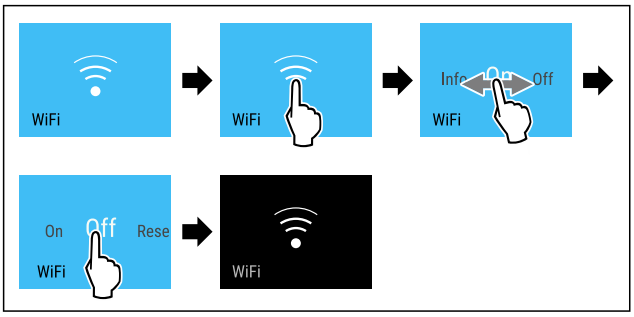

Fig. 16

▶ Carry out action steps according to the illustration.
▷ There is no connection.

Resetting the WiFi connection

Fig. 17

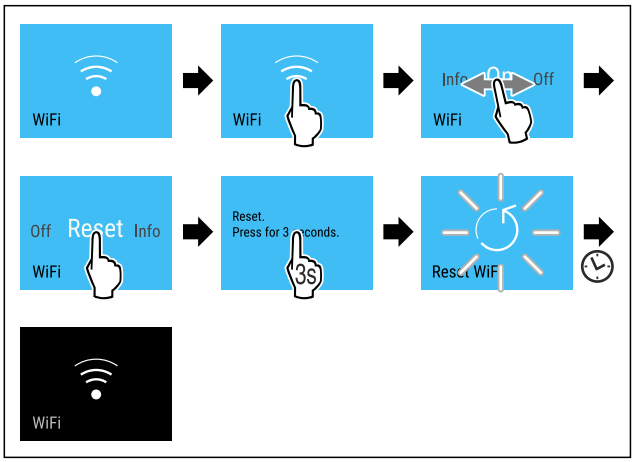

Fig. 18

▶ Carry out action steps according to the illustration.
▷ WiFi connection and other WiFi settings are reset to factory settings.

Showing information about the WiFi connection

Fig. 19

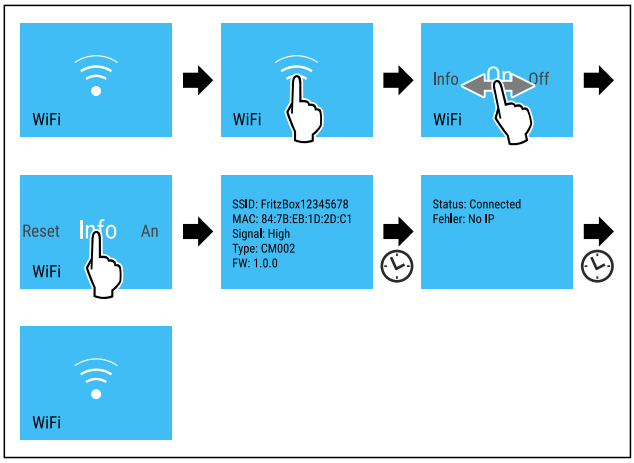

Fig. 20

▶ Carry out action steps according to the illustration.

5 °C Temperature

Use this function to set the temperature.

The temperature depends on the following factors:

- How often the door is opened
- How long the door is open for
- The room temperature of the installation site
- The type, temperature and amount of food

Temperature zone	Recommended setting
5 °C Fridge compartment	5 °C
-18 °C Freezer compartment	-18 °C

Setting the temperature in the fridge compartment

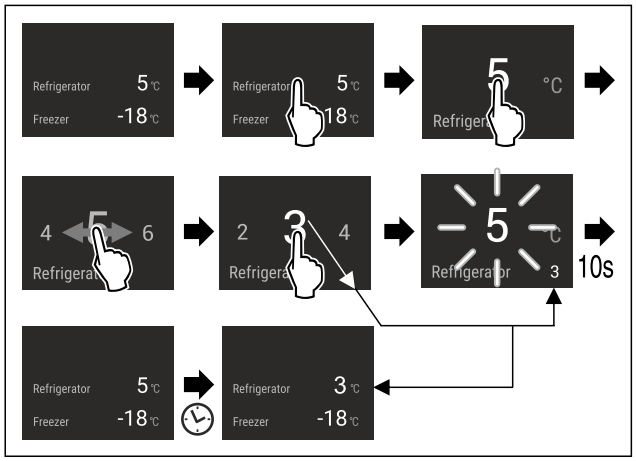

Fig. 21

▶ Carry out action steps according to the illustration.
▷ Temperature is set.

Setting the temperature in the freezer compartment

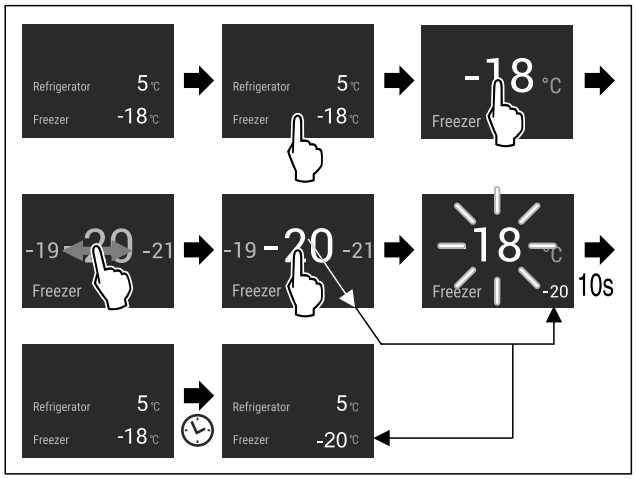

Fig. 22

▶ Carry out action steps according to the illustration.
▷ Temperature is set.

Temperature unit

Use this function to set the temperature unit. You can set degrees Celsius or degrees Fahrenheit as the temperature unit.

Setting the temperature unit

Fig. 23

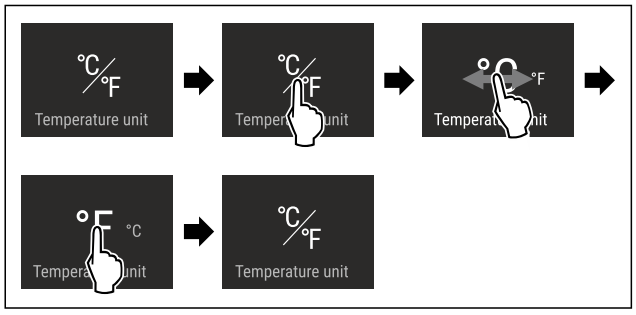

Fig. 24 Example illustration: Switch from degrees Celsius to degrees Fahrenheit.

▶ Carry out action steps according to the illustration.
▷ The temperature unit is set.

D-Value

Use this function to set the D-Value.

The D-Value specifies whether you are operating your fridge section with a dry rear wall or without a dry rear wall. The rear wall is installed in the appliance as delivered. The D-Value is pre-set to D1.

You can remove the rear wall for cleaning. (see 9.4.5 Cleaning the dry rear panel) In order to operate the appliance without a rear wall, you must set the D-Value to D2.

Note
The declared energy consumption was determined without a dry rear wall. The appliance is fully functional with a dry rear wall but its energy consumption will be slightly higher. Liebherr recommends:

▶ Operate the appliance with a dry rear wall in order to prevent visible condensate and the food freezing.

Setting the D-Value

Fig. 25

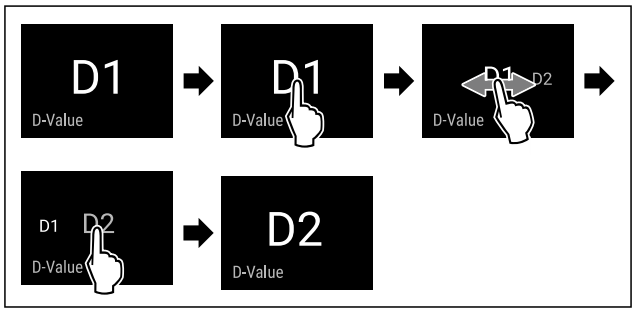

Fig. 26 Example illustration: Switch from D1 to D2.

▶ Carry out action steps according to the illustration.
▷ The D-Value is set.

SuperCool

This function selects the lowest cooling temperature. This gives you colder storage temperatures.

This function is relevant to the fridge section *Fig. 1 (A)*

Use:

- Cool large amounts of food quickly.

Activating/deactivating the function

▶ Using the fridge section: activate the function when you add the goods.
▶ Activating/deactivating.

The function automatically turns off. The appliance goes back to normal mode. The temperature adjusts itself to the set level.

PowerCool

You can use this function to activate or deactivate PowerCool. PowerCool ensures optimised temperature layers for cooling your food.

The function applies to the fridge section.

Application:

- At higher room temperatures (as of approx. 35 °C)
- At high humidity, e.g. on summer days
- When storing moist food, in order to prevent condensate forming in the interior

Note
The fan may also run even if the function is deactivated. It therefore ensures even temperature distribution in the appliance.

If the function is active, the device operates at higher power. As a result, the device's operating noise may be temporarily louder and energy consumption will increase.

Activating PowerCool

Fig. 27

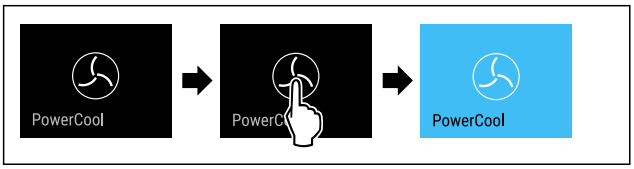

Fig. 28

▶ Carry out action steps according to the illustration.
▷ PowerCool is activated.
▷ The appliance's energy consumption increases slightly.

Deactivating PowerCool

Fig. 29

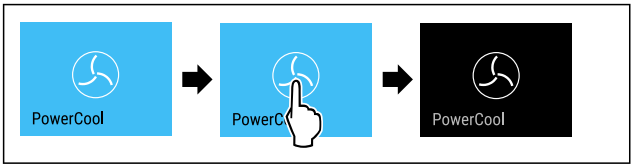

Fig. 30

▶ Carry out action steps according to the illustration.
▷ PowerCool is deactivated.

VarioTemp

This function allows you to use the freezer compartment as an additional cooling zone. You can set the temperature from -2 °C to 14 °C. If you activate this function, it may cause more noise. However, the appliance is still fully functional.

For storage of foodstuff in the freezer compartment with the VarioTemp function activated, Liebherr recommends:

Temperature range	Foodstuff
4 °C to 9 °C	Cooked foods, cheese, preserves
0 °C	Packaged fruit and vegetables
-2 °C	Fresh fish and seafood
10 °C to 14 °C	Cold-sensitive foodstuffs such as sweet potatoes, pumpkin or exotic fruits, food or drinks that should not be eaten too cold

Activating VarioTemp

Make sure that the following requirements are fulfilled:*

❑ The IceMaker has been cleaned. (see 9.4.7 Cleaning the EasyTwist-Ice*) *
❑ The EasyTwist-Ice has been cleaned. (see 9.4.7 Cleaning the EasyTwist-Ice*) *

WARNING
Risk of food poisoning!
▶ Do not re-freeze thawed food.
▶ Use defrosted foodstuff as soon as possible.

Fig. 31

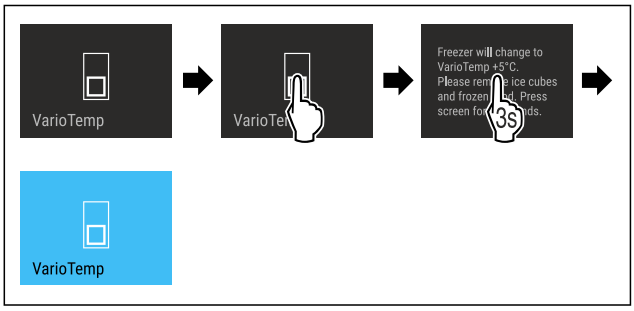

Fig. 32

▶ Carry out steps according to the illustration.
▷ VarioTemp is activated.
▷ VarioTemp is set to the preselected value.
▷ The status display does not show the preset temperature until it is reached.

Adjusting VarioTemp

Make sure that the following requirements are fulfilled:

❑ The VarioTemp is activated. (see Activating VarioTemp)

WARNING
Risk of food poisoning!
▶ Do not re-freeze thawed food.
▶ Use defrosted foodstuff as soon as possible.

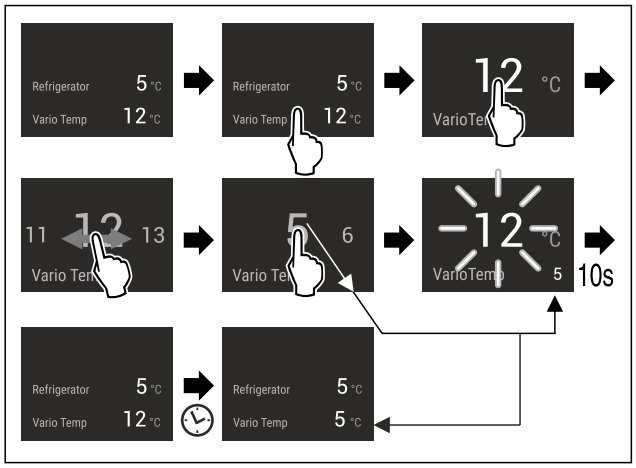

Fig. 33 Example illustration: Change VarioTemp from 12 °C to 5 °C for a fridge-freezer combination with EasyFresh.

▶ Carry out steps according to the illustration.
▷ VarioTemp is adjusted.
▷ The status display does not show the new set temperature until it is reached.

Deactivating VarioTemp

Fig. 34

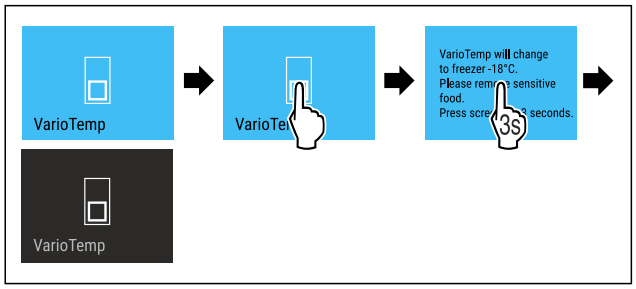

Fig. 35

▶ Carry out steps according to the illustration.
▷ VarioTemp is deactivated.
▷ The freezer compartment is cooled to the preset temperature.

SuperFrost

This function selects the lowest freezing temperature. This gives you colder storage temperatures.

This function refers to the freezer section *Fig. 1 (C)*.

Use:

- For storing more than 2 kg fresh food every day.
- Freezing fresh food quickly to the core.
- Increasing the cold reserves in the stored goods before defrosting the appliance.

Activating/deactivating the function

With a small amount to freeze:
▶ Activate 6 hours before use.
With a maximum amount to freeze:
▶ Activate 24 hours before use.
▶ Activating/deactivating.

The function automatically turns off. The appliance goes back to normal mode. The temperature adjusts itself to the set level.

Start defrosting cycle

Use this function to start the automatic defrosting cycle manually if it does not start automatically in the event of a fault.

Starting defrosting cycle

Fig. 36

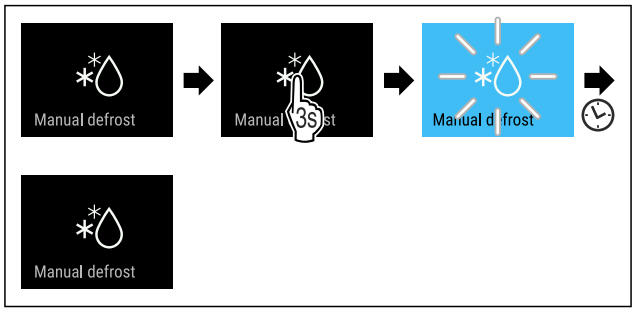

Fig. 37

▶ Carry out action steps according to the illustration.
▷ Defrosting cycle has started: Icon flashes until defrosting cycle is automatically completed.
▷ When defrosting cycle is finished: The device continues to run in normal mode.

Cancelling defrosting cycle

The defrosting cycle will be stopped automatically. However, you can also cancel the defrosting cycle at any time during the defrosting process:

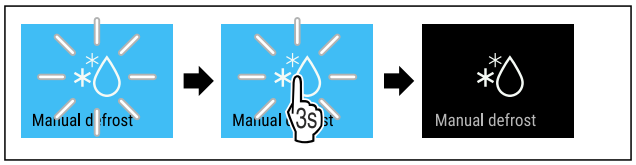

Fig. 38

▶ Carry out action steps according to the illustration.
▷ Defrosting cycle is cancelled.
▷ The device continues to run in normal mode.

PartyMode

You can use this function to activate or deactivate PartyMode. PartyMode activates various functions that are useful for a party.

PartyMode activates the following functions:

- SuperCool (see SuperCool)
- SuperFrost (see SuperFrost)
- IceMaker with MaxIce (see IceMaker / MaxIce *) *

You can adjust all listed functions individually and flexibly. When you deactivate PartyMode, all changes are discarded.

If the function is active, the device operates at higher power. As a result, the device's operating noise may be temporarily louder and energy consumption will increase.

Activating PartyMode

Make sure that the following requirements are fulfilled:*

❑ The IceMaker has been started. (see 4.2 Starting the IceMaker for the first time*)

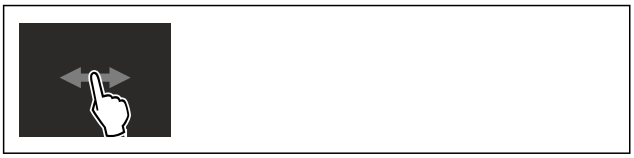

Fig. 39

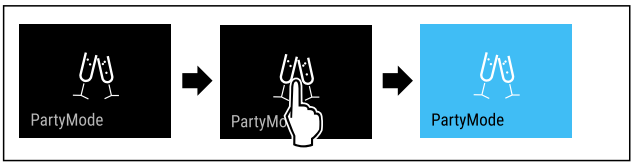

Fig. 40

▶ Carry out action steps according to the illustration.
▷ PartyMode and the associated functions are activated.
▷ The temperature display turns blue.
▷ The current temperature flashes until the target temperature is reached.

Deactivating PartyMode

The PartyMode is automatically deactivated after 24 seconds. However, you can also deactivate PartyMode manually at any time:

Fig. 41

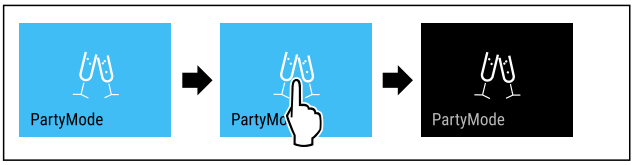

Fig. 42

▶ Carry out action steps according to the illustration.
▷ PartyMode is deactivated.
▷ The appliance cools to the temperature set previously: The current temperature flashes until the target temperature is reached.

HolidayMode

This function minimises the energy consumption during an extended absence. The temperature of the refrigerator compartment is set to 15 °C and this is displayed on the status screen when the temperature has been reached.

The set freezer temperature remains unchanged.

This function refers to the fridge section *Fig. 1 (A)*.

Use:

- Save energy if you plan to be away for a while.
- Avoid coming home to bad smells and mould.

Activating/deactivating the function

▶ Empty everything from the fridge section.
▶ Activating/deactivating .
▷ On: Fridge temperature is raised.
▷ Off: the previously set temperature is restored.

SabbathMode

You can use this function to activate or deactivate SabbathMode. If you activate this function, some electronic functions are switched off. As a result, your device meets the religious requirements for Jewish holidays such as Sabbath and complies with STAR-K Kosher certification.

Device status when SabbathMode is active
The status display shows SabbathMode permanently.
All functions on the display are locked except for the **Deactivate SabbathMode function**.
Active functions remain active.
The display remains bright when you close the door.
The interior lighting is deactivated.
Reminders are not implemented. The set time interval stops.
Reminders and warnings are not displayed.
There is no door alarm.
There is no temperature alarm.
The IceMaker is switched off.*
The defrosting cycle operates only for the specified time, without considering the device consumption.
After a power failure, the device returns to SabbathMode.

Device status

Note

This appliance has certification from the “Institute for Science and Halacha”. (www.machonhalacha.co.il)

You can find a list of STAR-K-certified appliances at www.star-k.org/appliances.

Activating SabbathMode

WARNING

Danger of food poisoning from spoiled food!
If you have SabbathMode activated and a power failure occurs, no message appears in the status display about the power failure. Once the power is restored, the appliance continues to operate in SabbathMode. The power failure may mean that food spoils and the consumption of this food could lead to food poisoning.
After a power failure:

▶ Do not consume food that was frozen and has thawed out.

Fig. 43

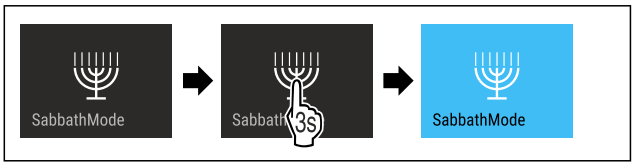

Fig. 44

▶ Carry out action steps according to the illustration.
▷ SabbathMode is activated.
▷ The status display shows SabbathMode permanently.

Deactivating SabbathMode

The SabbathMode is automatically deactivated after 80 hours. However, you can also deactivate SabbathMode manually at any time:

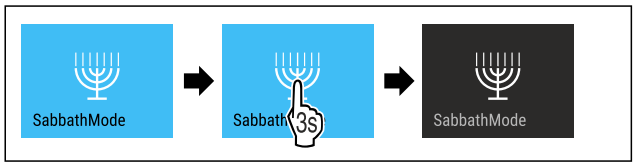

Fig. 45

▶ Carry out action steps according to the illustration.
▷ SabbathMode is deactivated.

EnergySaver

You can use this function to activate or deactivate Energy saving mode. If energy saving mode is activated, the energy consumption decreases and the temperature in the device increases. The food remains fresh, but the shelf life is shortened.

Temperature zone	Recommended setting (see Temperature)	Temperature with active EnergySaver
5 °C Fridge section	5 °C	7 °C
-18 °C Freezer section	-18 °C	-16 °C

Temperatures

Activating EnergySaver

Fig. 46

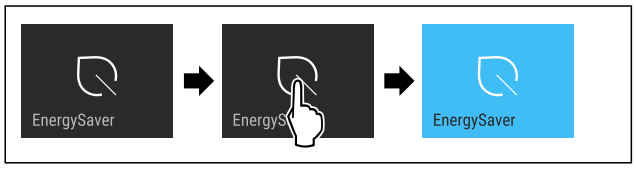

Fig. 47

▶ Carry out action steps according to the illustration.
▷ Energy saving mode is activated.

Deactivating EnergySaver

Fig. 48

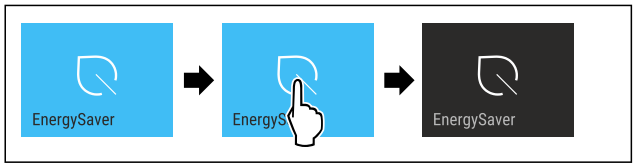

Fig. 49

▶ Carry out action steps according to the illustration.
▷ Energy saving mode is deactivated.

IceMaker / MaxIce *

You can activate or deactivate ice cube production with the IceMaker function. Use the MaxIce function to increase the number of ice cubes in the IceMaker.

More information on the number of ice cubes:	(see 10.1 Technical specifications)
Further information on the IceMaker water supply:	(see IceMaker water supply*)
More information on cleaning the lines of the IceMaker:	(see TubeClean *)

If the function is active, the device operates at higher power. As a result, the device's operating noise may be temporarily louder and energy consumption will increase.

Activating IceMaker

Make sure that the following requirements are fulfilled:

❑ IceMaker is put into operation. (see 8.10 IceMaker*)

Fig. 50

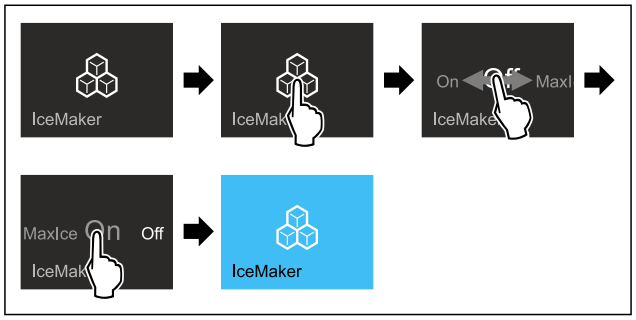

Fig. 51

▶ Carry out action steps according to the illustration.

-or-

▶ Activate with the SmartDevice app.

▷ IceMaker is activated. It can take up to 24 hours for the IceMaker to produce the first ice cubes.

Activating the IceMaker with MaxIce

If you have not activated the IceMaker function before, make sure that the following requirements are met:

❑ IceMaker is put into operation. (see 8.10 IceMaker*)

Fig. 52

*** Depending on model and options**

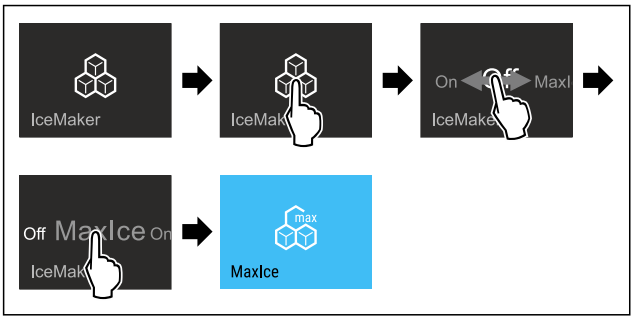

Fig. 53

▶ Carry out action steps according to the illustration.

-or-

▶ Activate with the SmartDevice app.

▷ The IceMaker is activated with MaxIce.

Changing between the IceMaker and MaxIce

If you have activated the IceMaker and would like to change to MaxIce:

Fig. 54

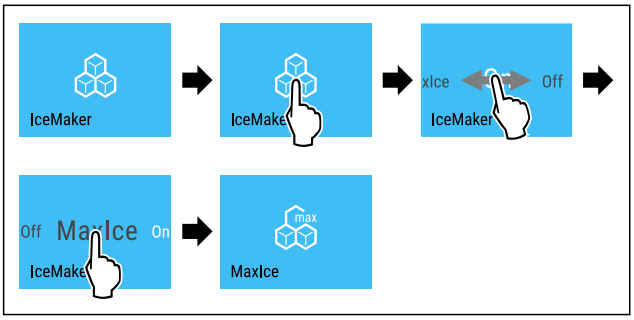

Fig. 55

▶ Carry out action steps according to the illustration.

▷ The IceMaker is activated with MaxIce.

If you have activated MaxIce and would like to change to the IceMaker:

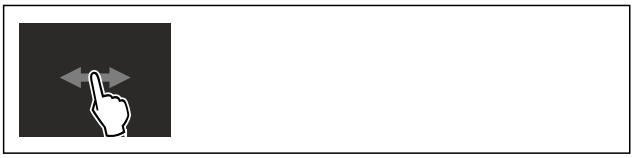

Fig. 56

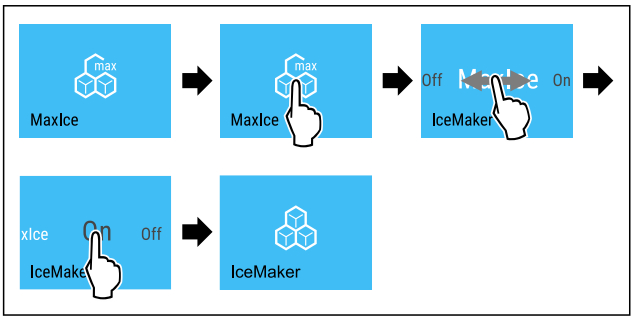

Fig. 57

▶ Carry out action steps according to the illustration.

▷ IceMaker is activated.

▷ MaxIce is deactivated.

Deactivating the IceMaker / MaxIce

Fig. 58

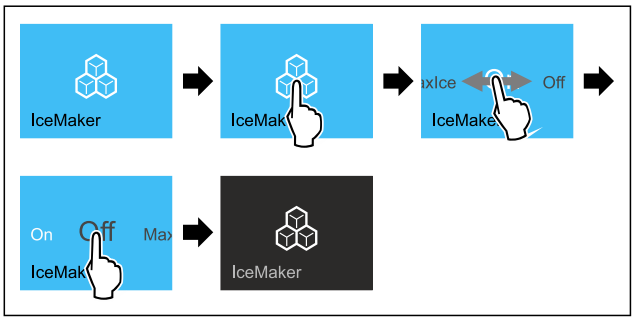

Fig. 59 Example illustration of the active IceMaker function

▶ Carry out action steps according to the illustration.

-or-

▶ Deactivate with the SmartDevice app.

▷ IceMaker and MaxIce are deactivated.

▷ If ice cubes are currently being made, the system completes the process.

▷ The IceMaker goes off automatically.

5 IceMaker water supply*

Use this function to set the IceMaker water supply. The IceMaker water supply regulates the amount of water supplied. The IceMaker water supply can be changed if the water supply does not match the water pressure and the ice cube size dispensed.

The IceMaker water supply is pre-set to value 5 as delivered. A value from 1 (smallest inflow volume) to 8 (largest inflow volume) can be selected.

Setting the IceMaker water supply

Make sure that the following requirements are fulfilled:

❑ The IceMaker has been started. (see 4.2 Starting the IceMaker for the first time*)

❑ IceMaker is activated. (see IceMaker / MaxIce *)

Fig. 60

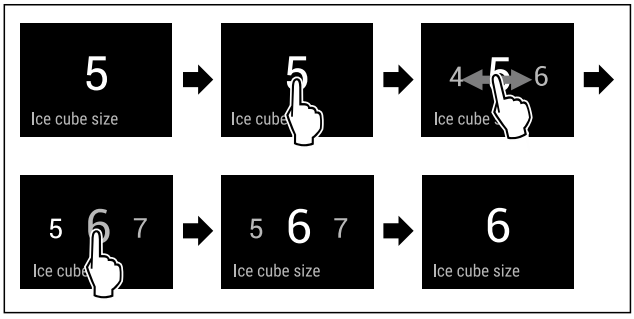

Fig. 61 Example illustration: Switch from value 5 to value 6.

▶ Carry out action steps according to the illustration.

▷ IceMaker water supply is set.

TubeClean *

You can use this function to activate or deactivate TubeClean. If TubeClean is activated, it cleans the IceMaker lines.

Activating TubeClean

Make sure that the following requirements are fulfilled:

- ❑ IceMaker cleaning is prepared. (see 9.4.8 Cleaning the IceMaker*)
- ❑ Empty container with a capacity of 1.5 l and with a maximum height of 10 cm is ready.

▶ Place the container in the drawer under the IceMaker.

Fig. 62

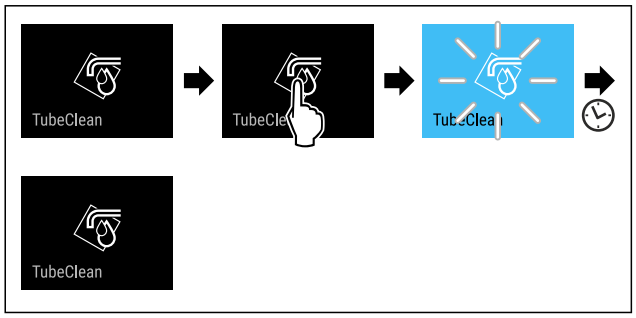

Fig. 63

▶ Carry out action steps according to the illustration.
▷ TubeClean is activated.
▷ The cleaning process has started: Icon flashes until the cleaning process is automatically completed after 60 minutes.
▷ When the cleaning process is complete: The device continues to run in normal mode.

Deactivating TubeClean

TubeClean is automatically ended after 60 minutes. However, TubeClean can also be deactivated at any time during the cleaning process:

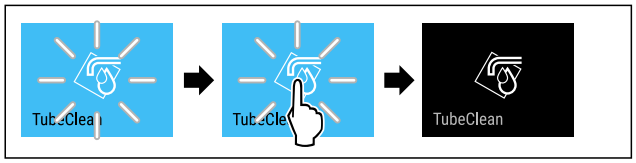

Fig. 64

▶ Carry out action steps according to the illustration.
▷ TubeClean is deactivated: Cleaning process is aborted.
▷ The device continues to run in normal mode.

CleaningMode

You can use this function to activate or deactivate CleaningMode. CleaningMode enables the appliance to be cleaned conveniently.

This setting applies to the fridge section.

Application:

- Clean the fridge section. (see 9.4 Cleaning the appliance)

Device status when CleaningMode is active
The status display shows CleaningMode permanently.
The fridge section is switched off.

Device status when CleaningMode is active
Interior lighting is activated.
The reminders and warnings are not displayed. No signal tone sounds.

Device status

Activating CleaningMode

Fig. 65

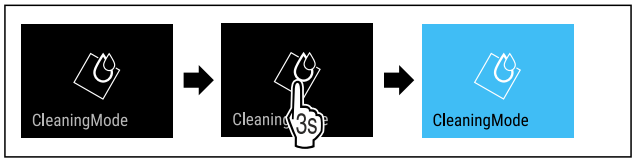

Fig. 66

▶ Carry out action steps according to the illustration.
▷ CleaningMode is activated.
▷ The status display shows CleaningMode permanently.

Deactivating CleaningMode

CleaningMode is deactivated automatically after 60 minutes. However, you can also deactivate CleaningMode manually at any time:

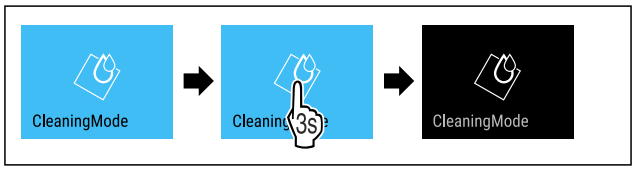

Fig. 67

▶ Carry out action steps according to the illustration.
▷ CleaningMode is deactivated.
▷ The appliance cools to the temperature set previously.

Display brightness

Use this function to set the display brightness in stages.

You can select the following brightness levels:

- 40 %
- 60 %
- 80 %
- 100 % (pre-setting)

Setting the display brightness

Fig. 68

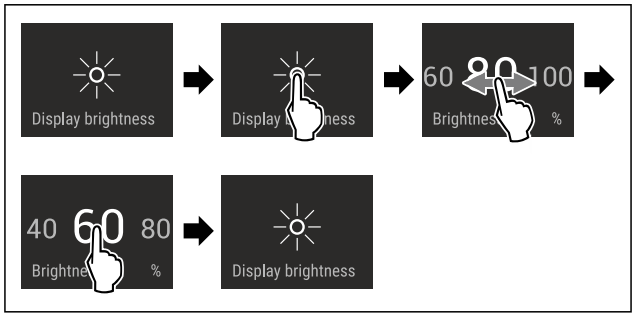

* Depending on model and options

Fig. 69 Example illustration: Switch from 80 % to 60 %.

▶ Carry out action steps according to the illustration.
▷ The display brightness is set.

Door alarm

Use this function to activate or deactivate the door alarm. The door alarm sounds if the door is open for too long. The door alarm is activated on delivery. You can set how long the door may be open before the door alarm sounds.

The following values can be set:

- 1 minute
- 2 minutes
- 3 minutes
- Off

Setting the door alarm

Fig. 70

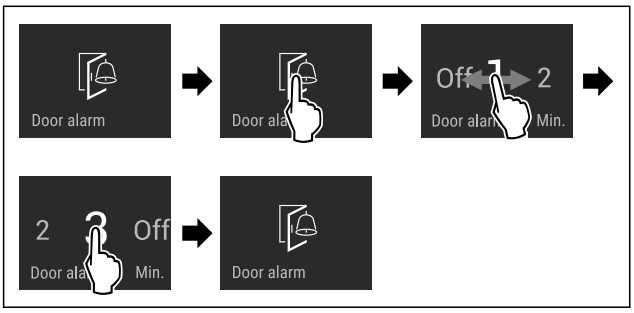

Fig. 71 Example illustration: Change door alarm from 1 minute to 3 minutes.

▶ Carry out action steps according to the illustration.
▷ The door alarm is set.

Deactivating the door alarm

Fig. 73

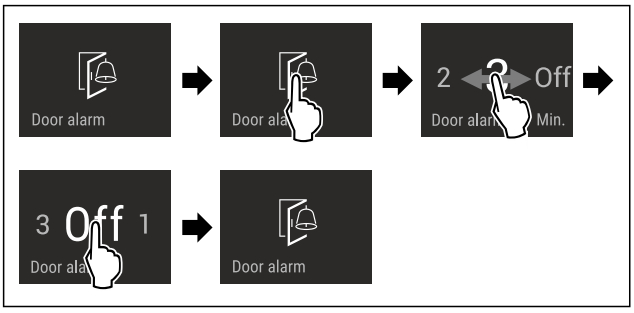

Fig. 74

▶ Carry out action steps according to the illustration.
▷ The door alarm is deactivated.

Input lock

You can use this function to activate or deactivate the input lock. The input lock prevents the appliance being operated accidentally, e.g. by children.

Application:

- Avoid unintentional modification of functions.
- Avoid unintentional switching off of the device.
- Avoid unintentional temperature setting.

Activating the input lock

If you activate the input lock, you can continue to navigate in the menus but you cannot select or change other functions.

Fig. 75

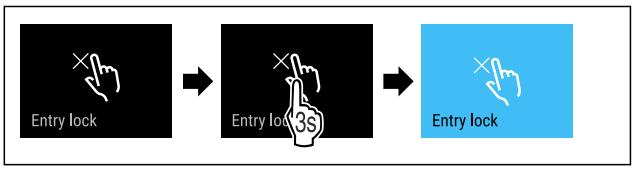

Fig. 76

▶ Carry out action steps according to the illustration.
▷ Input lock is activated.

Deactivating the input lock

Fig. 77

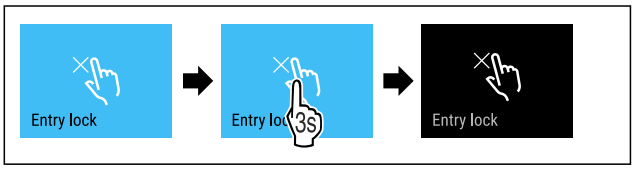

Fig. 78

▶ Carry out action steps according to the illustration.
▷ Input lock is deactivated.

Language

Use this function to set the display language.

You can select the following languages:

- Deutsch
- English
- Français
- Español
- Italiano
- Nederlands
- Čeština
- Polski
- Português
- Русский
- 温度单位

Setting the language

Fig. 79

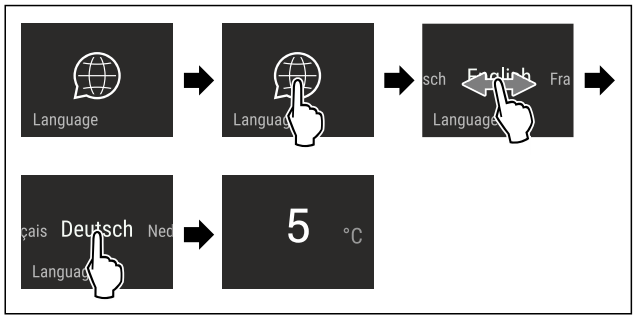

Fig. 80 Example illustration depending on the language and temperature

▶ Carry out action steps according to the illustration.
▷ The language is set.
▷ The display returns to the status display.

Device information

Use this function to indicate the model name, index, serial number and service number of your device. You will need the device information when you contact customer service. (see 10.4 Customer Service)

This function also opens the Advanced menu. (see 3 Functionality of the Touch & Swipe display)

Indicating the device information

Fig. 81

Fig. 82

▶ Carry out action steps according to the illustration.
▷ Display indicates device information.

Software

Use this function to indicate the software version of your device.

Indicating the software version

Fig. 83

Fig. 84

▶ Carry out action steps according to the illustration.
▷ Display indicates software version.

Reminder

Reminders are given out acoustically by a beep and visually by a symbol in the display. The signal gets louder until the alert stops.

Replace FreshAir active carbon filter

This message appears when the air filter needs replacing.

▶ Change the air filter every six months.
▶ Confirm the message with OK.
▷ The service interval resets.
▷ The air filter guarantees the air quality in the fridge.

Activating the setting

▶ Activating/deactivating .

Demo mode

Demo mode is a special feature for dealers who want to demonstrate appliance features. If you activate demo mode, all refrigeration functions are deactivated.

If you switch on your appliance and “Demo” appears in the status display, then demo mode is already activated.

If you activate and then deactivate demo mode, the appliance will be reset to factory defaults. (see Resetting to factory settings)

Activating demo mode

Fig. 85

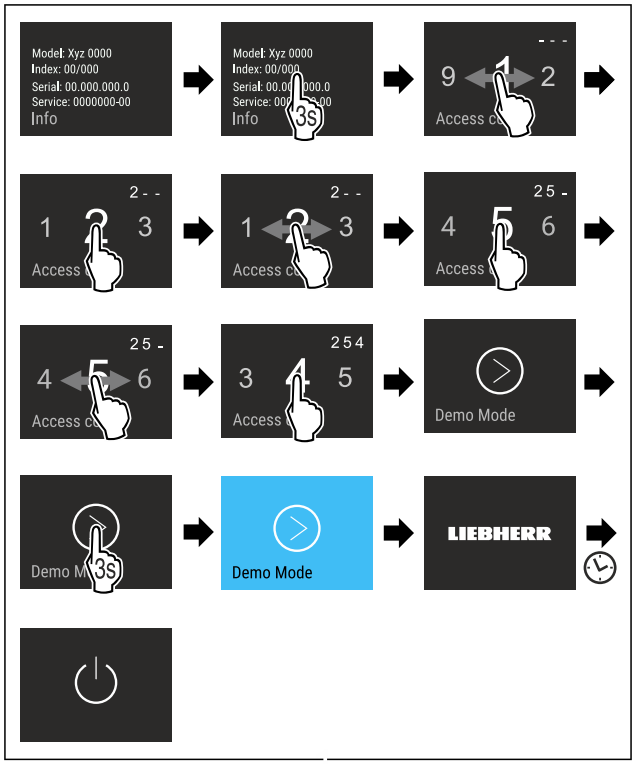

Fig. 86

▶ Carry out action steps according to the illustration.
▷ Demo mode is activated.
▷ Appliance is switched off.
▶ Switch on the appliance. (see 4.1 Switching on appliance (first use))

▷ “DEMO” appears in the status display.

Deactivating demo mode

Fig. 87

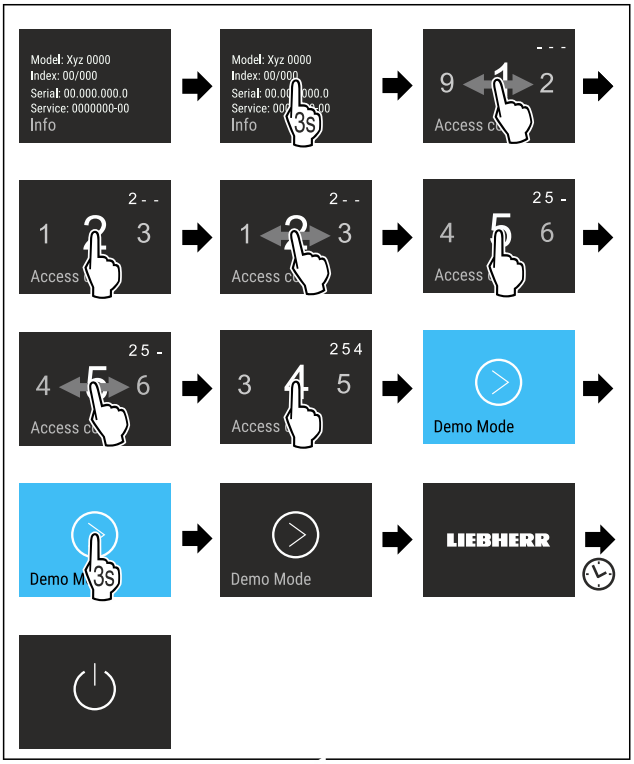

Fig. 88

▶ Carry out action steps according to the illustration.
▷ Demo mode is deactivated.
▷ Appliance is switched off.
▶ Switch on the appliance. (see 4.1 Switching on appliance (first use))
▷ Appliance is reset to factory settings.

Resetting to factory settings

Use this function to reset all settings to factory defaults. All settings you have made so far are reset to their original settings.

Performing a reset

Fig. 89

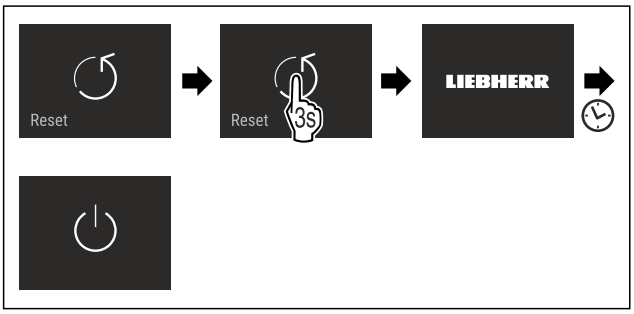

Fig. 90

▶ Carry out action steps according to the illustration.
▷ Device is reset.
▷ Device is switched off.

Note
To reset to factory settings in battery mode: Restart is only possible with mains voltage.

▶ Restart the device. (see 4.1 Switching on appliance (first use))

7.3 Fault messages

Fault messages appear in the display. There are two categories of fault message:

Category	Meaning
Message	Reminder of general procedures. You can carry out these procedures to eliminate the message.
Warning	Appears when there are malfunctions. A signal sounds in addition to the display. The signal becomes louder until you acknowledge by tapping the display. You can eliminate simple defects yourself. For more serious defects, you must contact customer service.

7.3.1 Warnings

Close the door

This message appears if the door is open for too long.

You can set how long it takes for this message to appear .

▶ Stop alarm: Confirm the message.

-or-

▶ Close the door.

Power cut

This message appears if the freezer temperature increased due to a power cut. After the power is restored, the appliance continues to work at the set temperature.

▶ Stop alarm: Confirm the message.
▷ Temperature alert appears (see Temperature alarm) .

Temperature alarm

This message appears if the freezer temperature does not match the set temperature.

Variations in temperature could be because:

- Hot, fresh food was inserted.
- Too much warm room air flowed in when rearranging and removing food.
- The power was cut off for a while.
- The appliance is faulty.

When the fault is eliminated the appliance continues to work at the set temperature.

▶ Confirm the display.
▷ The highest temperature is shown.
▶ Confirm display again.
▷ The status display is displayed.
▷ The current temperature is shown.

Error

This message appears if there is a fault with the appliance. An appliance component indicates a fault.

▶ Open the door.
▶ Note down the fault code.

▶ Confirm the message.
▷ The signal tone stops.
▷ The status display appears.
▶ Close the door.
▶ Contact customer service. (see 10.4 Customer Service)

7.3.2 Message

Insert IceMaker drawer*

This message appears if the IceMaker drawer is open.
▶ Push in the IceMaker drawer.
▷ The message disappears.
▷ The IceMaker produces ice cubes.

8 Features

8.1 Door rack

8.1.1 Move/remove the door rack

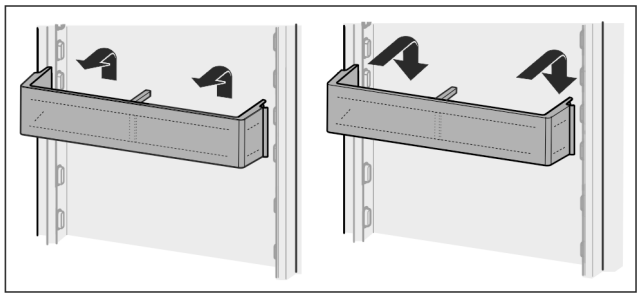

Fig. 91
▶ Slide the rack upwards.
▶ Pull forwards.
▶ Re-insert it in reverse order.

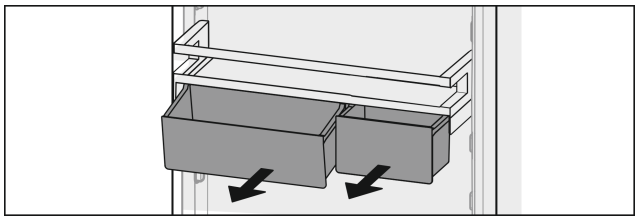

Fig. 92

You can use just one or both VarioBoxes. To store oversized bottles, just suspend one box over the bottle rack.

Move the VarioBox shelf:

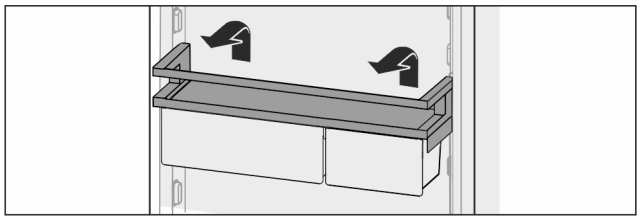

Fig. 93
▶ Pull it up and out.
▶ Put it back in at any position.

Moving the VarioBoxes:

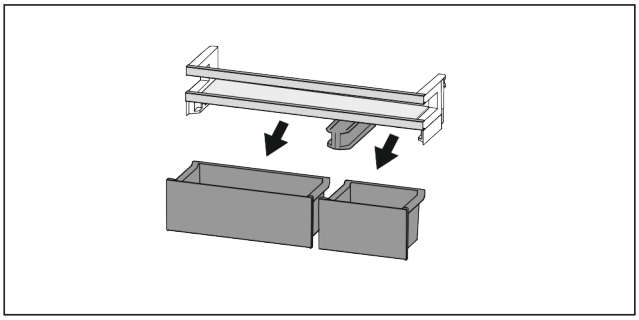

Fig. 94
If the door rack is removed:
▶ Remove containers.

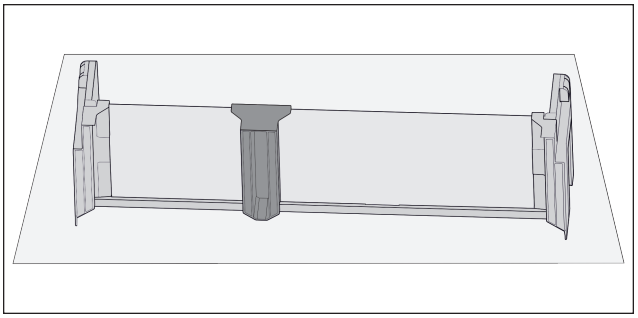

Fig. 95
▶ Place the shelf on the table.

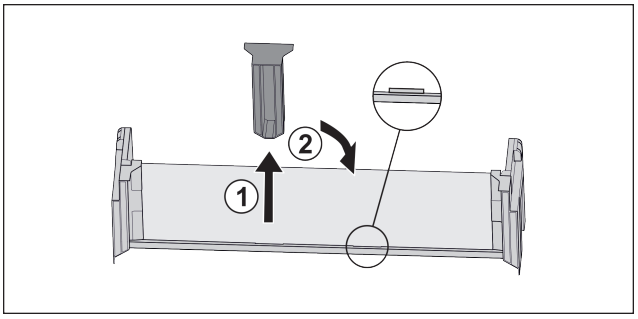

Fig. 96
▶ Pull off the middle holder *Fig. 96 (1)*.
▶ Insert the middle holder in the second position *Fig. 96 (2)*.

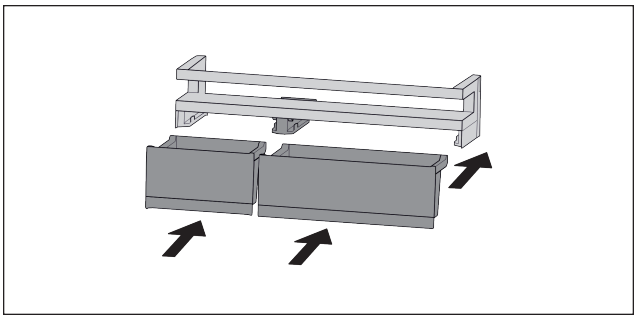

Fig. 97
▶ Replace containers.

8.1.2 Disassembling the door rack

The door rack can be taken apart for cleaning.

* Depending on model and options

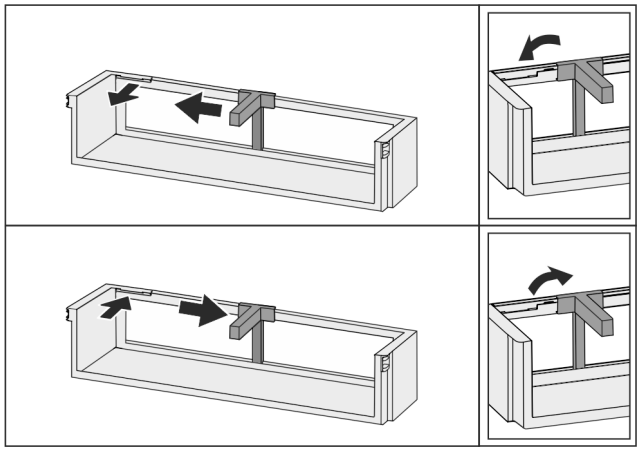

Fig. 98

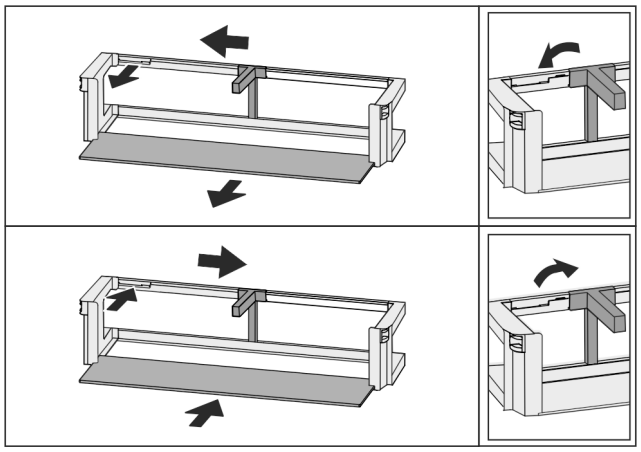

Fig. 99

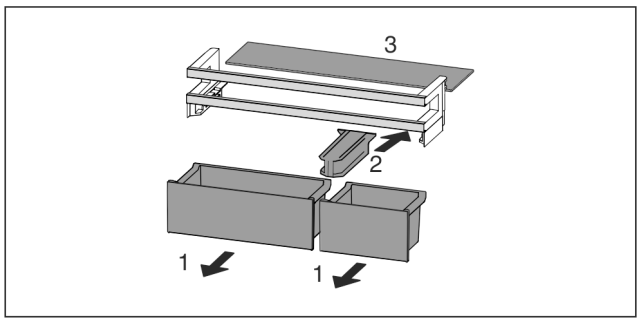

Fig. 100

▶ Disassemble the door rack.

8.2 Shelves

8.2.1 Adjusting/removing the shelves

The shelves are prevented from being pulled out accidentally by pull out stops.

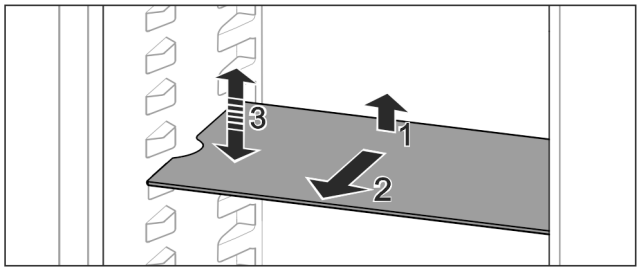

Fig. 101

▶ Lift the shelf and pull forward.
▷ Line up the side runner.

▶ Adjust the height of the shelf: Lift or lower it to the desired height and slide it in.

-or-

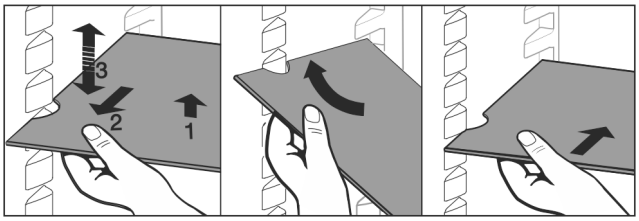

Fig. 102

▶ Remove the shelf completely: Pull it out to the front.

▶ Easier removal: Set the shelf at an angle.
▶ Insert the shelf again: Slide it in all the way.
▷ The pull-out stoppers point downwards.
▷ The pull-out stoppers are behind the front support.

You can also remove the shelf above the EasyFresh compartments.

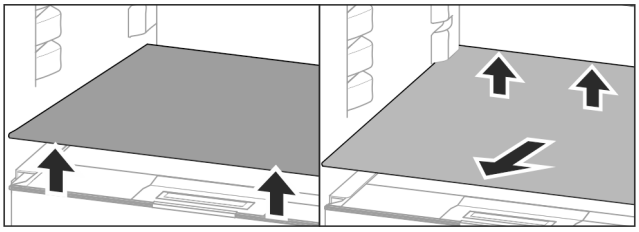

Fig. 103

Removing the shelf:
▶ Lift the shelf at the front and back.
▶ Pull it out towards you.

Do not store any goods on the compartment cover below!

Inserting the shelf:
▶ Place the shelf at an angle, sloping down towards the back.
▷ The pull-out stoppers point downwards.
▶ Slide the shelf into place.

8.3 Dividing shelf

8.3.1 Using the dividing shelf

The shelves are prevented from being pulled out accidentally by pull out stops.

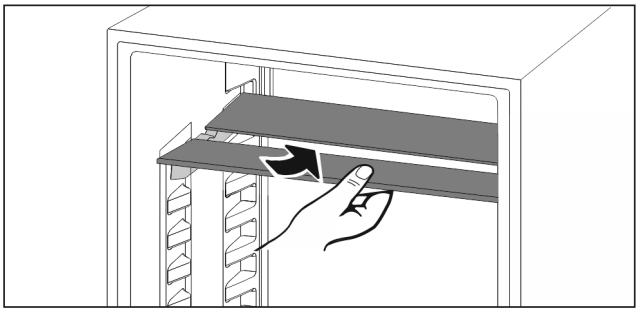

Fig. 104

▶ Push the dividing shelf underneath as shown.

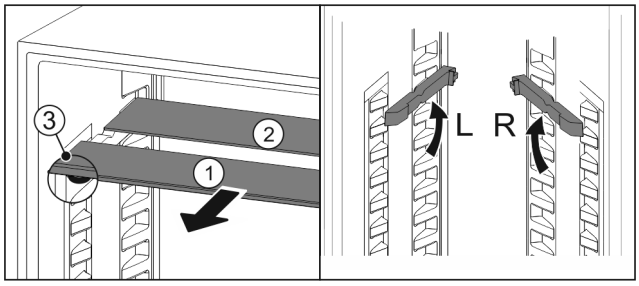

Fig. 105

Adjusting the height:

▶ Pull the glass panels out *Fig. 105 (1)* from the front, one at a time.
▶ Release the support rails and click in at the height you want.
▶ Slide in the glass panels one at a time.
▷ Flat pull-out stoppers at the front, right behind the support rails.
▷ High pull-out stoppers at the back.

Using both shelves:

▶ Hold the glass panel with one hand and pull it to the front.
▷ The glass panel *Fig. 105 (1)* and trim strip are at the front.
▷ The stops *Fig. 105 (3)* point down.

8.4 VarioSafe

The VarioSafe offers space in the refrigerator compartment for small groceries, packages, tubes and jars, for example.

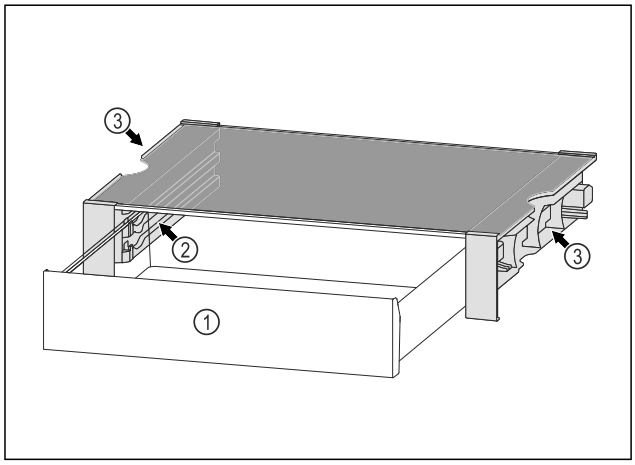

Fig. 106

(1) VarioSafe drawer

(2) Side panels with ribs for VarioSafe drawer

(3) Recesses on the left and right side panel

8.4.1 Inserting the VarioSafe

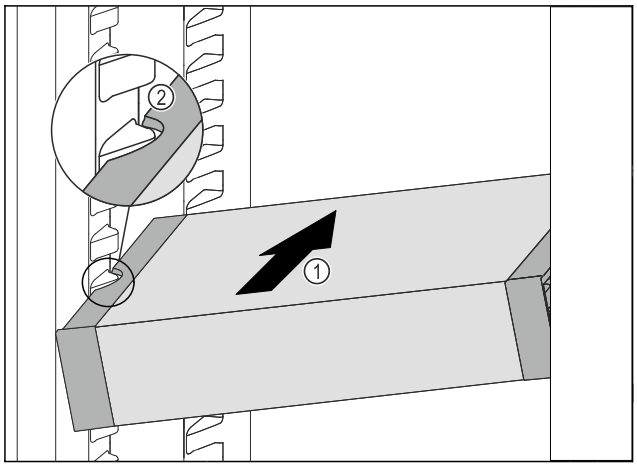

Fig. 107

▶ Insert the VarioSafe into the fridge section at an angle *Fig. 107 (1)* until the recesses in the side *Fig. 107 (2)* of the VarioSafe are at the level of the support rib in the fridge section.

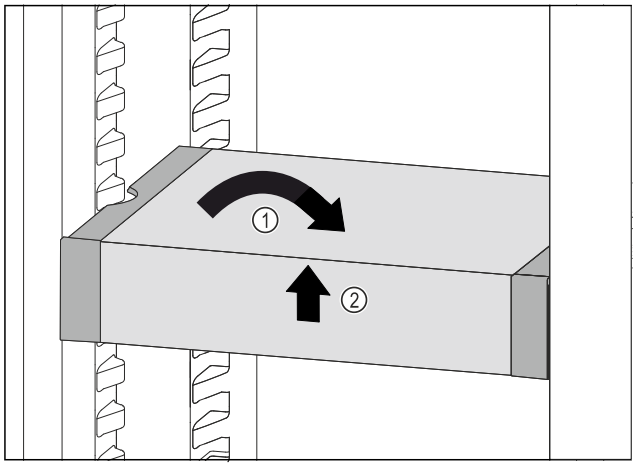

Fig. 108

▶ Set VarioSafe straight. *Fig. 108 (1)*
▶ Lift VarioSafe at the front. *Fig. 108 (2)*

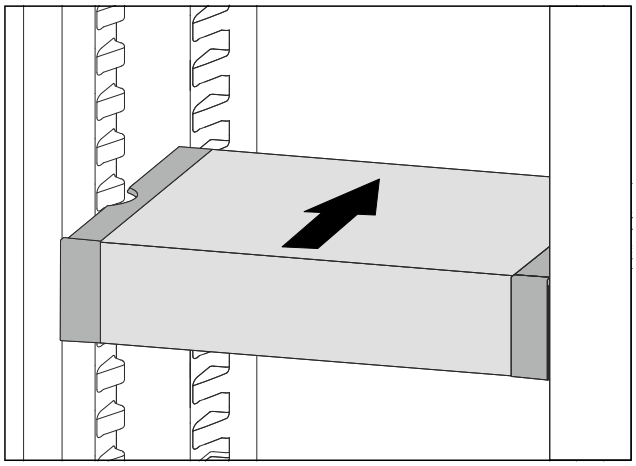

Fig. 109

▶ Lift VarioSafe up toward the front.
▶ Push VarioSafe in to the rear.
▶ Lower VarioSafe.
▷ VarioSafe audibly engages.
▷ VarioSafe is inserted.

8.4.2 Repositioning the VarioSafe

You can move the VarioSafe as a whole in the refrigerator compartment.

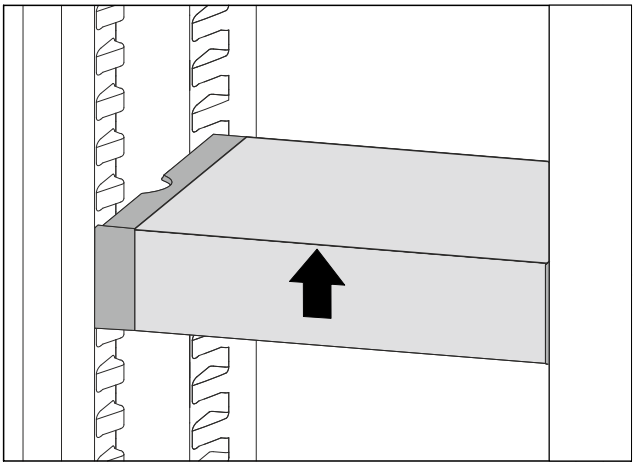

Fig. 110

▶ Lift VarioSafe at the front.

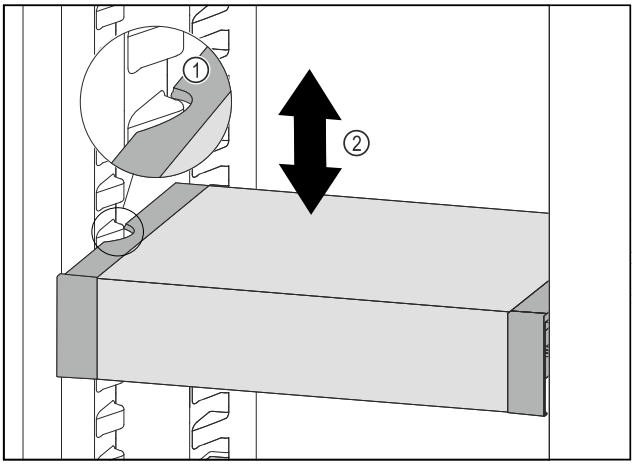

Fig. 111

▶ Pull VarioSafe forwards until the recesses in the side of the VarioSafe are at the level of the support rib in the refrigerator compartment. *Fig. 111 (1)*

▶ Move VarioSafe up or down in the refrigerator compartment until the desired height is reached. *Fig. 111 (2)*

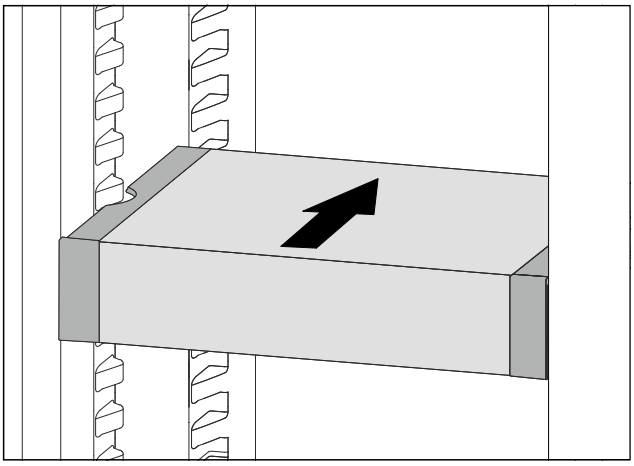

Fig. 112

▶ Lift VarioSafe at the front.

▶ Push VarioSafe in to the rear.

▷ VarioSafe audibly engages.

▷ VarioSafe is offset in height.

8.4.3 Moving the VarioSafe drawer

You can use the VarioSafe drawer at two different heights. If you would like to store taller foodstuffs in the VarioSafe drawer, slide the VarioSafe drawer in on the bottom rib. If you would like to store smaller foodstuffs in the VarioSafe drawer, slide the VarioSafe drawer in on the top rib.

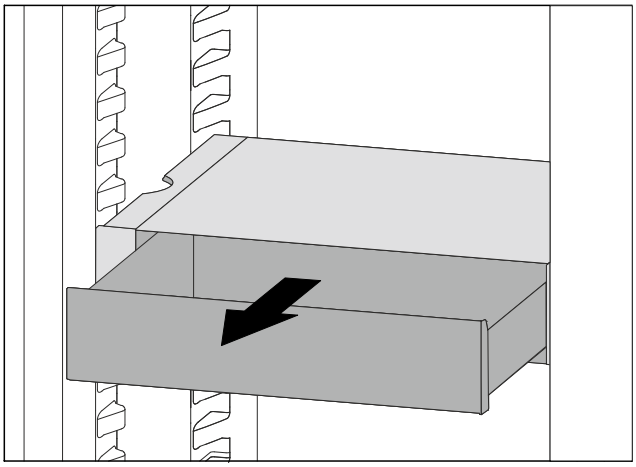

Fig. 113

▶ Pull out the VarioSafe drawer as far as it will go.

▶ Lift the VarioSafe drawer up at the front.

▶ Remove the VarioSafe drawer to the front.

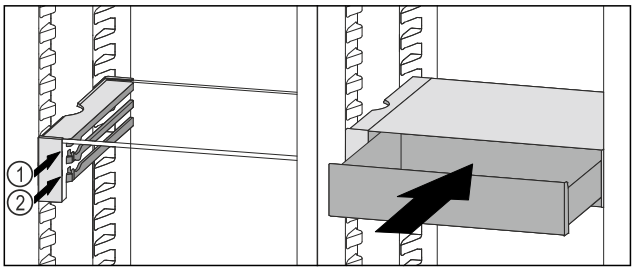

Fig. 114

▶ Lift the VarioSafe drawer up at the front.

▶ Place the VarioSafe drawer behind the stoppers on desired rib *Fig. 114 (1)* or *Fig. 114 (2)*.

▷ VarioSafe drawer is offset in height.

8.4.4 Removing the VarioSafe

You can remove the VarioSafe as a whole.

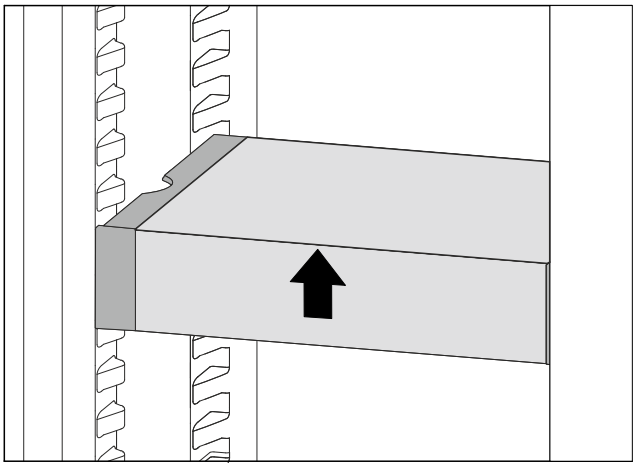

Fig. 115

▶ Lift VarioSafe at the front.

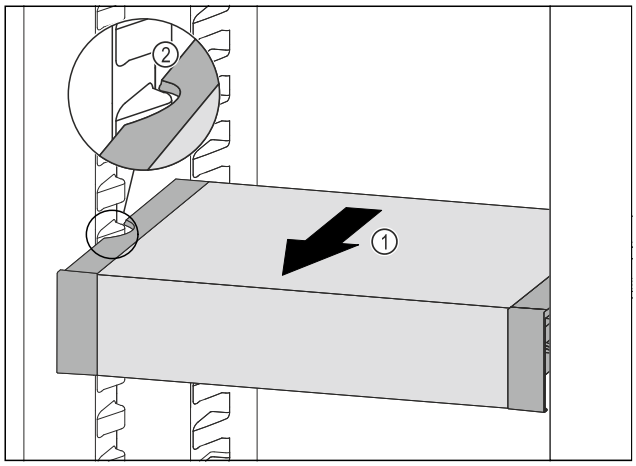

Fig. 116

▶ Pull VarioSafe forwards *Fig. 116 (1)* until the recesses in the side of the VarioSafe are at the level of the support rib in the fridge section. *Fig. 116 (2)*

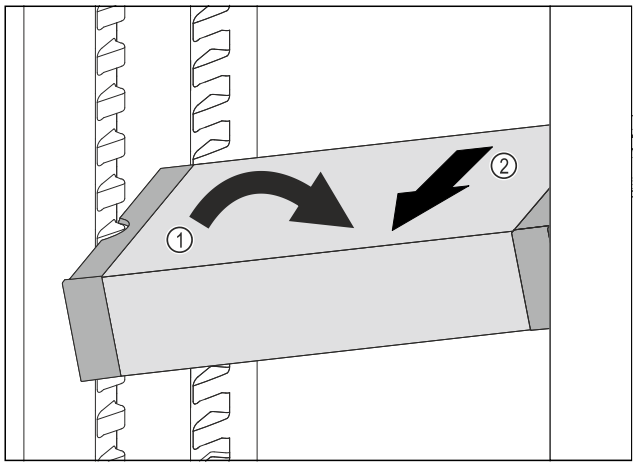

Fig. 117

▶ Set VarioSafe in refrigerator compartment at an angle. *Fig. 117 (1)*
▶ Take VarioSafe out to the front. *Fig. 117 (2)*
▷ VarioSafe is removed.

8.4.5 Disassembling the VarioSafe

You can disassemble the VarioSafe into its individual parts if you want to clean the VarioSafe or if you need to install or remove parts.

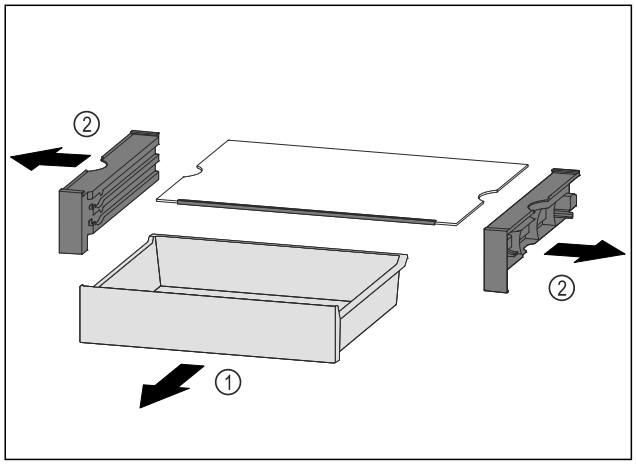

Fig. 118

▶ Remove VarioSafe as a whole. (see 8.4.4 Removing the VarioSafe)
▶ Disassemble VarioSafe according to the illustration.

8.5 Drawers

You can remove the drawers for cleaning.

You can remove the drawers to use VarioSpace.

The way to remove/insert the drawers varies depending on the pull-out system. Your appliance can contain various pull-out systems.

Note
The energy consumption increases and the cooling power goes down if ventilation is not sufficient.
▶ Leave the bottom drawer in the appliance!
▶ Always leave the fan air vents clear on the back wall!

8.5.1 Drawer on telescopic rails

The drawer runs on extendible rails (telescopic rails). There are fully extendible telescopic rails and telescopic rails with partial pull-out. Drawers which are fully extendible can be pulled out fully from the appliance. Drawers with partial pull-out cannot be removed fully from the appliance. The system in your appliance depends on the type of appliance.

Partial pull-out fridge compartment

Removing drawer

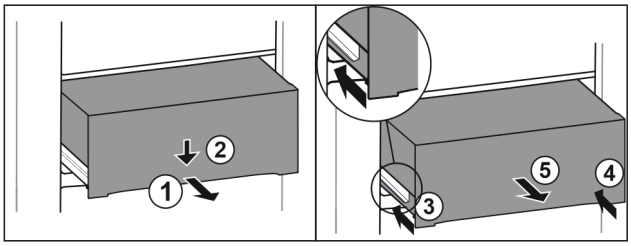

Fig. 119

▶ Pull out drawer half-way. *Fig. 119 (1)*
▶ Push the drawer down at the front. *Fig. 119 (2)*
▶ Push the left rail in by about 2 cm. *Fig. 119 (3)*
▶ Push the right rail in by about 2 cm. *Fig. 119 (4)*
▶ Remove drawer to the front. *Fig. 119 (5)*

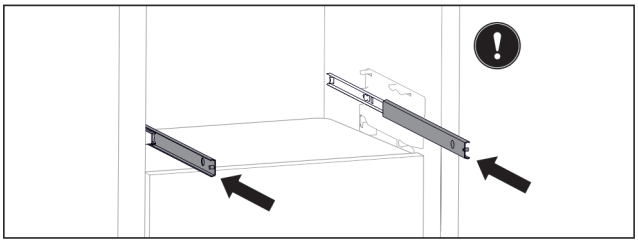

Fig. 120

If the rails are not yet fully inserted after removing the drawer:
▶ Push rails in completely.

Inserting drawer

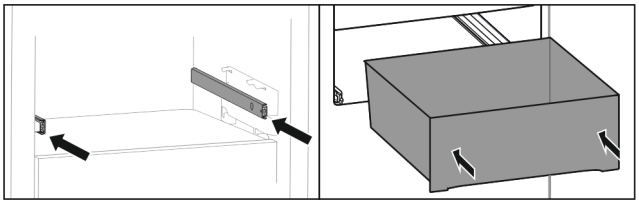

Fig. 121

▶ Slide rails in.
▶ Place drawer on rails.
▶ Slide in drawer to the back.

8.6 EasyFresh-Safe cover

You can remove the compartment cover for cleaning.

8.6.1 Removing the compartment cover

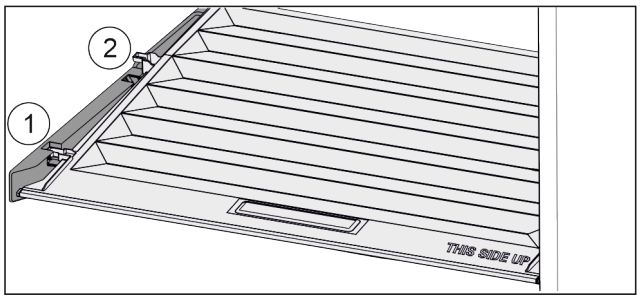

Fig. 122

When the drawers are removed:

▶ Pull the lid up at the front to the opening in the retaining parts *Fig. 122 (1)*.

▶ Lift from the back and pull it up and out *Fig. 122 (2)*.

8.6.2 Inserting the compartment cover

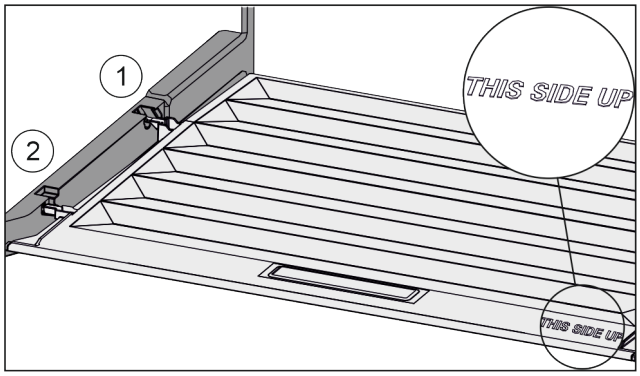

Fig. 123

If the text THIS SIDE UP points upwards:

▶ Insert the lip of the cover over the opening of the rear bracket *Fig. 123 (1)* and click into place *Fig. 123 (2)*.

▶ Position the cover where you want it (see 8.7 Adjusting the moisture levels) .

8.7 Adjusting the moisture levels

You can adjust the moisture in the drawer yourself by adjusting the compartment cover.

The compartment lid is attached to the drawer and can be hidden by a shelf or additional drawers.

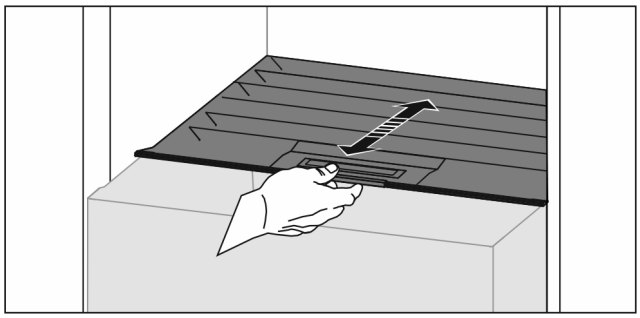

Fig. 124

Low air humidity

▶ Open the drawer.

▶ Slide the compartment cover forwards.

▷ With the drawer closed: Gap between the cover and the compartment.

▷ The air moisture in the Safe decreases.

High air moisture

▶ Open the drawer.

▶ Slide the cover back.

▷ With the drawer closed: The cover seals the compartment.

▷ The air moisture in the Safe increases.
If there is too much moisture in the compartment:

▶ Choose the setting “low air moisture”.

-or-

▶ Remove any excess moisture with a cloth.

8.8 Glass shelves

You can remove the glass shelves under the drawers for cleaning.

You can remove the glass shelves under the drawers to use VarioSpace.

8.8.1 Removing / inserting the glass shelf

Make sure that the following requirements are fulfilled:

❑ Glass shelf under the drawer: The drawer has been removed. (see 8.5 Drawers)

Removing glass shelf

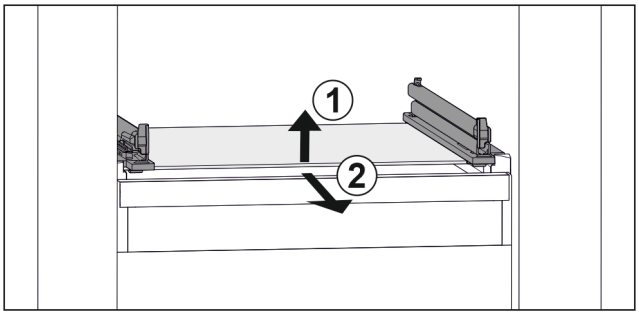

Fig. 125 Example illustration of glass shelf

▶ Lift glass shelf at the front. *Fig. 125 (1)*

▶ Take out glass shelf to the front. *Fig. 125 (2)*

Inserting glass shelf

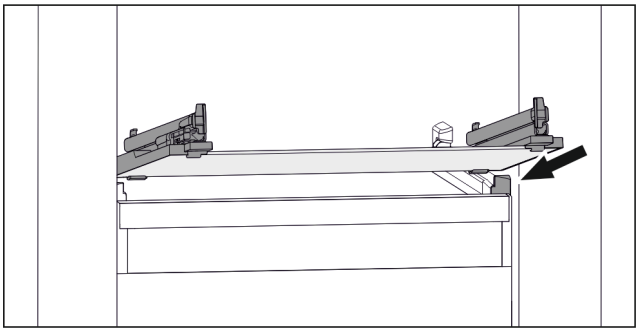

Fig. 126 Example illustration of glass shelf

▶ Position glass shelf at an angle behind the stoppers. (see Fig. 126)

▶ Lower glass shelf.

▶ Slide in glass shelf to the back.

8.9 EasyTwist-Ice*

With the EasyTwist-Ice you can make enough ice cubes for the whole household. The EasyTwist-Ice is supplied with water via a water tank.

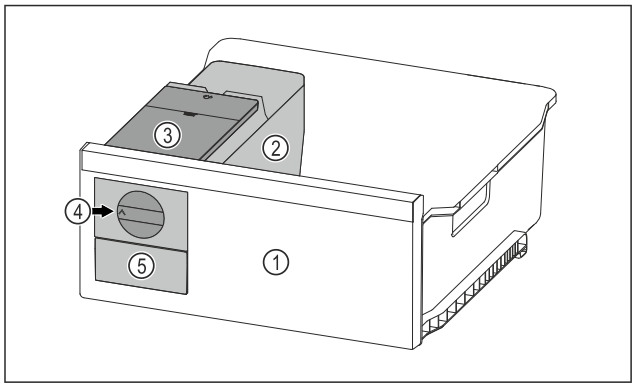

Fig. 127 Example illustration

(1) Freezer drawer with EasyTwist-Ice
(2) Body with ice cube tray
(3) Water tank
(4) Rotary knob
(5) Ice cube drawer

Note
Do not change the position of the freezer drawer with the EasyTwist-Ice in the appliance.

8.9.1 Making ice cubes

The amount of ice cubes you can make in a given period of time with the EasyTwist-Ice depends on the freezer temperature of the appliance. The lower the temperature in the appliance, the more ice cubes you can make.

Maximum number of ice cubes in the ice cube tray:	20 ice cubes
Maximum capacity of the ice cube drawer:	40 ice cubes (equivalent to two ice cube batches)
More information about the time needed for ice cube production:	(see 10.1 Technical specifications)

Make sure that the following requirements are fulfilled:

❑ Components of the EasyTwist-Ice have been cleaned.

Filling the water tank

WARNING
Risk of poisoning due to contaminated water!
▶ Only fill the water tank with potable water.

NOTICE
Sugar-content liquids!
Damage to EasyTwist-Ice.
▶ Only fill with cold drinking water.

Note
Using filtered, decarbonised water ensures the best-tasting drinking water for your ice cubes.
This water quality can be achieved using a table water filter of the kind available in trade retail outlets.
▶ Always fill the water tank only with filtered, decarbonised drinking water.

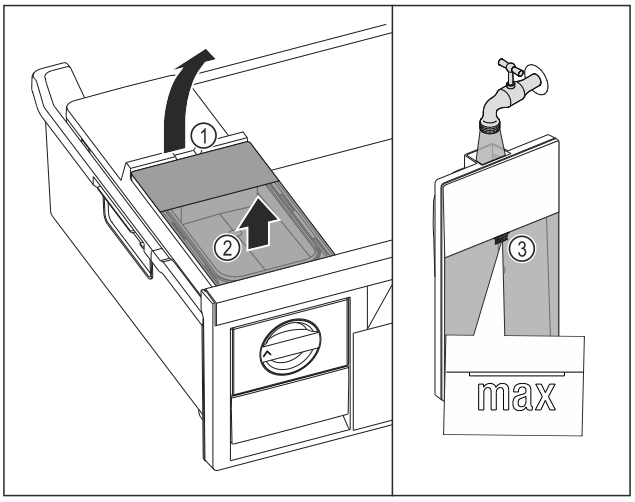

Fig. 128

▶ Pull out freezer drawer as far as it will go.
▶ Lift the water tank at the recess *Fig. 128 (1)*.
▶ Remove the water tank by lifting it upwards. *Fig. 128 (2)*
▶ Fill the water tank with drinking water up to the mark *Fig. 128 (3)*.

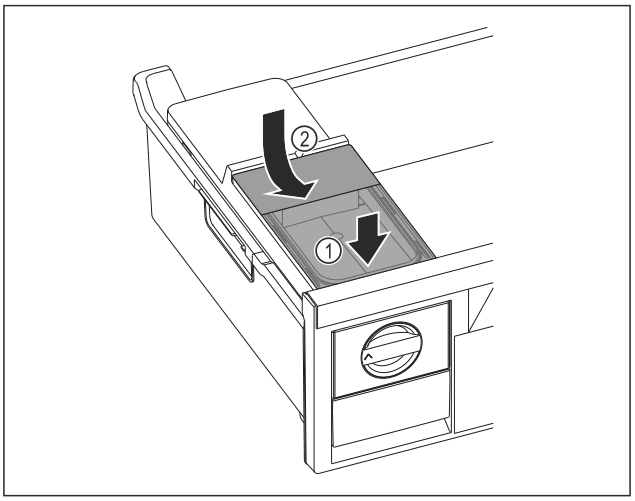

Fig. 129

▶ Position the water tank at the front. *Fig. 129 (1)*
▶ Lower the water tank at the rear. *Fig. 129 (2)*
▶ Slide in the freezer drawer.

Releasing the ice cubes

Make sure that the following requirements are fulfilled:

❑ The required time for the production of ice cubes has been observed. (see 10.1 Technical specifications)
❑ Freezer drawer is fully inserted.
❑ Ice cube drawer is fully inserted.

▶ Turn the rotary knob *Fig. 127 (4)* clockwise as far as it will go.
▷ Ice cubes fall from the ice cube tray into the ice cube drawer *Fig. 127 (5)*.
If all the ice cubes do not come out of the ice cube tray:
▶ Turn the rotary knob clockwise several times to the stop.

8.10 IceMaker*

The IceMaker will produce ice cubes for household use only.

Ensure that the following conditions are met:

- IceMaker is cleaned (see 9 Maintenance) .
- IceMaker drawer is cleaned.
- IceMaker drawer is fully inserted.

*** Depending on model and options**

8.10.1 Producing ice cubes

The volume depends on the freezing temperature. The colder the temperature, the more ice cubes the system can produce in a certain time period.

After the IceMaker is turned on for the first time, it can take up to 24 hours for the first ice cubes to be made.

- ▶ Activate the IceMaker function .
- ▶ To make a high number of ice cubes: Activate the MaxIce function .
- ▶ To make a high number of ice cubes: Move the divider in the IceMaker drawer or remove it completely.*
- ▶ Distribute the ice cubes evenly in the drawer to increase the capacity.
- ▶ Closing the drawer: IceMaker starts making ice cubes again automatically.

Note
When a certain level is reached in the IceMaker drawer, it stops producing ice cubes. The IceMaker does not fill the drawer all the way to the top.

8.10.2 Using the drawer with the IceMaker deactivated

If you deactivate the IceMaker, then you can use the entire IceMaker drawer as a freezer drawer.

- ▶ Deactivate IceMaker. (see Deactivating the IceMaker / MaxIce)

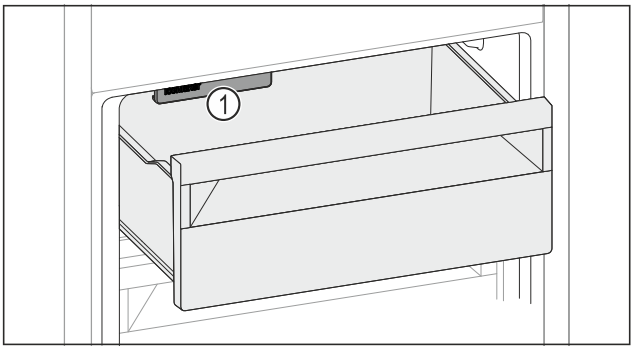

Fig. 130

- ▶ Place food in drawer.
  If you put food in the left side of the drawer:
- ▶ Watch out for the IceMaker *Fig. 130 (1)*.

8.11 VarioSpace

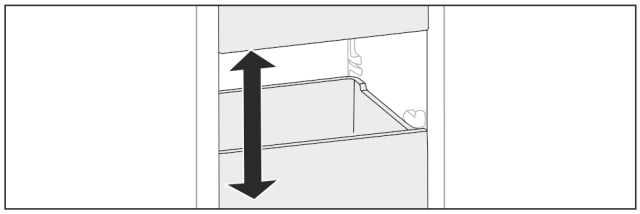

Fig. 131

You can remove drawers and glass panels from your appliance. This provides more room for large food items such as poultry, joints of meat, large game, and tall baked products. You can then freeze these items whole for later preparation.

- ▶ Note the weight limits on the drawers and glass panels (see 10.1 Technical specifications) .

8.12 Butter dish

8.12.1 Opening/closing the butter dish

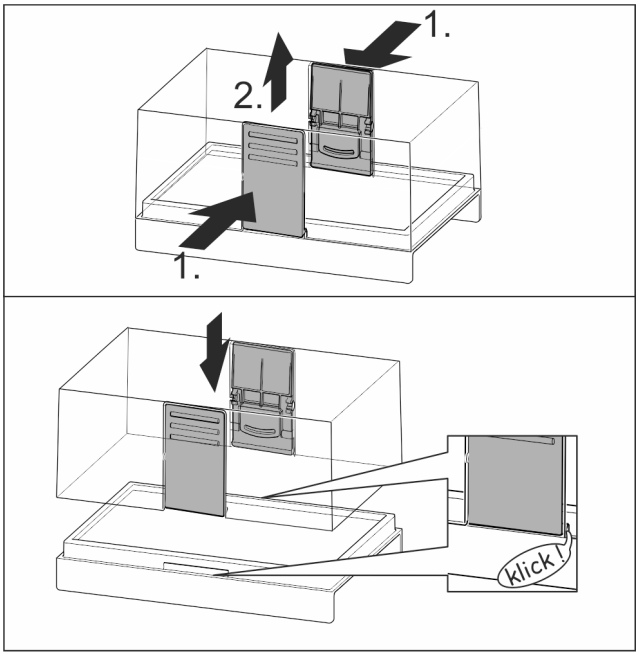

Fig. 132

8.12.2 Dismantling the butter dish

You can take the butter dish apart for cleaning.

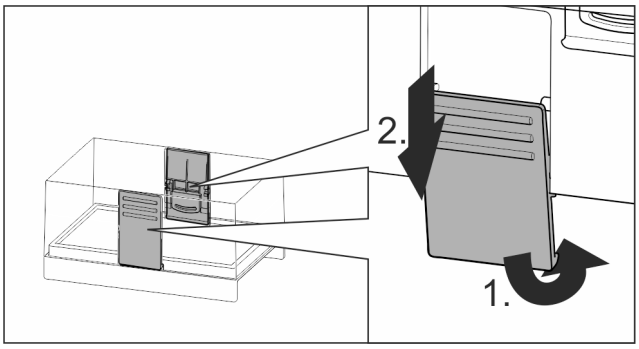

Fig. 133

- ▶ Disassembling the butter dish.

8.13 Egg rack

You can pull out and turn the egg rack. You can use both sides of the egg rack so you can label specifics like the purchase date.

8.13.1 Using the egg rack

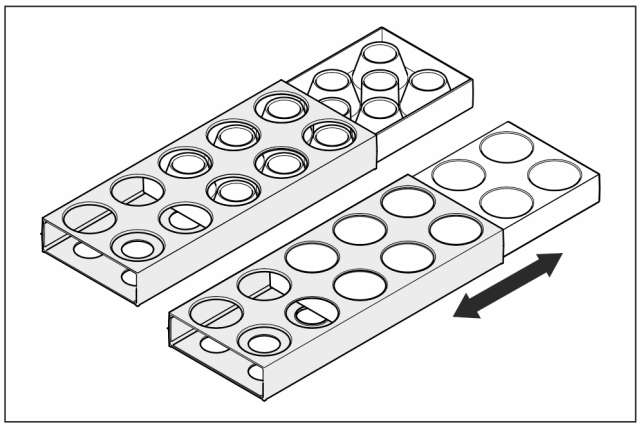

Fig. 134

▶ Top layer: for storing hen eggs.
▶ Bottom layer: for storing quail eggs.

8.14 Bottle holder

8.14.1 Using the bottle holder

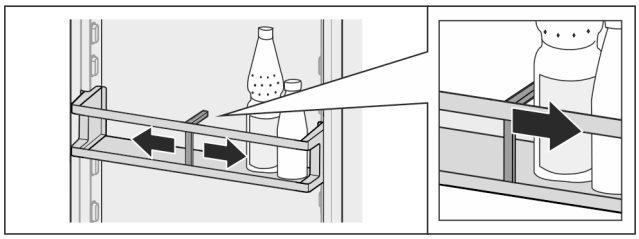

Fig. 135

▶ Push the bottle holder onto the bottles.
▷ The bottles are prevented from falling over.

8.14.2 Removing the bottle holder

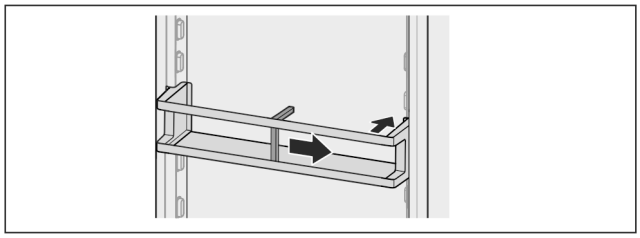

Fig. 136

▶ Move the bottle holder all the way to the right.
▶ Push the bottle holder to the back to remove.

8.15 Freezer pack

Freezer packs prevent the temperature rising too quickly should there be a power cut.

The freezer packs are in the drawer.

8.15.1 Using the freezer pack

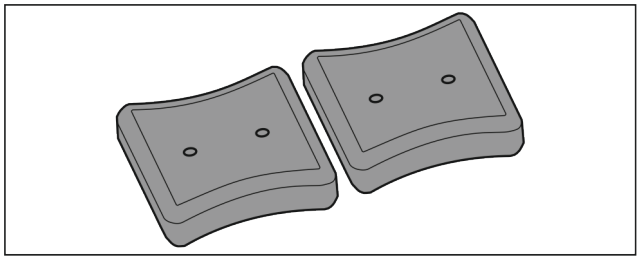

Fig. 137

When the freezer packs are fully frozen:

▶ Place on the frozen goods in the top, front part of the freezer.

8.16 Ice cube tray with cover*

8.16.1 Using the ice cube tray

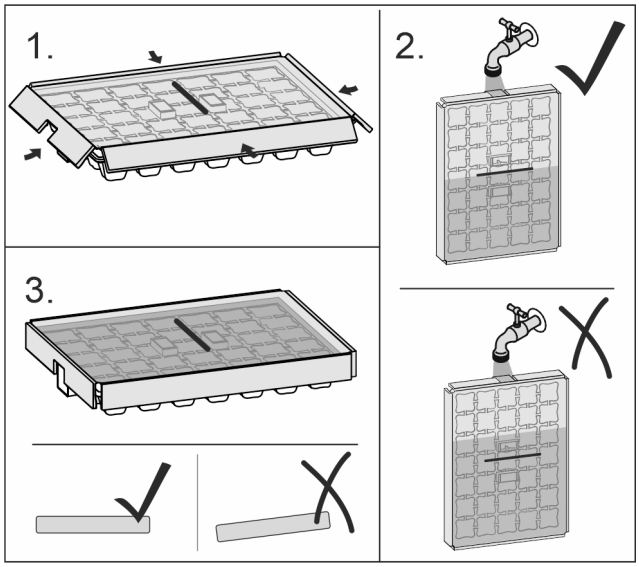

Fig. 138

When the water is frozen:

▶ Hold ice cube tray under hot water for a short time.
▶ Remove the lid.
▶ Gently turn the ends of the ice cube tray in opposite directions.
▶ Release the ice cubes.

8.16.2 Dismantling the ice cube tray

You can take the ice cube tray apart for cleaning.

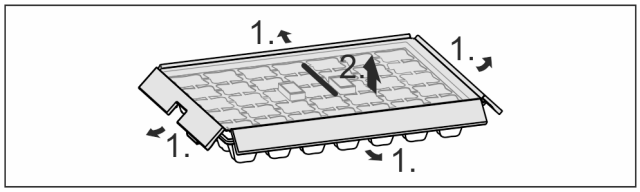

Fig. 139

▶ Disassembling the ice cube tray.

8.17 Flexible ice compartment divider*

The IceMaker's ice cube drawer has a flexible ice compartment divider. This allows you to store larger quantities of ice cubes or additional food items as needed. You can move or remove the ice compartment divider.

8.17.1 Moving in the flexible ice compartment divider

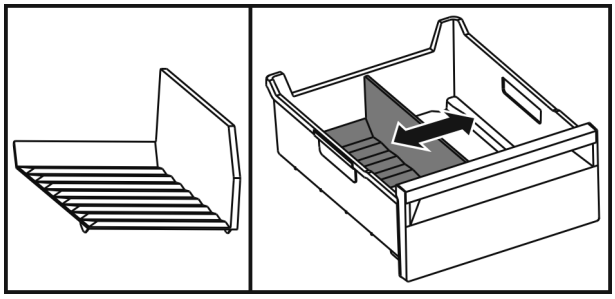

Fig. 140 Example illustration of the ice compartment divider

▶ Move the ice compartment divider to the desired position.

8.17.2 Removing the flexible ice compartment divider

Make sure that the following requirements are fulfilled:

❑ Ice cube drawer is removed. (see 8.5 Drawers)

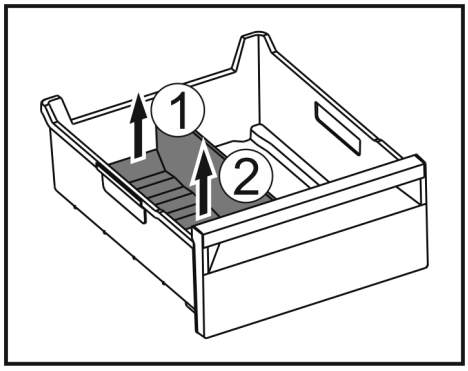

Fig. 141

▶ Lift the rear part of the ice compartment divider. *Fig. 141 (1)*

▶ Remove the ice compartment divider upwards. *Fig. 141 (2)*

8.17.3 Putting in the flexible ice compartment divider

Make sure that the following requirements are fulfilled:

❑ Ice cube drawer is removed. (see 8.5 Drawers)

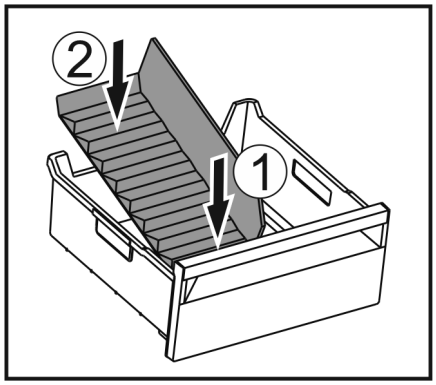

Fig. 142

▶ Insert the front part of the ice compartment divider. *Fig. 142 (1)*

▶ Lower the rear part of the ice compartment divider to the drawer bottom. *Fig. 142 (2)*

9 Maintenance

9.1 FreshAir carbon filter

The FreshAir carbon filter is in the compartment above the fan.

It guarantees the best air quality.

❑ Replace the carbon filter every 6 months.
When the reminder is set, a message on the display prompts you to change it.

❑ The carbon filter can be disposed of with the regular household waste.

Note

FreshAir activated charcoal filters can be purchased from the Liebherr-Hausgeräte store at home.liebherr.com/shop/de/deu/zubehor.html.

9.1.1 Removing the FreshAir carbon filter

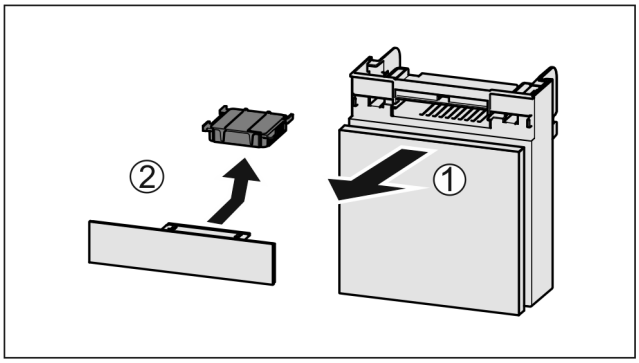

Fig. 143

▶ Pull out the compartment *Fig. 143 (1)*.

▶ Remove the carbon filter *Fig. 143 (2)*.

9.1.2 Inserting the FreshAir carbon filter

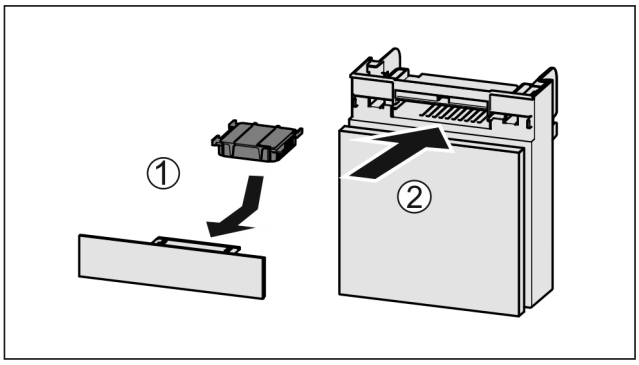

Fig. 144

▶ Insert the carbon filter as shown in the diagram *Fig. 144 (1)*.

▷ The carbon filter clicks into place.
If the carbon filter is pointing downwards:

▶ Push the compartment in *Fig. 144 (2)*.

▷ The carbon filter is now ready for use.

9.2 Disassembling / assembling pull-out systems

9.2.1 Notes on disassembly

You can disassemble some of the pull-out systems for cleaning. Your appliance can contain a variety of pull-out systems.

The following pull-out systems can be disassembled or cannot be disassembled:

Pull-out system	can be disassembled / cannot be disassembled
Partial pull-out fridge compartment	cannot be disassembled

9.3 Defrosting the appliance

9.3.1 Defrosting the fridge compartment

Defrosting is performed automatically. The water from the thawing process drains through the outlet and evaporates.

▶ Clean the drain opening regularly (see 9.4 Cleaning the appliance) .

9.3.2 Defrosting the freezer compartment with NoFrost

Defrosting is performed automatically with the NoFrost system. The moisture is deposited on the evaporator, is periodically defrosted and evaporates.

The appliance does not need to be defrosted.

9.4 Cleaning the appliance

9.4.1 Ready

WARNING
Danger of electric shock!
▶ Remove the refrigerator connector or interrupt the power supply.

WARNING
Risk of fire
▶ Do not damage the refrigeration circuit.

▶ Empty the appliance.
▶ Remove mains connector.
-or-
▶ Activate CleaningMode. (see CleaningMode)

9.4.2 Clean the housing

NOTICE
Improper cleaning!
Damage to the appliance.
▶ Only use soft cleaning cloths and ph-neutral all-purpose cleaners.
▶ Do not uses abrasive sponges or steel wool which may cause scratches.
▶ Do not use any sharp or abrasive cleaning agents, nor any that contain sand, chloride or acid.

WARNING
Risk of injury and damage as a result of hot steam!
Hot steam can lead to burns and can damage the surfaces.
▶ Do not use any steam cleaners!

▶ Wipe the housing down with soft, clean cloth. If very dirty, use lukewarm water with a neutral cleaner. Glass surfaces can also be cleaned with glass cleaner.

9.4.3 Cleaning the mosquito screen

▶ Clean the mosquito screens regularly with a vacuum cleaner.
▶ Remove stubborn stains with a soft cloth.

9.4.4 Cleaning the interior

NOTICE
Improper cleaning!
Damage to the appliance.
▶ Only use soft cleaning cloths and ph-neutral all-purpose cleaners.
▶ Do not uses abrasive sponges or steel wool which may cause scratches.
▶ Do not use any sharp or abrasive cleaning agents, nor any that contain sand, chloride or acid.

▶ Plastic surfaces: clean by hand with a soft clean cloth, lukewarm water and a little detergent.
▶ Metal surfaces: clean by hand with a soft clean cloth, lukewarm water and a little detergent.
▶ Drain hole: remove deposits using a thin item (for example a cotton bud).

9.4.5 Cleaning the dry rear panel

You can remove the dry rear panel for cleaning.

Removing the rear panel

▶ Remove all equipment parts.

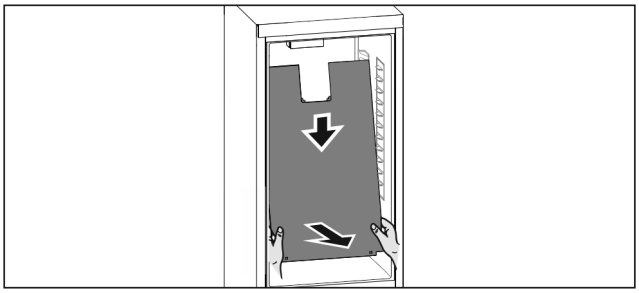

Fig. 145

▶ Hold the rear panel with both hands at the bottom and pull downward vigorously at the same time.
▶ Pull the rear panel out to the front by the bottom end.
▷ The rear panel has been removed.
If you want to continue operating the appliance with the rear panel removed:
▶ Set the *D-Value* to *D2*. (see D-Value)

Inserting the rear panel

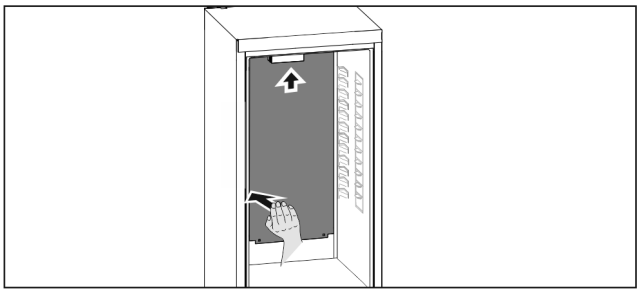

Fig. 146

▶ Make sure the appliance is completely empty.
▶ Slide in the rear panel from below to the top.
▶ Press back vigorously on the left-hand side of the rear panel.
▷ The rear panel clicks into place.
▶ Insert the equipment parts.
▶ Set the *D-Value* to *D1*. (see D-Value)

9.4.6 Clean the components

NOTICE
Improper cleaning!
Damage to the appliance.
▶ Only use soft cleaning cloths and ph-neutral all-purpose cleaners.
▶ Do not uses abrasive sponges or steel wool which may cause scratches.
▶ Do not use any sharp or abrasive cleaning agents, nor any that contain sand, chloride or acid.

Clean with a soft, clean cloth, lukewarm water and some detergent:

- Door rack
- VarioSafe
- EasyFresh-Safe cover
- Drawer

*** Depending on model and options**

Please note: Do not remove the magnet on the drawer. The magnet ensures the functionality of the IceMaker.*
- Divider in the IceMaker drawer*
- Components of the EasyTwist-Ice*

Clean with a damp cloth:
- Retractable rails
  Please note: The grease in the tracks is used for lubrication and must not be removed!

Wash in the dishwasher up to 60 °C:
- Door rack
- VarioBox
- Bottle rack
- Shelf
- Dividing shelf
- Holder of the dividing shelf
- Egg rack
- Butter dish
- Ice cube tray*
- Ice cube scoop*

▶ To disassemble components: see the relevant section.
▶ Clean the components.

9.4.7 Cleaning the EasyTwist-Ice*

Clean the EasyTwist-Ice in the following situations:
- First use
- Not using for more than 48 hours
- When cleaning is required

Dismantling the EasyTwist-Ice

Make sure that the following requirements are fulfilled:
❑ The drawer has been removed. (see 8.5 Drawers)
❑ The drawer is placed on a table.

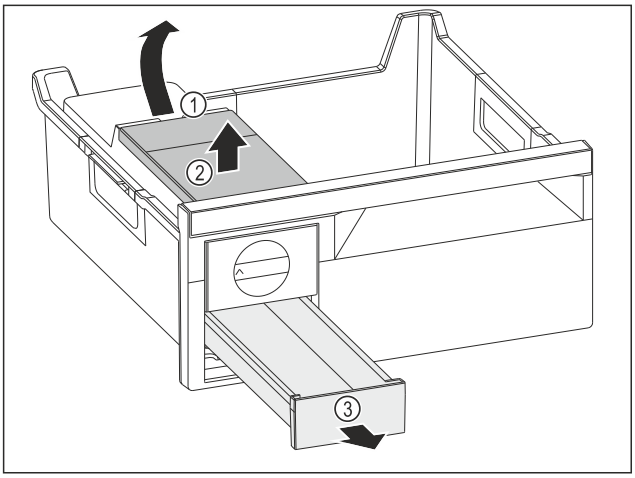

Fig. 147

▶ Removing the water tank: Lift the water tank by the recess *Fig. 147 (1)*.
▶ Remove the water tank *Fig. 147 (2)* upwards.
▶ Remove the ice cube drawer *Fig. 147 (3)* to the front.

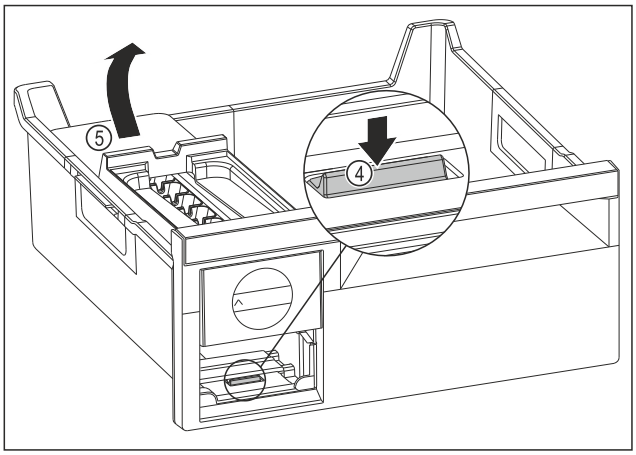

Fig. 148

▶ Removing the EasyTwist-Ice body: Use your finger to push the tab *Fig. 148 (4)* down and use your other hand to lift the EasyTwist-Ice body *Fig. 148 (5)* from behind at the same time.
▶ Remove the EasyTwist-Ice body from the freezer drawer.

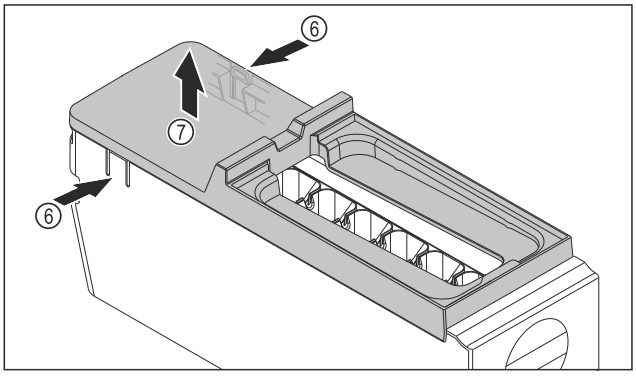

Fig. 149

▶ Removing the EasyTwist-Ice body cover: Push the tabs *Fig. 149 (6)* on both sides of the EasyTwist-Ice body with one hand.
▶ Use the other hand to remove the cover *Fig. 149 (7)* upwards.
▷ EasyTwist-Ice is dismantled into four parts. (see Fig. 150)

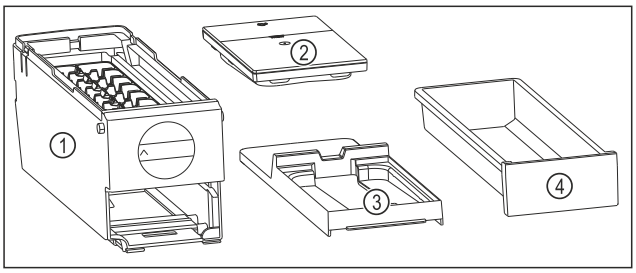

Fig. 150 Components of the EasyTwist-Ice

(1)	EasyTwist-Ice body with ice cube tray	**(3)**	Cover
(2)	Water tank	**(4)**	Ice cube drawer

NOTICE
Risk of damage due to improper dismantling!
Equipment breaking, jumping and cracking. If you dismantle the EasyTwist-Ice body further, you may damage the rotary knob or other parts of the EasyTwist-Ice body.
▶ Only dismantle the EasyTwist-Ice into the components shown. (see Fig. 150)
▶ Clean the EasyTwist-Ice body *Fig. 150 (1)* as a whole.

Cleaning the EasyTwist-Ice

Make sure that the following requirements are fulfilled:

❑ The EasyTwist-Ice is dismantled. (see Dismantling the EasyTwist-Ice)

▶ Clean the ice cube drawer, water tank, cover and Easy-Twist-Ice body with warm water and a little detergent.
▶ Dry all cleaned components thoroughly with a dry cloth.
▷ The EasyTwist-Ice is clean.

Installing the EasyTwist-Ice

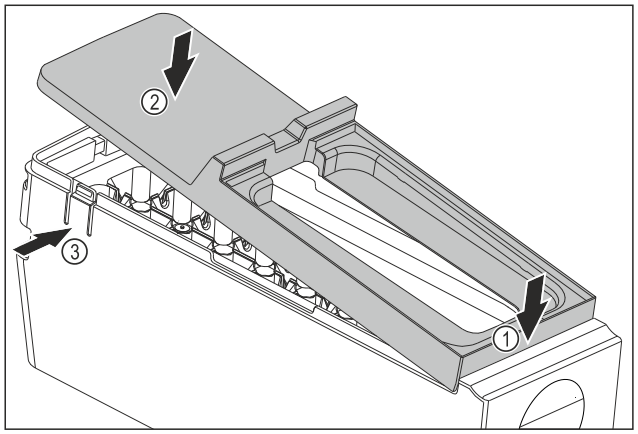

Fig. 151

▶ Installing the EasyTwist-Ice body cover: Place the cover on the front. *Fig. 151 (1)*
▶ Lower the cover at the rear. *Fig. 151 (2)*
▷ The cover locks into both tabs *Fig. 151 (3)* audibly.

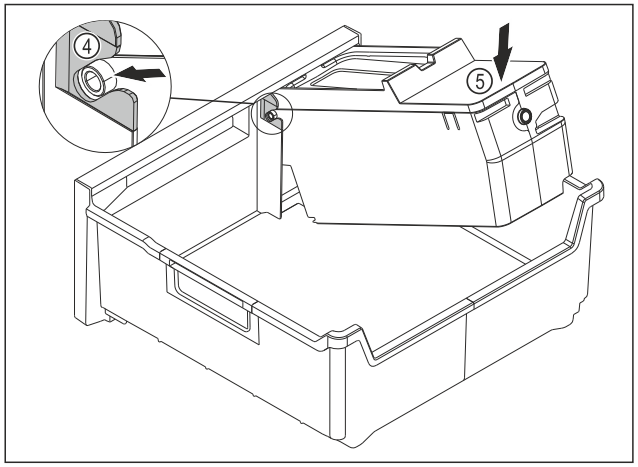

Fig. 152

▶ Installing the EasyTwist-Ice body: Push the axes for the EasyTwist-Ice body into the guides *Fig. 152 (4)*.
▶ Press the EasyTwist-Ice body *Fig. 152 (5)* down at the back.
▷ The EasyTwist-Ice body locks in audibly.

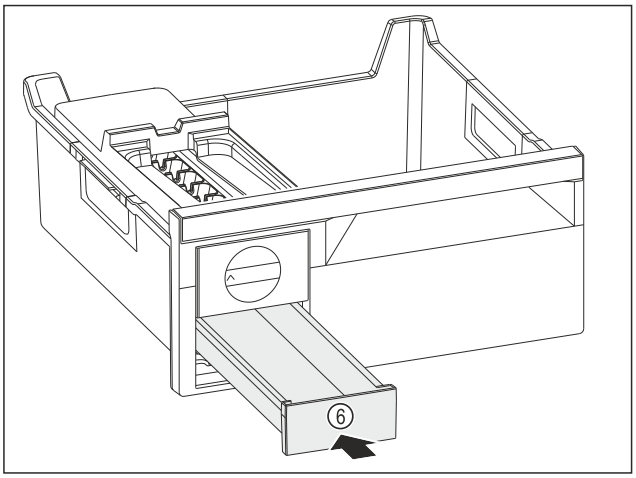

Fig. 153

▶ Insert the ice cube drawer *Fig. 153 (6)*.

WARNING

Risk of poisoning due to contaminated water!

▶ Only fill the water tank with potable water.

▶ Fill the water tank with water.
▶ Insert the water tank.
▶ Insert the drawer. (see 8.5 Drawers)
If you are using unfiltered water:
▶ Dispose of ice cubes that were produced 24 hours after initial ice cube production.

-or-

If you are using filtered water:
▶ Dispose of ice cubes that were produced 48 hours after initial ice cube production.

9.4.8 Cleaning the IceMaker*

There are various options for cleaning the IceMaker.

Cleaning is required in the following cases:

❑ Initial operation

Ensure that the following conditions are met:

❑ IceMaker drawer is emptied.
❑ IceMaker drawer is in place.
❑ The IceMaker is activated.

First use or after a long period of non-use

Clean the IceMaker with the TubeClean function.

▶ Put an empty 1.5 l vessel (max. height 10 cm) in the drawer under the IceMaker.
▶ Activate the TubeClean function.
▷ The rinse process is prepared (max. 60 min.): Symbol flashes.
▷ Water pipes are rinsed: Symbol flashes.
▷ Rinsing process is complete: Function turns off automatically.
▶ Remove the IceMaker drawer and remove the container.
▶ Clean the IceMaker drawer with warm water and a little detergent.
▶ Push the IceMaker drawer in.
▷ The system starts making ice cubes automatically.
▶ Dispose of any ice cubes that were made 24 hours after the first ice cubes.

If cleaning is required

Clean the IceMaker by hand.

▶ Remove the IceMaker drawer and clean with warm water and a little detergent.
▶ Push the IceMaker drawer in.
▷ The system starts making ice cubes automatically.

9.4.9 After cleaning

▶ Wipe the appliance and the components dry.
▶ Connect and switch on the appliance.
▶ Activate SuperFrost (see 7.2 Appliance functions) .
The temperature is cold enough:
▶ Place the food inside.
▶ Repeat cleaning regularly.

10 Customer help

10.1 Technical specifications

Temperature range	
Cooling	2 °C to 9 °C
Freeze	-26 °C to -15 °C

Maximum freezing quantity/24 h	
Freezer compartment	See “Freezing capacity .../24 h” on the type plate

Ice cube production with IceMaker*	
Ice cube production/24 h	At a temperature of -18 °C: 1.2 kg of ice cubes
Maximum ice cube production/24 h	With the MaxIce function on: 1.5 kg of ice cubes

Ice cube production with EasyTwist-Ice*	
Time required at -18 °C	approx. 5.5 h
Time required with SuperFrost activated	approx. 3 h

Time required to reach various temperatures with VarioTemp		
Initial temperature	Target temperature	Time required to reach target temperature
-18 °C	0 °C	>8 h
-18 °C	8 °C	>12 h
8 °C	14 °C	>6 h
14 °C	-18 °C	>4 h

10.2 Operating noises

The appliance makes different noises when it is on.

- At **higher temperatures** the appliance uses less energy but works for longer. It is **quieter**.
- At **lower temperatures** the food is cooled faster. It is **louder**.

  Examples:
  - Functions on (see 7.2 Appliance functions)
  - Fan running
  - Food recently added
  - High ambient temperature
  - Door open for a while

Noise	Possible cause	Type of noise
Bubbling and splashing	Coolant flowing into the cooling circuit.	Normal operating noise
Hissing	Coolant sprays into the cooling circuit.	Normal operating noise
Humming	The appliance is cooling. The volume depends on the cooling output.	Normal operating noise
Suction noises	Soft-closing door is being opened and closed.	Normal operating noise
Humming and rustling	The fan is running.	Normal operating noise
Clicking	Components are switched on and off.	Normal switching noise
Rattling or humming	Valves or flaps are working.	Normal switching noise

Noise	Possible cause	Type of noise	Lifting
Vibration	Improper setup	Defective noise	Level the appliance using the adjustable feet.
Rattling	Components, items inside the appliance	Defective noise	Secure components. Leave enough space between the items.

10.3 Technical fault

Your appliance is designed and built to ensure it works reliably and has a long service life. In the unlikely event that a fault occurs during operation, please check whether it is due to an operating error. If so, you will be charged for the callout and repair costs even if it falls within the warranty period.

You can fix the following faults yourself.

10.3.1 Appliance function

Defect	Cause	Remedy
The appliance is not working.	→ The appliance is not switched on.	▶ Switch the appliance on.
	→ The power plug is not properly plugged into the socket.	▶ Check the power plug.
	→ There is something wrong with the power outlet fuse.	▶ Check the fuse.

Defect	Cause	Remedy
	→ Power cut	▶ Keep the appliance closed. ▶ Protecting food: Lay freezer packs on top of the food or use another freezer if the power is off for a prolonged period. ▶ Do not re-freeze defrosted food,
	→ The appliance plug does not fit the appliance properly.	▶ Check the appliance plug.
Temperature is not cold enough.	→ The appliance door is not closed properly.	▶ Close the appliance door.
	→ Not enough ventilation.	▶ Keep ventilation grille clear, and clean it.
	→ The ambient temperature is too high.	▶ Problem solution: (see 1.4 Appliance range of use)
	→ The appliance was opened too many times or for too long.	▶ Wait to see if the required temperature corrects itself. If not, contact Customer Service. (see 10.4 Customer Service)
	→ Too much fresh food was placed inside without SuperFrost.	▶ Solution: (see SuperFrost)
	→ The temperature is set incorrectly.	▶ Turn down the temperature and check after 24 hours.
	→ The appliance is too close to a heat source (oven, radiator, etc).	▶ Move the appliance or the heat source.
The door seal is defective or needs to be replaced for another reason.	→ The door seal can be replaced. It can be replaced without the need for special tools.	▶ Contact Customer Service. (see 10.4 Customer Service)
The appliance builds up too much ice or condensa-tion.	→ The door seal may have slipped out of its groove.	▶ Check that the door seal is well fitted in the groove.
The appliance is hot to touch on the outside*.	→ The heat of the refrigeration circuit is used to avoid condensation.	▶ This is normal.

10.3.2 Features

Defect	Cause	Remedy
The IceMaker is not producing ice cubes.*	→ The IceMaker is not on.	▶ Activate the IceMaker.
	→ The drawer of the IceMakers is not connected properly.	▶ Push the drawer in correctly.
The internal light does not come on.	→ The appliance is not switched on.	▶ Switch the appliance on.
	→ The door was open for longer than 15 minutes.	▶ Interior lighting turns off automatically after approx. 15 min. with the door open.
	→ The LED interior light is faulty or the lid is damaged.	▶ Contact Customer Service. (see 10.4 Customer Service)

10.4 Customer Service

First check whether you can rectify the fault yourself (see 10 Customer help) . If you cannot rectify the problem, contact Customer Service.

You can find the address at home.liebherr.com/service.

WARNING
Unprofessional repair!
Injuries.
- ▶ Have any repairs and action - not expressly specified - on the appliance and mains cable carried out by service personnel only. (see 9 Maintenance)
- ▶ A damaged mains cable may only be replaced by the manufacturer, the manufacturer's Customer Service or a similarly qualified person.
- ▶ In the case of appliances with an IEC connector, the change may be made by the customer.

10.4.1 Contacting Customer Service

Make sure that the following appliance information is available:

- ❑ Appliance name (model and index)
- ❑ Service no. (Service)
- ❑ Serial no. (S no.)

▶ Call up the appliance information via the display.
-or-
▶ Refer to the type plate for appliance information. (see 10.5 Model plate)

▶ Note down the appliance information.
▶ Notify customer service: Report errors and the appliance information.
▷ This will help us to provide you with a faster, more accurate service.
▶ Follow further instructions from Customer Service.

10.5 Model plate

The model plate is behind the drawers on the inside of the appliance.

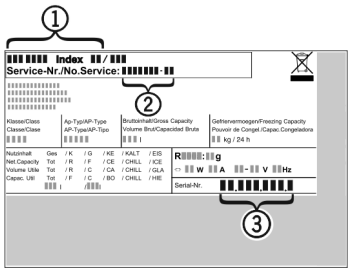

Fig. 154
(1) Appliance description **(3)** Serial no.
(2) Service no.
▶ Note the data on the model plate.

11 Shutting down

▶ Empty the appliance.
▶ Deactivate IceMaker. (see Deactivating the IceMaker / MaxIce) *
▶ Switch off appliance. (see Turn off appliance)
▶ Remove mains connector.
▶ Remove appliance connector if required: Remove and move from left to right at the same time.
▶ Clean appliance. (see 9.4 Cleaning the appliance)
▶ Leave the door open, so that no unpleasant odours arise.

12 Disposal

12.1 Preparing appliance for disposal

Liebherr uses batteries in some of its appliances. In the EU, for environmental reasons, legislation obliges the end user to remove these batteries before disposing of old appliances. If your appliance contains batteries, a corresponding notice is attached.

Lamps — If you can remove the lamps yourself without destroying them, also remove these before disposal.

▶ Take the appliance out of operation.
▶ Appliances with batteries: remove the batteries. For description, see **Maintenance** chapter.
▶ If possible: remove lamps without destroying them.

12.2 Disposing of the appliance in an environmentally friendly manner

The appliance still contains valuable materials and must be disposed of separately from unsorted municipal waste.

Dispose of batteries separately from the old appliance. To do this, you can return the batteries free of charge to retailers as well as recycling centres and collection centres for recyclable materials.

Lamps — Dispose of removed lamps via the respective collection systems.

WARNING
Leaking coolant and oil!
Fire. The coolant contained in the appliance is eco-friendly, but also flammable. The oil contained in the appliance is flammable. Escaping coolant and oil can ignite if the concentration is high enough and in contact with an external heat source.
- ▶ Do not damage the pipelines of the coolant circuit and the compressor.

▶ Transport the appliance without damaging it.
▶ Dispose of batteries, lamps and the appliance according to the above specifications.

home.liebherr.com/fridge-manuals

EN fridge/freezer

Issue date: 20240202

Part number index: 7086383-00

Liebherr-Hausgeräte Marica EOOD
Bezirk Plovdiv
4202 Radinovo
Bulgarien