LH 40 Industry Litronic

LIEBHERR

Material handling machine

Generation
5

Operating weight
36,400–40,900 kg*

* Without attachment

Engine
155 kW / 211 HP
Stage NR China IV
Stage IIIA (compliant)

System performance
237 kW

Performance

Power plus speed –
Redefined performance

Economy

Good investment –
Savings for long-term

Reliability

Durability and sustainability –
Quality down to the last detail

Comfort

Perfection at a glance –
When technology is comfortable

Maintainability

Efficiency bonus –
Even with maintenance and service

* Without attachment

LH 40 M Industry Litronic

Operating weight
36,400–38,700 kg*
Engine
155 kW / 211 HP
Stage NR China IV
Stage IIIA (compliant)
System performance
237 kW

LH 40 C Industry Litronic

Operating weight
37,600–40,900 kg*
Engine
155 kW / 211 HP
Stage NR China IV
Stage IIIA (compliant)
System performance
237 kW

Technical data

Diesel engine

Rating per ISO 9249	155 kW (211 HP) at 1,800 RPM
Model	Liebherr D934
Type	4 cylinder in-line
Bore / Stroke	122 / 150 mm
Displacement	7.0 l
Engine operation	4-stroke diesel Common-Rail Turbo-charged and after-cooled Reduced emissions
Air cleaner	Dry-type air cleaner with pre-cleaner, primary and safety elements
Engine idling	Sensor controlled
Electrical system	
Voltage	24 V
Batteries	2 x 180 Ah / 12 V
Alternator	Three-phase current 28 V / 140 A
Stage NR China IV	
Harmful emissions values	In accordance with GB 20891-2014 and HJ 1014-2020 Stage IV
Emission control	Liebherr-SCRFilter technology
Fuel tank	453 l
Urea tank	65 l
Stage IIIA (compliant)	
Harmful emissions values	In accordance with ECE-R.96 Power Band H
Fuel tank	453 l

Cooling system

Diesel engine	Water-cooled Compact cooling system consisting cooling unit for water, hydraulic oil and charge air with stepless thermostatically controlled fan

Hydraulic controls

Power distribution	Via control valves with integrated safety valves, simultaneous actuation of chassis and equipment. Swing drive in separate closed circuit
Servo circuit	
Equipment and swing	With electro-hydraulic pilot control and proportional joystick levers
Chassis mobile	Electro-proportional via foot pedal
Chassis crawler	With electric proportionally functioning foot pedals or adjusted with plugable levers
Additional functions	Via switch or electro-proportional foot pedals
Proportional control	Proportionally acting transmitters on the joysticks for additional hydraulic functions

Hydraulic system

Hydraulic pump	
For equipment and travel drive	2 Liebherr axial piston variable displacement pumps (double construction)
Max. flow	2 x 237 l/min.
Max. pressure	350 bar
For swing drive	Reversible axial piston variable displacement pump, closed-loop circuit
Max. flow	144 l/min.
Max. pressure	370 bar
Hydraulic pump regulation and control	2 circuit Liebherr-Synchron-Comfort-system (LSC) with electronic engine speed sensing regulation, pressure and flow compensation, automatic oil flow optimizer
Hydraulic tank	285 l
Hydraulic system	605 l
Filtration	1 main return filter with integrated partial micro filtration (5 µm)
MODE selection	Adjustment of engine and hydraulic performance via a mode pre-selector to match application, e.g. for especially economical and environmentally friendly operation or for maximum material handling and heavy-duty jobs
S (Sensitive)	Mode for precision work and lifting through very sensitive movements
E (Eco)	Mode for especially economical and environmentally friendly operation
P (Power)	Mode for high performance with low fuel consumption
P+ (Power-Plus)	Mode for highest performance and for very heavy duty applications, suitable for continuous operation
Engine speed and performance setting	Stepless alignment of engine output and hydraulic power via engine speed

Swing drive

Drive	Liebherr axial piston motor in a closed system, Liebherr planetary reduction gear
Swing ring	Liebherr, sealed race ball bearing swing ring, internal teeth
Swing speed	0–7.5 RPM stepless
Swing torque	84 kNm
Holding brake	Wet multi-disc (spring applied, pressure released)
Option	Slewing gear brake Comfort

Cab

Cab	TOPS safety cab structure (tip-over protection) with individual windscreens or featuring a slide-in subpart under the ceiling, headlights integrated in the ceiling, a door with a sliding window (can be opened on both sides), large stowing and depositing possibilities, shock-absorbing suspension, sound damping insulating, tinted laminated safety glass, separate shades for the sunroof window and windscreen
Operator's seat Comfort	Air cushioned operator's seat with 3D-adjustable arm-rests, headrest, lap belt, seat heater, adjustable seat cushion inclination and length, lockable horizontal sus-pension, automatic weight adjustment, adjustable sus-pension stiffness, pneumatic lumbar vertebrae support and passive seat climatisation with active coal
Arm consoles	Joysticks with control consoles and swivel seat, folding left control console
Operation and displays	Large high-resolution operating unit, self-explanatory, colour display with touchscreen, video-compatible, numerous setting, control and monitoring options, e.g. air conditioning control, fuel consumption, machine and attachment parameters
Air-conditioning	Automatic air-conditioning, recirculated air function, fast de-icing and demisting at the press of a button, air vents can be operated via a menu; recirculated air and fresh air filters can be easily replaced and are accessible from the outside; heating-cooling unit, designed for extreme outside temperatures, sensors for solar radiation, inside and outside temperatures

Equipment

Type	High-strength steel plates at highly-stressed points for the toughest requirements. Complex and stable mount-ings of equipment and cylinders
Hydraulic cylinders	Liebherr cylinders with special sealing and guide system and, depending on cylinder type, shock absorption
Energy recovering cylinder	Liebherr gas cylinder with special sealing and control system
Bearings	Sealed, low maintenance

Undercarriage

Mobile	
Drive	Oversized two speed power shift transmission with addi-tional creeper speed, Liebherr axial piston motor with functional brake valve on both sides
Travel speed Joystick steering	0– 3.0 km/h stepless (creeper speed + transmission stage 1) 0– 5.0 km/h stepless (transmission stage 1) 0–12.0 km/h stepless (creeper speed + transmission stage 2) 0–12.0 km/h stepless (transmission stage 2)
Travel speed Wheel steering (Option)	0– 3.0 km/h stepless (creeper speed + transmission stage 1) 0– 5.0 km/h stepless (transmission stage 1) 0–12.0 km/h stepless (creeper speed + transmission stage 2) 0–20.0 km/h stepless (transmission stage 2)
Driving operation	Automotive driving using accelerator pedal, cruise control function: storage of variable accelerator pedal positions
Axles	60 t drive axles; manual or automatic hydraulically con-trolled front axle oscillation lock
Service brake	Two circuit travel brake system with accumulator; wet and backlash-free disc brake
Holding brake	Wet multi-disc (spring applied, pressure released)
Stabilization	4 point outriggers
Crawler	
Drive	Liebherr compact planetary reduction gear with Liebherr axial piston motor per side of undercarriage
Travel speed	0–4.4 km/h stepless 0–3.0 km/h stepless (creeper speed)
Brake	Functional brake valves on both sides
Holding brake	Wet multi-disc (spring applied, pressure released)
Track pads	Triple grouser, flat
Tracks	Sealed and greased

Complete machine

Lubrication	Liebherr central lubrication system for uppercarriage and equipment, automatically
Mobile (Option)	Liebherr central lubrication system for undercarriage, automatically
Steps system	Safe and durable access system with anti-slip steps; main components hot-galvanised
Noise emission	
ISO 6396	70 dB(A) = L_{pA} (inside cab)
2000/14/EC	103 dB(A) = L_{WA} (surround noise)

LH 40 M – Dimensions

Industry

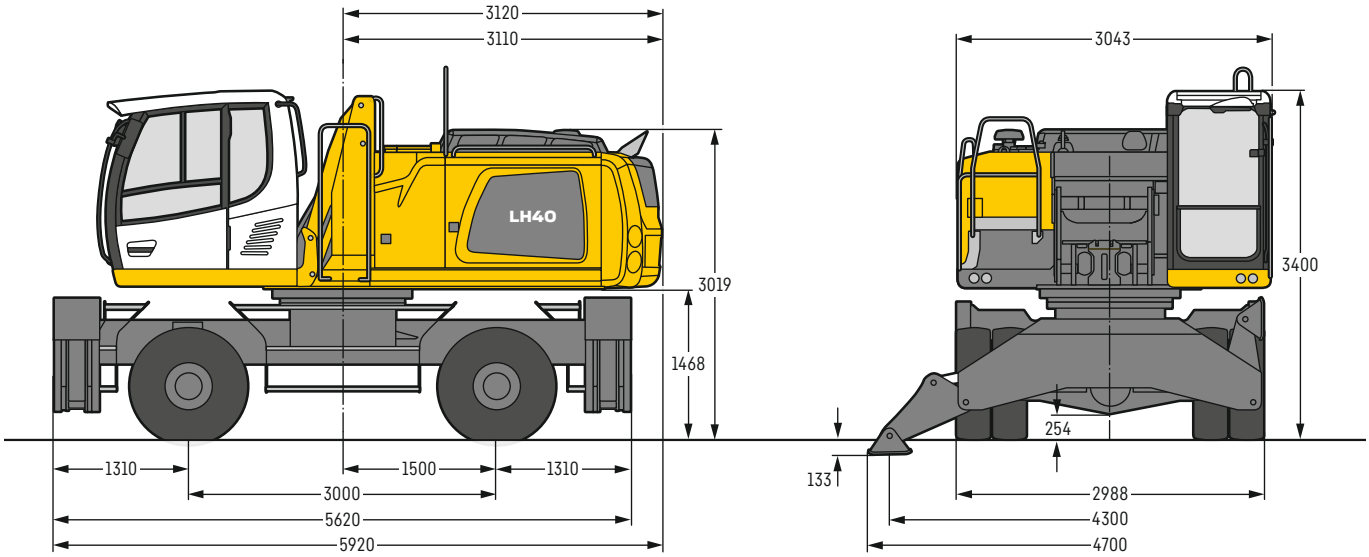

LH 40 M – Choice of cab elevation

Cab elevation LFC (rigid elevation)

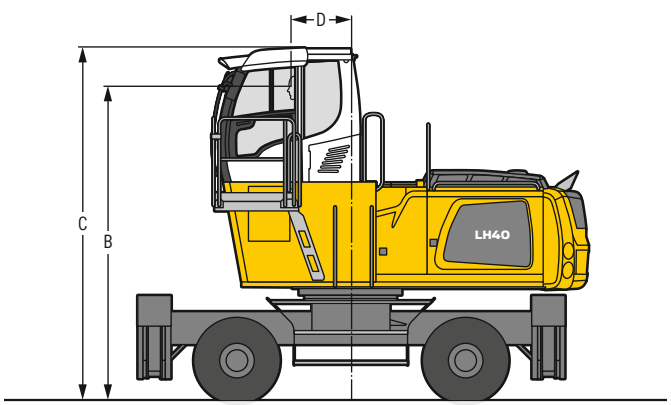

Increase type	LFC 120
Height	1,200 mm
B	4,138 mm
C	4,641 mm
D	788 mm

A rigid cab elevation has a fixed eye level height. For a lower transport height, the shell of the cab can be removed and replaced by a transport device. The dimension C is in this machine design for all rigid cab elevations 3,745 mm.

Tyres 12.00-20

Cab elevation LHC (hydraulic elevation)

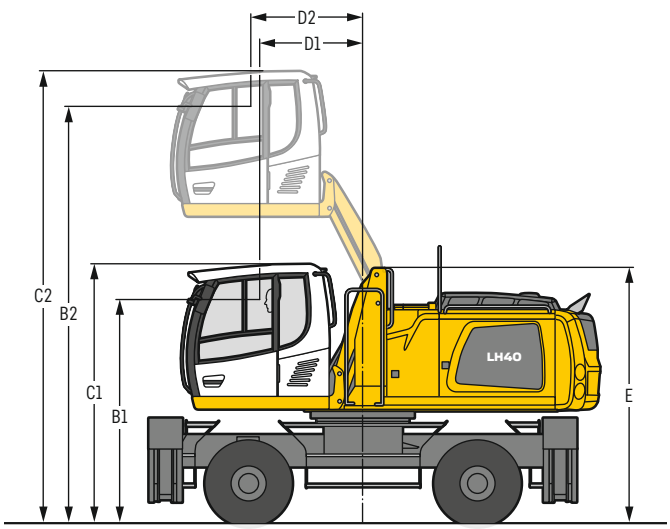

Increase type	LHC 255
B1	2,938 mm
B2	5,485 mm
C1	3,400 mm
C2	5,947 mm
D1	1,343 mm
D2	1,468 mm
E	3,343 mm

The hydraulically adjustable cab allows the driver, that he can choose his field of view freely and at any time within the stroke.

LH 40 C – Dimensions

Industry

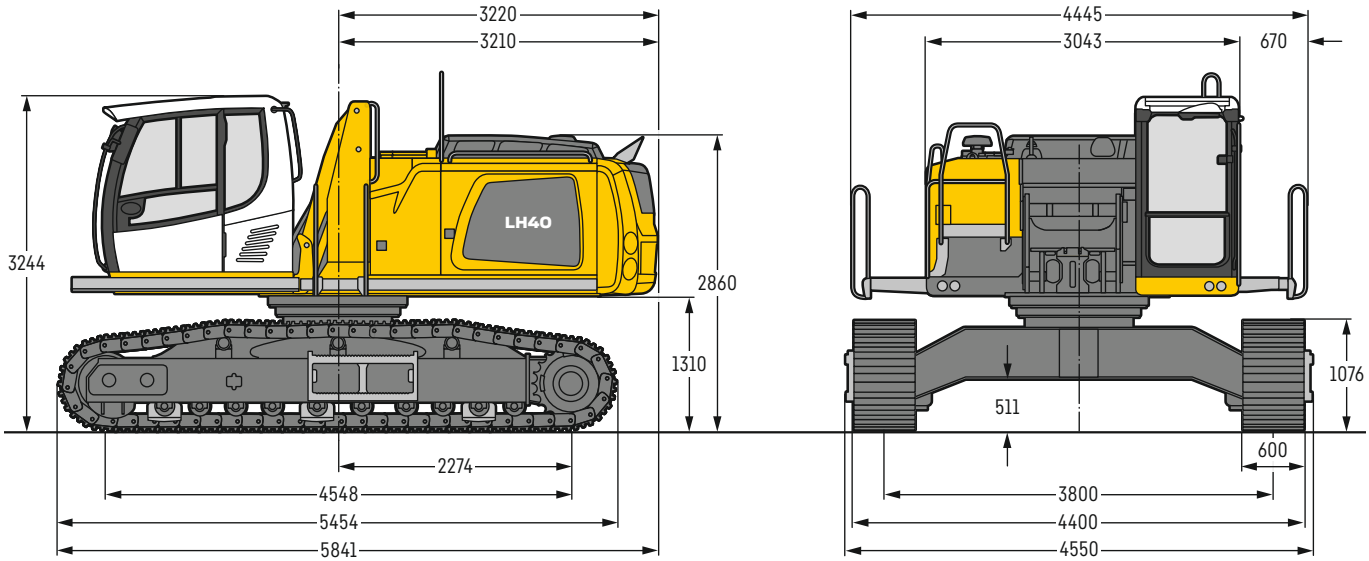

LH 40 C – Choice of cab elevation

Cab elevation LFC (rigid elevation)

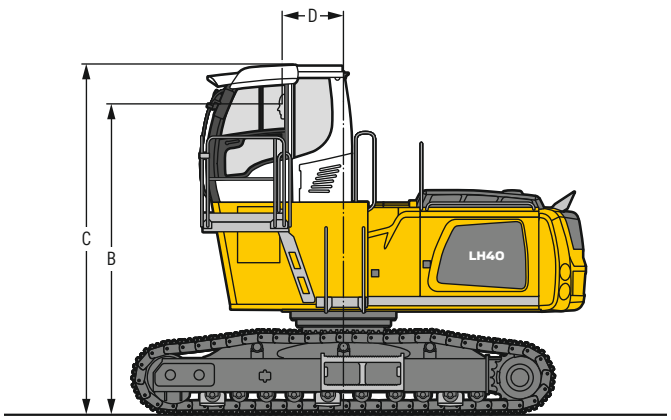

Increase type	LFC 120
Height	1,200 mm
B	3,980 mm
C	4,483 mm
D	788 mm

A rigid cab elevation has a fixed eye level height. For a lower transport height, the shell of the cab can be removed and replaced by a transport device. The dimension C is in this machine design for all rigid cab elevations 3,587 mm.

Cab elevation LHC (hydraulic elevation)

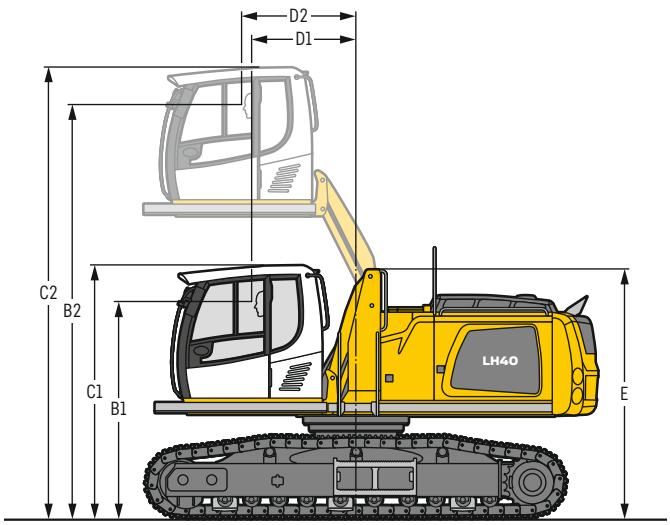

Increase type	LHC 255
B1	2,779 mm
B2	5,326 mm
C1	3,244 mm
C2	5,791 mm
D1	1,343 mm
D2	1,468 mm
E	3,185 mm

The hydraulically adjustable cab allows the driver, that he can choose his field of view freely and at any time within the stroke.

LH 40 M – Equipment GA16

Industry – Kinematic 2A

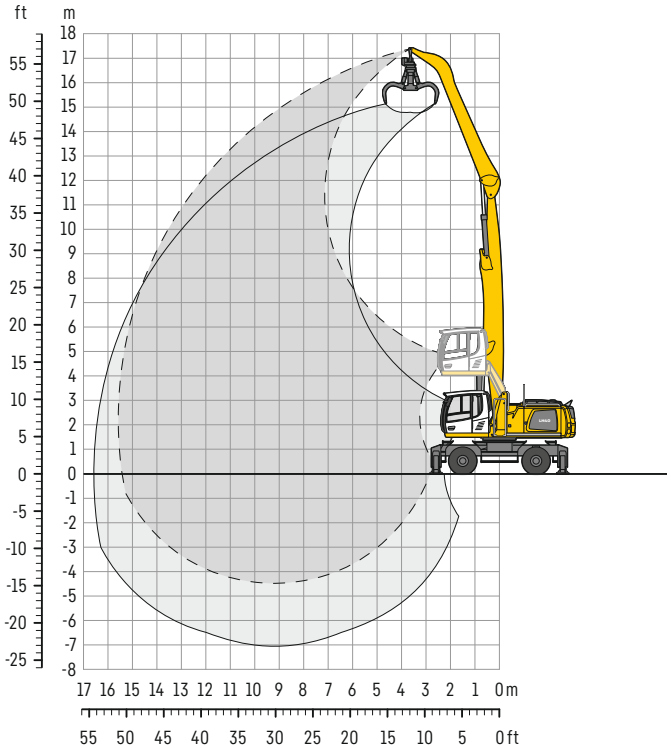

Dimensions

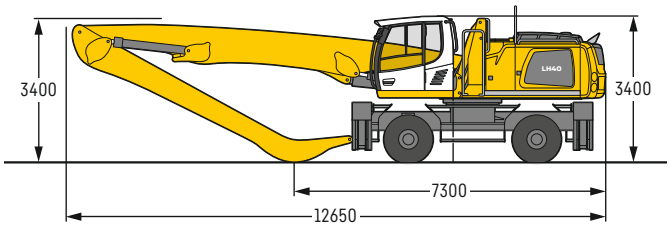

Operating weight

The operating weight includes the basic machine with 4 point outriggers, hydr. cab elevation, 8 solid tyres plus intermediate rings, straight boom 9.10 m, angled stick 6.80 m and multi-tine grab GM 65 / 0.60 m³ semi-closed tines.

Weight	38,500 kg

m	Undercarriage	4.5 m		6.0 m		7.5 m		9.0 m		10.5 m		12.0 m		13.5 m		15.0 m				m
16.5	Stabilizers raised			7.4*	7.4*													7.0*	7.0*	6.2
	4 pt. outriggers down			7.4*	7.4*													7.0*	7.0*	
15.0	Stabilizers raised					6.6	7.6*											4.7	5.6*	8.9
	4 pt. outriggers down					7.6*	7.6*											5.6*	5.6*	
13.5	Stabilizers raised					7.0	7.9*	5.0	6.4	3.6	4.7							3.4	4.4	10.8
	4 pt. outriggers down					7.9*	7.9*	6.9*	6.9*	5.5*	5.5*							4.9*	4.9*	
12.0	Stabilizers raised					7.1	7.7*	5.1	6.5	3.8	4.9	2.8	3.7					2.7	3.6	12.2
	4 pt. outriggers down					7.7*	7.7*	6.8*	6.8*	6.1*	6.1*	5.0*	5.0*					4.6*	4.6*	
10.5	Stabilizers raised					7.0	7.7*	5.1	6.5	3.8	4.9	2.8	3.8					2.2	3.0	13.2
	4 pt. outriggers down					7.7*	7.7*	6.8*	6.8*	6.1*	6.1*	5.5*	5.5*					4.3*	4.3*	
9.0	Stabilizers raised					6.9	7.9*	5.0	6.4	3.7	4.8	2.8	3.8	2.1	2.9			1.9	2.6	14.0
	4 pt. outriggers down					7.9*	7.9*	6.9*	6.9*	6.1*	6.1*	5.5*	5.5*	4.7	5.0*			4.2*	4.2*	
7.5	Stabilizers raised			9.5	9.6*	6.6	8.1*	4.8	6.2	3.6	4.7	2.8	3.7	2.1	2.9			1.7	2.4	14.7
	4 pt. outriggers down			9.6*	9.6*	8.1*	8.1*	7.0*	7.0*	6.2*	6.2*	5.5*	5.5*	4.7	5.0*			4.0	4.1*	
6.0	Stabilizers raised	9.9*	9.9*	8.8	10.2*	6.1	7.9	4.5	5.9	3.4	4.5	2.6	3.5	2.0	2.8	1.6	2.2	1.5	2.2	15.1
	4 pt. outriggers down	9.9*	9.9*	10.2*	10.2*	8.4*	8.4*	7.2*	7.2*	6.3*	6.3*	5.6*	5.6*	4.6	5.0*	3.8	4.3*	3.8	4.1*	
4.5	Stabilizers raised	12.1	14.4*	7.8	10.3	5.5	7.3	4.1	5.5	3.2	4.3	2.5	3.4	1.9	2.7	1.5	2.2	1.4	2.1	15.4
	4 pt. outriggers down	14.4*	14.4*	10.9*	10.9*	8.8*	8.8*	7.4*	7.4*	6.4*	6.4*	5.5	5.6*	4.5	5.0*	3.8	4.3*	3.6	4.0*	
3.0	Stabilizers raised	10.0	14.0	6.8	9.2	4.9	6.7	3.7	5.1	2.9	4.0	2.3	3.2	1.8	2.6	1.5	2.1	1.3	2.0	15.6
	4 pt. outriggers down	15.7*	15.7*	11.6*	11.6*	9.2*	9.2*	7.6*	7.6*	6.5*	6.5*	5.3	5.6*	4.4	4.9*	3.7	4.2*	3.5	3.8*	
1.5	Stabilizers raised	5.0*	5.0*	5.8	8.2	4.4	6.1	3.4	4.7	2.7	3.7	2.1	3.0	1.7	2.5	1.4	2.1	1.3	2.0	15.6
	4 pt. outriggers down	5.0*	5.0*	11.9*	11.9*	9.4*	9.4*	7.7*	7.7*	6.3	6.5*	5.2	5.6*	4.3	4.8*	3.7	4.0*	3.5	3.5*	
0	Stabilizers raised	4.2*	4.2*	5.2	7.5	3.9	5.6	3.1	4.4	2.5	3.5	2.0	2.9	1.6	2.4	1.4	2.0	1.3	2.0	15.4
	4 pt. outriggers down	4.2*	4.2*	11.5*	11.5*	9.3*	9.3*	7.6	7.6*	6.1	6.4*	5.0	5.4*	4.2	4.6*	3.6*	3.6*	3.2*	3.2*	
−1.5	Stabilizers raised	4.7*	4.7*	4.8	7.1	3.6	5.3	2.9	4.2	2.3	3.4	1.9	2.8	1.6	2.4			1.4	2.1	14.8
	4 pt. outriggers down	4.7*	4.7*	9.7*	9.7*	8.8*	8.8*	7.2*	7.2*	5.9	6.1*	4.9	5.1*	4.1*	4.1*			3.1*	3.1*	
−3.0	Stabilizers raised			4.7	7.0	3.5	5.1	2.7	4.0	2.2	3.3	1.8	2.7					1.6	2.3	13.5
	4 pt. outriggers down			9.3*	9.3*	7.8*	7.8*	6.5*	6.5*	5.4*	5.4*	4.5*	4.5*					3.4*	3.4*	
−4.5	Stabilizers raised																			
	4 pt. outriggers down																			

Height **Can be slewed through 360°** **In longitudinal position of undercarriage** **Max. reach** *** Limited by hydr. capacity**

The lift capacities on the stick end without attachment are stated in metric tons (t) and are valid on a firm, level supporting surface with blocked oscillating axle. These capacities can be slewed through 360° with the undercarriage in the transverse position. Capacities in the longitudinal position of the undercarriage (±15°) are specified over the steering axle with the stabilizers raised and over the rigid axle with the stabilizers down. Indicated loads based on the ISO 10567 standard and do not exceed 75% of tipping or 87% of hydraulic capacity. The lift capacity values indicated are attained at the corresponding operating temperature. This operating temperature is ensured by continuous movement of the boom. Weights of fitted attachments (grabs, load hooks, etc.) and load accommodation attachment are to be deducted from the lift capacity values. The lift capacity of the unit is limited by its stability, the lifting capability of the hydraulic elements, or the maximum permissible lifting capacity of the load hook.
In accordance with the harmonised European Standard EN 474-5, hydraulic excavators used for lifting operations must be equipped with pipe fracture safety valves, an overload warning device, a load hook and a lift capacity chart.

LH 40 M – Equipment AF15

Industry – Kinematic 2D

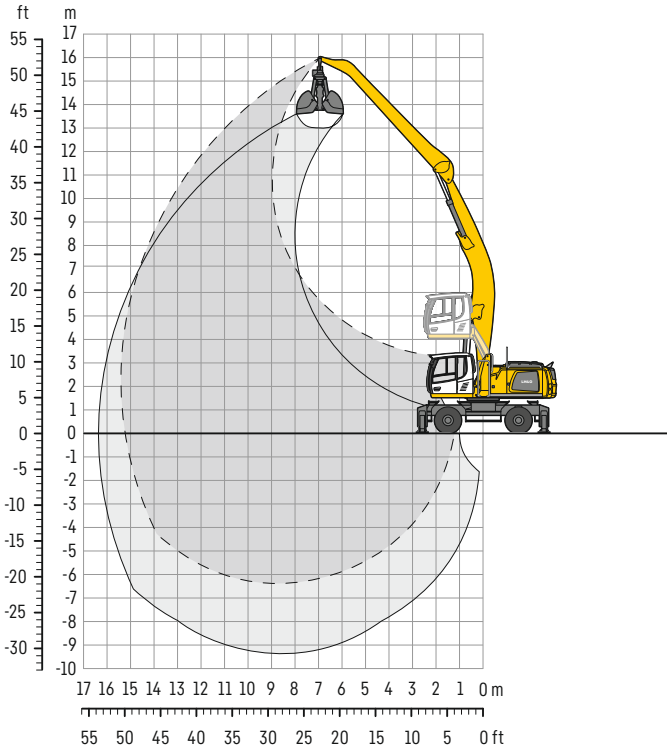

Dimensions

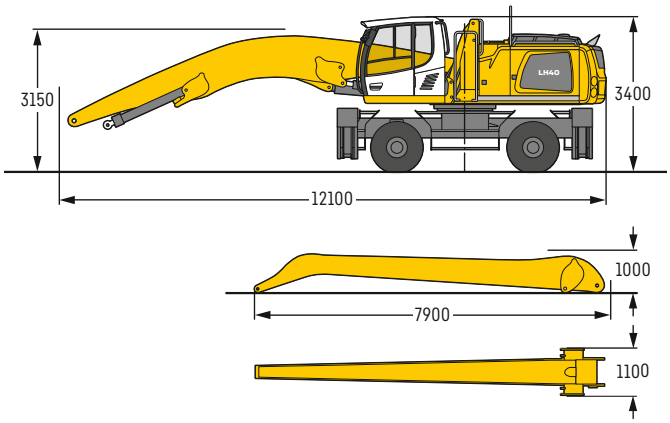

Operating weight

The operating weight includes the basic machine with 4 point outriggers, hydr. cab elevation, 8 solid tyres plus intermediate rings, angled boom 8.60 m, flat angled stick 7.50 m and grab for loose material GMZ 40 / 1.50 m³.

Weight	39,100 kg

m	Undercarriage	4.5 m		6.0 m		7.5 m		9.0 m		10.5 m		12.0 m		13.5 m		15.0 m				m
15.0	Stabilizers raised																	4.7*	4.7*	8.6
	4 pt. outriggers down																	4.7*	4.7*	
13.5	Stabilizers raised							5.4	5.9*									3.9	4.2*	10.5
	4 pt. outriggers down							5.9*	5.9*									4.2*	4.2*	
12.0	Stabilizers raised							5.5	5.7*	4.1	5.2							3.1	4.0*	11.9
	4 pt. outriggers down							5.7*	5.7*	5.3*	5.3*							4.0*	4.0*	
10.5	Stabilizers raised							5.5	5.7*	4.1	5.2*	3.1	4.0					2.5	3.4	13.0
	4 pt. outriggers down							5.7*	5.7*	5.2*	5.2*	4.9*	4.9*					3.8*	3.8*	
9.0	Stabilizers raised							5.5	5.8*	4.1	5.2	3.1	4.0	2.3	3.1			2.2	2.9	13.8
	4 pt. outriggers down							5.8*	5.8*	5.3*	5.3*	4.9*	4.9*	4.3*	4.3*			3.7*	3.7*	
7.5	Stabilizers raised							5.3	5.9*	4.0	5.1	3.0	3.9	2.3	3.1			1.9	2.6	14.5
	4 pt. outriggers down							5.9*	5.9*	5.4*	5.4*	4.9*	4.9*	4.5*	4.5*			3.7*	3.7*	
6.0	Stabilizers raised					6.8	7.0*	5.0	6.2*	3.8	4.9	2.9	3.8	2.2	3.0			1.7	2.4	14.9
	4 pt. outriggers down					7.0*	7.0*	6.2*	6.2*	5.5*	5.5*	5.0*	5.0*	4.6*	4.6*			3.7*	3.7*	
4.5	Stabilizers raised			9.0*	9.0*	6.3	7.5*	4.6	6.0	3.5	4.6	2.7	3.6	2.1	2.9	1.6	2.3	1.6	2.2	15.2
	4 pt. outriggers down			9.0*	9.0*	7.5*	7.5*	6.5*	6.5*	5.7*	5.7*	5.1*	5.1*	4.6*	4.6*	3.9	4.2*	3.8*	3.8*	
3.0	Stabilizers raised	12.1	13.1*	7.9	9.9*	5.6	7.4	4.2	5.6	3.2	4.3	2.5	3.4	2.0	2.8	1.6	2.2	1.5	2.1	15.3
	4 pt. outriggers down	13.1*	13.1*	9.9*	9.9*	8.0*	8.0*	6.8*	6.8*	5.9*	5.9*	5.2*	5.2*	4.6	4.7*	3.8	4.2*	3.7	3.9*	
1.5	Stabilizers raised	10.0	14.0	6.8	9.2	5.0	6.7	3.8	5.1	3.0	4.0	2.3	3.2	1.9	2.6	1.5	2.2	1.4	2.1	15.3
	4 pt. outriggers down	14.7*	14.7*	10.7*	10.7*	8.5*	8.5*	7.1*	7.1*	6.1*	6.1*	5.3*	5.3*	4.5	4.7*	3.8	4.1*	3.6	4.0*	
0	Stabilizers raised	8.4	9.0*	5.9	8.3	4.4	6.1	3.4	4.7	2.7	3.8	2.2	3.1	1.7	2.5	1.4	2.1	1.4	2.1	15.2
	4 pt. outriggers down	9.0*	9.0*	11.3*	11.3*	8.9*	8.9*	7.3*	7.3*	6.2*	6.2*	5.2	5.4*	4.3	4.7*	3.7	4.0*	3.6	3.9*	
−1.5	Stabilizers raised	7.5*	7.5*	5.2	7.6	3.9	5.6	3.1	4.4	2.5	3.5	2.0	2.9	1.6	2.4			1.4	2.1	14.9
	4 pt. outriggers down	7.5*	7.5*	11.4*	11.4*	9.0*	9.0*	7.4*	7.4*	6.1	6.2*	5.0	5.3*	4.2	4.5*			3.7	3.8*	
−3.0	Stabilizers raised	7.1	7.4*	4.9	7.2	3.7	5.3	2.9	4.2	2.3	3.4	1.9	2.8	1.6	2.4			1.4	2.2	14.4
	4 pt. outriggers down	7.4*	7.4*	11.0*	11.0*	8.8*	8.8*	7.2*	7.2*	5.9	6.0*	4.9	5.1*	4.2	4.2*			3.6*	3.6*	
−4.5	Stabilizers raised	7.0	7.9*	4.7	7.0	3.5	5.2	2.8	4.1	2.2	3.3	1.9	2.8	1.6	2.4			1.6	2.3	13.6
	4 pt. outriggers down	7.9*	7.9*	10.0*	10.0*	8.1*	8.1*	6.7*	6.7*	5.6*	5.6*	4.6*	4.6*	3.5*	3.5*			3.5*	3.5*	
−6.0	Stabilizers raised					3.5	5.2	2.7	4.0	2.2	3.3							2.1	3.1	11.0
	4 pt. outriggers down					7.0*	7.0*	5.8*	5.8*	4.7*	4.7*							4.4*	4.4*	

Height **Can be slewed through 360°** **In longitudinal position of undercarriage** **Max. reach** *** Limited by hydr. capacity**

The lift capacities on the stick end without attachment are stated in metric tons (t) and are valid on a firm, level supporting surface with blocked oscillating axle. These capacities can be slewed through 360° with the undercarriage in the transverse position. Capacities in the longitudinal position of the undercarriage (±15°) are specified over the steering axle with the stabilizers raised and over the rigid axle with the stabilizers down. Indicated loads based on the ISO 10567 standard and do not exceed 75% of tipping or 87% of hydraulic capacity. The lift capacity values indicated are attained at the corresponding operating temperature. This operating temperature is ensured by continuous movement of the boom. Weights of fitted attachments (grabs, load hooks, etc.) and load accommodation attachment are to be deducted from the lift capacity values. The lift capacity of the unit is limited by its stability, the lifting capability of the hydraulic elements, or the maximum permissible lifting capacity of the load hook. In accordance with the harmonised European Standard EN 474-5, hydraulic excavators used for lifting operations must be equipped with pipe fracture safety valves, an overload warning device, a load hook and a lift capacity chart.

LH 40 C – Equipment GA16

Industry – Kinematic 2A

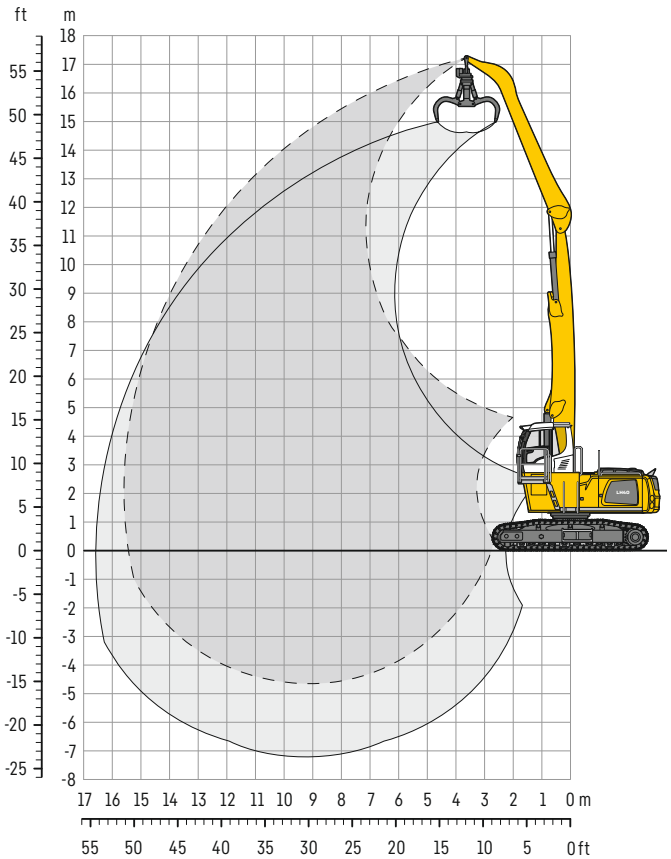

Dimensions

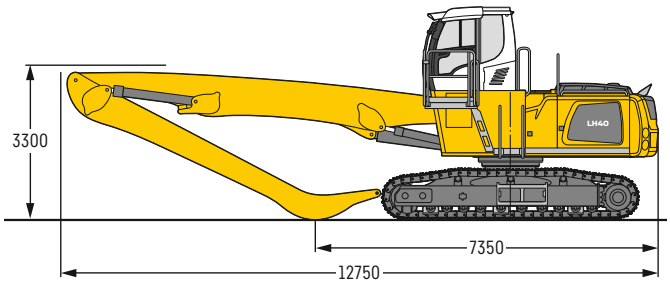

Operating weight and ground pressure

The operating weight includes the basic machine with rigid cab elevation, straight boom 9.10 m, angled stick 6.80 m and multi-tine grab GM 65 / 0.60 m³ semi-closed tines.

Weight	40,100 kg
Pad width	600 mm
Ground pressure	on request

m	Undercarriage	4.5 m		6.0 m		7.5 m		9.0 m		10.5 m		12.0 m		13.5 m		15.0 m				m
16.5	EW																	7.2*	7.2*	5.9
15.0	EW					7.4*	7.4*											5.7*	5.7*	8.7
13.5	EW					7.9*	7.9*	7.0*	7.0*	5.2*	5.2*							5.0*	5.0*	10.6
12.0	EW					7.8*	7.8*	6.8*	6.8*	6.1*	6.1*	4.7*	4.7*					4.6*	4.6*	12.0
10.5	EW					7.7*	7.7*	6.8*	6.8*	6.1*	6.1*	5.5*	5.5*					4.4*	4.4*	13.1
9.0	EW					7.8*	7.8*	6.8*	6.8*	6.1*	6.1*	5.5*	5.5*	4.8	5.0*			4.2*	4.2*	14.0
7.5	EW					8.1*	8.1*	7.0*	7.0*	6.2*	6.2*	5.5*	5.5*	4.8	5.0*			4.1	4.1*	14.6
6.0	EW			10.2*	10.2*	8.4*	8.4*	7.2*	7.2*	6.3*	6.3*	5.6*	5.6*	4.7	5.0*	3.9	4.3*	3.9	4.1*	15.1
4.5	EW	14.3*	14.3*	10.8*	10.8*	8.8*	8.8*	7.4*	7.4*	6.4*	6.4*	5.6	5.6*	4.6	5.0*	3.9	4.3*	3.7	4.1*	15.4
3.0	EW	15.6*	15.6*	11.5*	11.5*	9.1*	9.1*	7.6*	7.6*	6.5*	6.5*	5.4	5.6*	4.5	4.9*	3.8	4.2*	3.6	3.8*	15.5
1.5	EW	5.3*	5.3*	11.9*	11.9*	9.4*	9.4*	7.7*	7.7*	6.4	6.5*	5.3	5.6*	4.4	4.8*	3.8	4.0*	3.5	3.6*	15.6
0	EW	4.2*	4.2*	11.7*	11.7*	9.3*	9.3*	7.6*	7.6*	6.2	6.4*	5.1	5.4*	4.3	4.6*	3.6*	3.6*	3.2*	3.2*	15.4
−1.5	EW	4.6*	4.6*	9.7*	9.7*	8.9*	8.9*	7.3*	7.3*	6.0	6.1*	5.0	5.1*	4.2*	4.2*			3.0*	3.0*	15.0
−3.0	EW			9.5*	9.5*	7.9*	7.9*	6.6*	6.6*	5.5*	5.5*	4.5*	4.5*	3.5*	3.5*			3.4*	3.4*	13.7
−4.5	EW							5.5*	5.5*	4.6*	4.6*							4.5*	4.5*	10.6

Height **Can be slewed through 360°** **In longitudinal position of undercarriage** **Max. reach** *** Limited by hydr. capacity**

The lift capacities on the stick end without attachment are stated in metric tons (t) and can be slewed through 360° on a firm, level supporting surface. Capacities are valid for 600 mm wide triple grouser pads (resp. flat pads). Indicated loads based on the ISO 10567 standard and do not exceed 75 % of tipping or 87 % of hydraulic capacity. The lift capacity values indicated are attained at the corresponding operating temperature. This operating temperature is ensured by continuous movement of the boom. Weights of fitted attachments (grabs, load hooks, etc.) and load accommodation attachment are to be deducted from the lift capacity values. The lift capacity of the unit is limited by its stability, the lifting capability of the hydraulic elements, or the maximum permissible lifting capacity of the load hook. In accordance with the harmonised European Standard EN 474-5, hydraulic excavators used for lifting operations must be equipped with pipe fracture safety valves, an overload warning device, a load hook and a lift capacity chart.

LH 40 C – Equipment AF15

Industry – Kinematic 2D

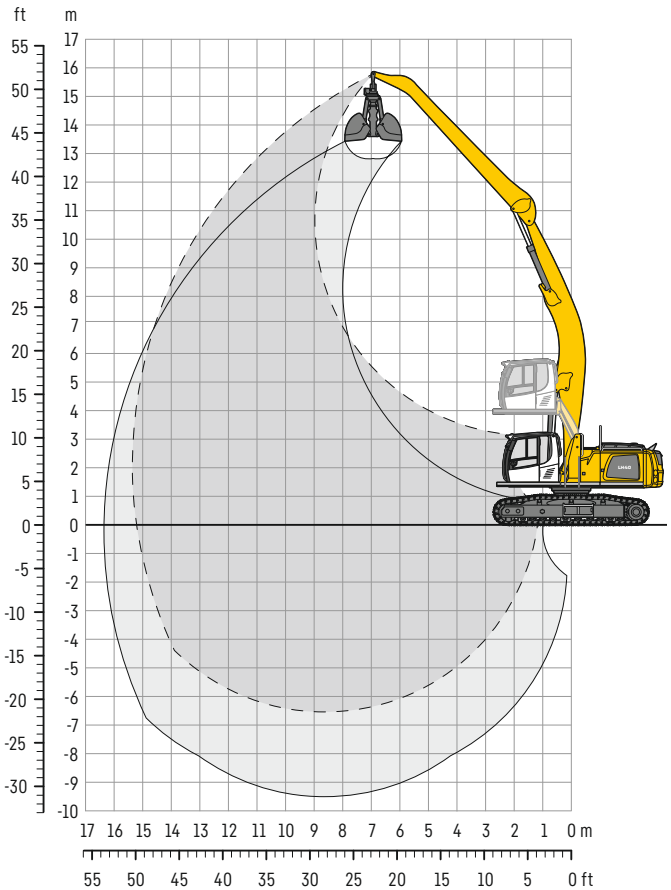

Dimensions

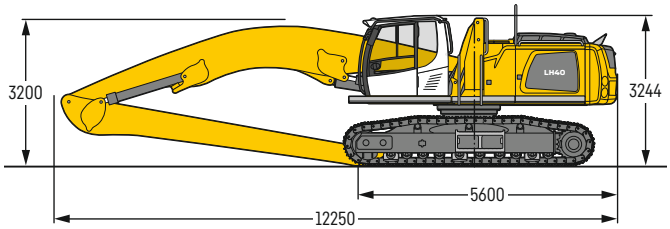

Operating weight and ground pressure

The operating weight includes the basic machine with hydr. cab elevation, angled boom 8.60 m, flat angled stick 7.50 m and grab for loose material GMZ 40 / 1.50 m³.

Weight	41,000 kg
Pad width	600 mm
Ground pressure	on request

m	Undercarriage	4.5 m		6.0 m		7.5 m		9.0 m		10.5 m		12.0 m		13.5 m		15.0 m				m
15.0	EW																	4.8*	4.8*	**8.3**
13.5	EW							5.8*	5.8*									4.3*	4.3*	**10.3**
12.0	EW							5.6*	5.6*	5.2*	5.2*							4.0*	4.0*	**11.8**
10.5	EW							5.6*	5.6*	5.1*	5.1*	4.7*	4.7*					3.8*	3.8*	**12.9**
9.0	EW							5.6*	5.6*	5.1*	5.1*	4.7*	4.7*	4.2*	4.2*			3.7*	3.7*	**13.7**
7.5	EW							5.8*	5.8*	5.2*	5.2*	4.8*	4.8*	4.4*	4.4*			3.7*	3.7*	**14.4**
6.0	EW					6.8*	6.8*	6.0*	6.0*	5.3*	5.3*	4.8*	4.8*	4.4*	4.4*			3.7*	3.7*	**14.9**
4.5	EW			8.7*	8.7*	7.3*	7.3*	6.3*	6.3*	5.5*	5.5*	4.9*	4.9*	4.4*	4.4*	4.0*	4.0*	3.7*	3.7*	**15.2**
3.0	EW	12.6*	12.6*	9.6*	9.6*	7.8*	7.8*	6.6*	6.6*	5.7*	5.7*	5.0*	5.0*	4.4*	4.4*	3.9*	3.9*	3.8	3.8*	**15.3**
1.5	EW	14.0*	14.0*	10.3*	10.3*	8.2*	8.2*	6.8*	6.8*	5.8*	5.8*	5.1*	5.1*	4.4*	4.4*	3.8*	3.8*	3.7*	3.7*	**15.4**
0	EW	9.4*	9.4*	10.7*	10.7*	8.4*	8.4*	6.9*	6.9*	5.9*	5.9*	5.1*	5.1*	4.4*	4.4*	3.7*	3.7*	3.6*	3.6*	**15.2**
−1.5	EW	7.5*	7.5*	10.7*	10.7*	8.5*	8.5*	6.9*	6.9*	5.8*	5.8*	5.0*	5.0*	4.2*	4.2*			3.4*	3.4*	**14.9**
−3.0	EW	7.4*	7.4*	10.2*	10.2*	8.2*	8.2*	6.7*	6.7*	5.6*	5.6*	4.7*	4.7*	3.9*	3.9*			3.2*	3.2*	**14.5**
−4.5	EW	7.8*	7.8*	9.2*	9.2*	7.5*	7.5*	6.2*	6.2*	5.1*	5.1*	4.2*	4.2*	3.2*	3.2*			3.0*	3.0*	**13.8**
−6.0	EW			7.7*	7.7*	6.4*	6.4*	5.3*	5.3*	4.3*	4.3*							3.7*	3.7*	**11.4**

Height **Can be slewed through 360°** **In longitudinal position of undercarriage** **Max. reach** *** Limited by hydr. capacity**

The lift capacities on the stick end without attachment are stated in metric tons (t) and can be slewed through 360° on a firm, level supporting surface. Capacities are valid for 600 mm wide triple grouser pads (resp. flat pads). Indicated loads based on the ISO 10567 standard and do not exceed 75 % of tipping or 87 % of hydraulic capacity. The lift capacity values indicated are attained at the corresponding operating temperature. This operating temperature is ensured by continuous movement of the boom. Weights of fitted attachments (grabs, load hooks, etc.) and load accommodation attachment are to be deducted from the lift capacity values. The lift capacity of the unit is limited by its stability, the lifting capability of the hydraulic elements, or the maximum permissible lifting capacity of the load hook. In accordance with the harmonised European Standard EN 474-5, hydraulic excavators used for lifting operations must be equipped with pipe fracture safety valves, an overload warning device, a load hook and a lift capacity chart.

Kinematic variants

Kinematic variant 2A

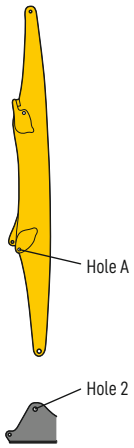

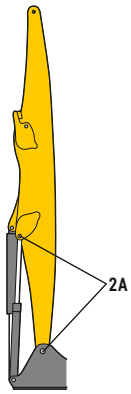

Energy recovery with kinematic variant **2A**

Kinematic variant 2D / 2C

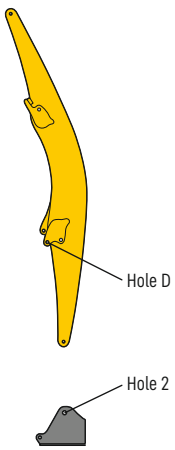

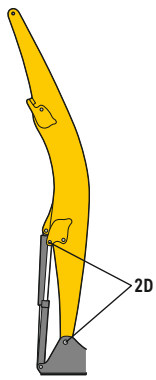

Energy recovery with kinematic variant **2D**

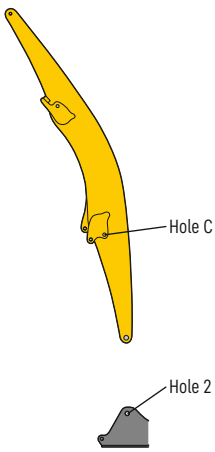

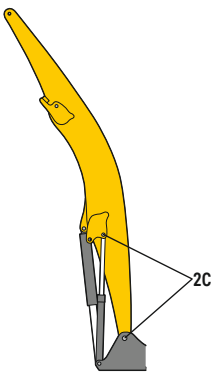

Energy recovery with kinematic variant **2C**

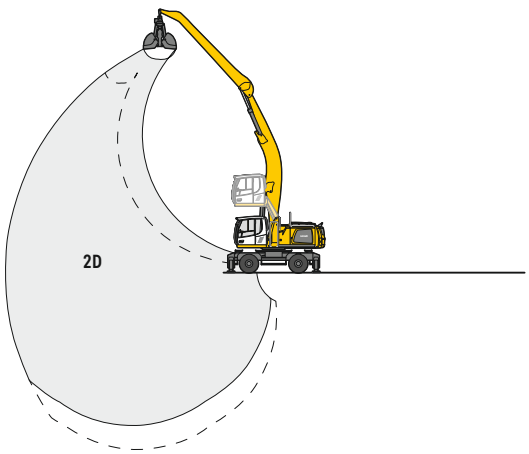

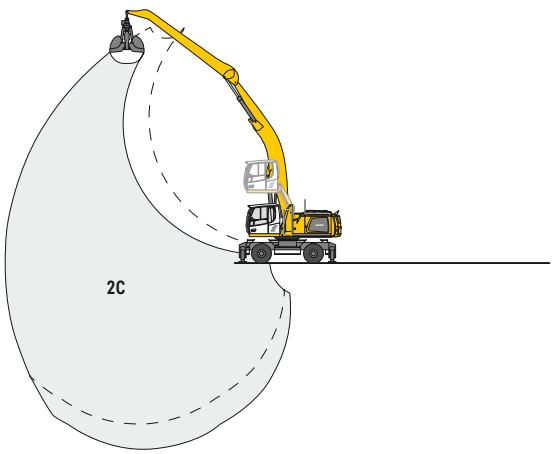

Altered range curve with additional reach depth, e.g. for unloading from ships

Liebherr ERC-System

More performance, less consumption
Lowering the equipment stores energy in the ERC-System. This stored energy is then made available to the machine to provide additional engine power. When the equipment is raised the stored energy is released and is reflected in powerful, homogeneous operating cycles. The result is a clear energy saving – and, at the same time, even greater performance.

System performance
The energy recovery cylinder is a storage system which is independent of the electric motor or diesel engine. The system performance of material handling machines fitted with the ERC-System is composed of the installed engine power and the energy recovery cylinder. When the equipment is raised, energy from the ERC-System is supplied in addition to the power from the engine.

ERC-System

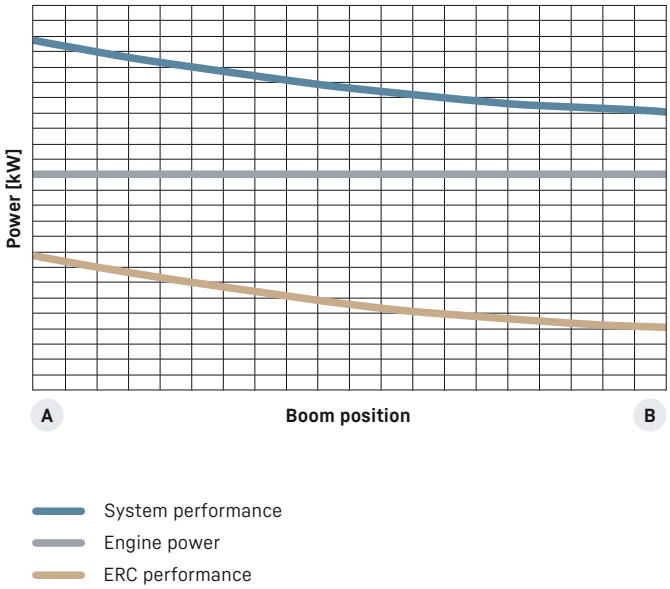

B 1. Equipment fitting raised / energy released

2. Lower equipment fitting / store energy
4. Raise equipment fitting / release energy

A 3. Equipment fitting lowered / energy stored

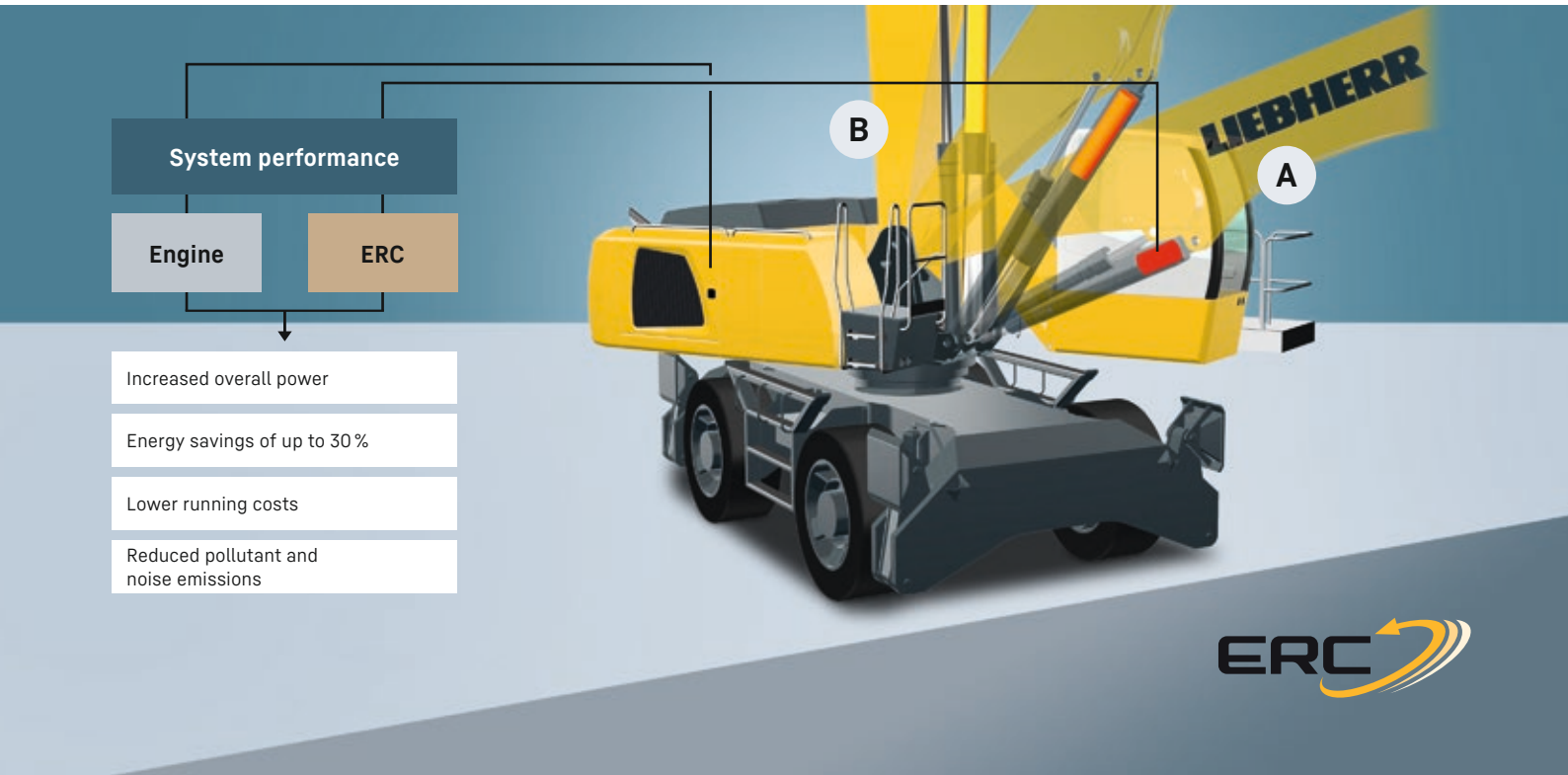

Attachments

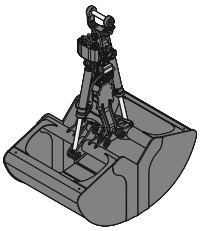

Grab for loose material

Grab model GMZ 40											
Shell specification		Standard				Wide					
Width of shells	mm	1,190	1,500	1,750	1,900	1,190	1,500	1,750	2,000	2,250	2,500
Capacity	m³	2.10	2.50	3.00	3.50	1.20	1.50	1.75	2.00	2.25	2.50
Weight	kg	1,740	1,885	2,005	2,080	1,540	1,665	1,770	1,875	2,050	2,155

Multi-tine grab

		open			semi-closed			closed, heart-shaped		
Grab model GMM 50-4 (4 tines)										
Capacity	m³	0.70	0.90	1.10	0.70	0.90	1.10	0.70	0.90	1.10
Weight	kg	1,410	1,525	1,535	1,480	1,605	1,635	1,650	1,785	1,810
Grab model GMM 50-5 (5 tines)										
Capacity	m³	0.70	0.90	1.10	0.70	0.90	1.10	0.70	0.90	1.10
Weight	kg	1,620	1,760	1,770	1,695	1,845	1,875	1,790	1,950	1,955

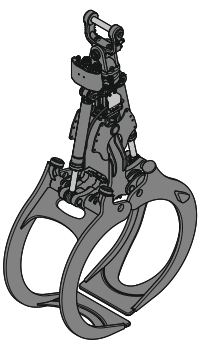

Wood grab

Grab model GMH 40[1] – round overlapping (vertical cylinders)							
Size	m²	1.00	1.30	1.50	1.70	1.90	
Cutting width	mm	810	810	810	810	810	
Height of grab, closed	mm	2,576	2,679	2,723	2,816	2,900	
Weight	kg	1,575	1,605	1,655	1,660	1,790	
Grab model GMH 40[1] – straight design, overlapping (vertical cylinders)							
Size	m²	1.00	1.30	1.50	1.70		
Cutting width	mm	810	810	810	810		
Height of grab, closed	mm	2,554	2,642	2,732	2,789		
Weight	kg	1,600	1,630	1,690	1,735		
Grab model GMH 40 – heart-shaped, tip-to-tip closing, straight design (vertical cylinders)							
Size	m²	1.30	1.60[2]	1.60[2]	1.60	1.90[2]	1.90
Cutting width	mm	770	770	870	870	870	870
Height of grab, closed	mm	2,921	3,018	3,018	3,018	3,151	3,151
Weight	kg	1,635	1,770	1,810	1,745	1,945	1,830

[1] wood tongs of the GM 20B
[2] closed back sheet

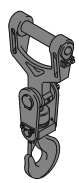

Load hook

Max. load	t	12.5
Height with suspension	mm	930
Weight	kg	135

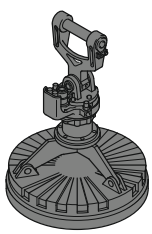

Magnet devices / lifting magnets

Generator	kW	13 / 20	13 / 20
Electromagnet with suspension			
Power	kW	8.8	10
Diameter of magnet	mm	1,250	1,350
Weight	kg	1,310[1]	1,700[1]

[1] only magnet plate

Equipment

Undercarriage	40 M	40 C
Stabilizer assistant	+	
Individual control, four outriggers	+	
Piston rod guard for front and rear outriggers	●	
Shuttle axle lock, automatic	●	
Rear and front outriggers	●	
Twin tyres, Liebherr solid tyres, 12.00-20	●	
D6C chains 600 mm triple grouser track pads		●
D6C chains 600 mm flat track pads welded with bezel		+
Chain guide 2 pieces		●
Central cab access (storage compartment on both sides)	●	
Lubrication undercarriage (decentral), manual (grease points)	●	

Uppercarriage	40 M	40 C
Hydraulic oil, Liebherr hydraulic HVI (– 20 to + 40 °C)	●	●
Reversible fan drive	●	●
Air pre-filter with cyclonical dust trap	●	●
Preheating hydraulic oil	+	+
Preheating fuel	●	●
Preheating coolant	+	+
Preheating engine oil	+	+
Generator Liebherr 20 kW, hydraulic	+	+
Extended tool kit including toolbox	●	●
Rear view monitoring with camera	●	●
Headlights on uppercarriage, rear, LED, 2 pieces	+	
Headlight on uppercarriage, right, LED, 1 piece	●	●
Side view monitoring with camera	●	●
Automatic central lubrication system, uppercarriage and equipment	●	●

Equipment	40 M	40 C
AutoLift	+	+
Energy recovery cylinder filled with gas	●	●
Piston rod guard for energy recovery cylinder	●	●
Pipe fracture safety valves stick cylinders	●	●
Headlights on boom, halogen, 2 pieces	●	●
Headlights on boom, LED, 2 pieces	+	+
Stick camera (bottom belt)	+	+
Headlights on stick, halogen, 2 pieces	●	●
Headlights on stick, LED, 2 pieces	+	+
Retract stick without pressure	●	●

Cab	40 M	40 C
Cab elevation LHC 255	●	●
Operator's seat Comfort	●	●
Travel alarm system, switchable	+	+
Footrest	●	●
Joystick steering	●	
Automatic air conditioning	●	●
LiDAT, vehicle fleet management	●	●
Radio Comfort	●	●
Sun visor	●	●
Roof window, laminated safety glass impact-resistant	●	●
Windscreen, laminated safety glass impact-resistant, one piece	●	●
Licence plate holder with light	+	
Headlights on cab, front, halogen, 2 pieces (under rain shield)	●	●
Headlights on cab, front, LED, 2 pieces	+	+
FGPS front guard and FOPS top guard	●	●
Side windows, laminated glass	●	●

Control	40 M	40 C
Adjustable lowering speed for hoist and stick cylinders	●	●
Boom shut-down (retraction / extention)	●	●
Pressure warning mechanism hoist cylinder	●	●
Boom cylinder cushioning	●	●
Stick shut-down (retraction / extention)	●	●
Overload warning device, switchable	●	
Stabilizer, control lever, left console	●	
Horn, button on left joystick	●	●
Proportional control (left / right)	●	●

● = Standard, + = Option
* = country-dependent

Options and / or special equipment, supplied by vendors other than Liebherr, are only to be installed with the knowledge and approval of Liebherr in order to retain warranty.

The Liebherr Group

Global and independent: more than 70 years of success
Liebherr was founded in 1949 when, with the development of the world's first mobile tower crane, Hans Liebherr laid the foundations for a family-run company which now has more than 50,000 employees and comprises over 150 companies across every continent. The holding company of the Group is Liebherr-International AG in Bulle, Switzerland, whose shareholders are exclusively members of the Liebherr family.

Technology leadership and pioneering spirit
Liebherr is a pioneer and its forward-looking approach has seen it make important contributions to technology history over a wide variety of industries. Employees throughout the world continue to share the courage of the company founder, sharing a passion to produce innovative products and a determination to provide world-leading equipment and machinery.

Diversified product programme
Liebherr is one of the world's biggest construction machine manufacturers and provides high-quality, user-oriented products and services. Its product programme includes earthmoving machinery, material handling technology, deep foundation machines, mining, mobile and crawler cranes, tower cranes, concrete technology, maritime cranes, aerospace and transportation systems, gear technology and automation systems, refrigerators and freezers, components and hotels.

Customised solutions and maximum customer value
Liebherr solutions are characterised by precision, implementation and longevity. The company is committed to technological excellence and to providing customers with solutions that match their needs exactly. For Liebherr, customer focus does not end with delivery of a product but continues through a comprehensive range of back-up and support services.

www.liebherr.com

Liebherr-Hydraulikbagger GmbH
Liebherrstraße 12 · 88457 Kirchdorf (Iller), Germany · Phone +49 7354 80-0
info.lhb@liebherr.com · www.liebherr.com · www.facebook.com/LiebherrConstruction

 Printed in China · RG-BK · LHB/PMKT-14500555-10.24_enGB